# ANALYSES

OF THE

# SAMPLES OF IRON ORE COLLECTED FOR THE TENTH CENSUS

AND

# DESCRIBED IN THE PRECEDING NOTES.

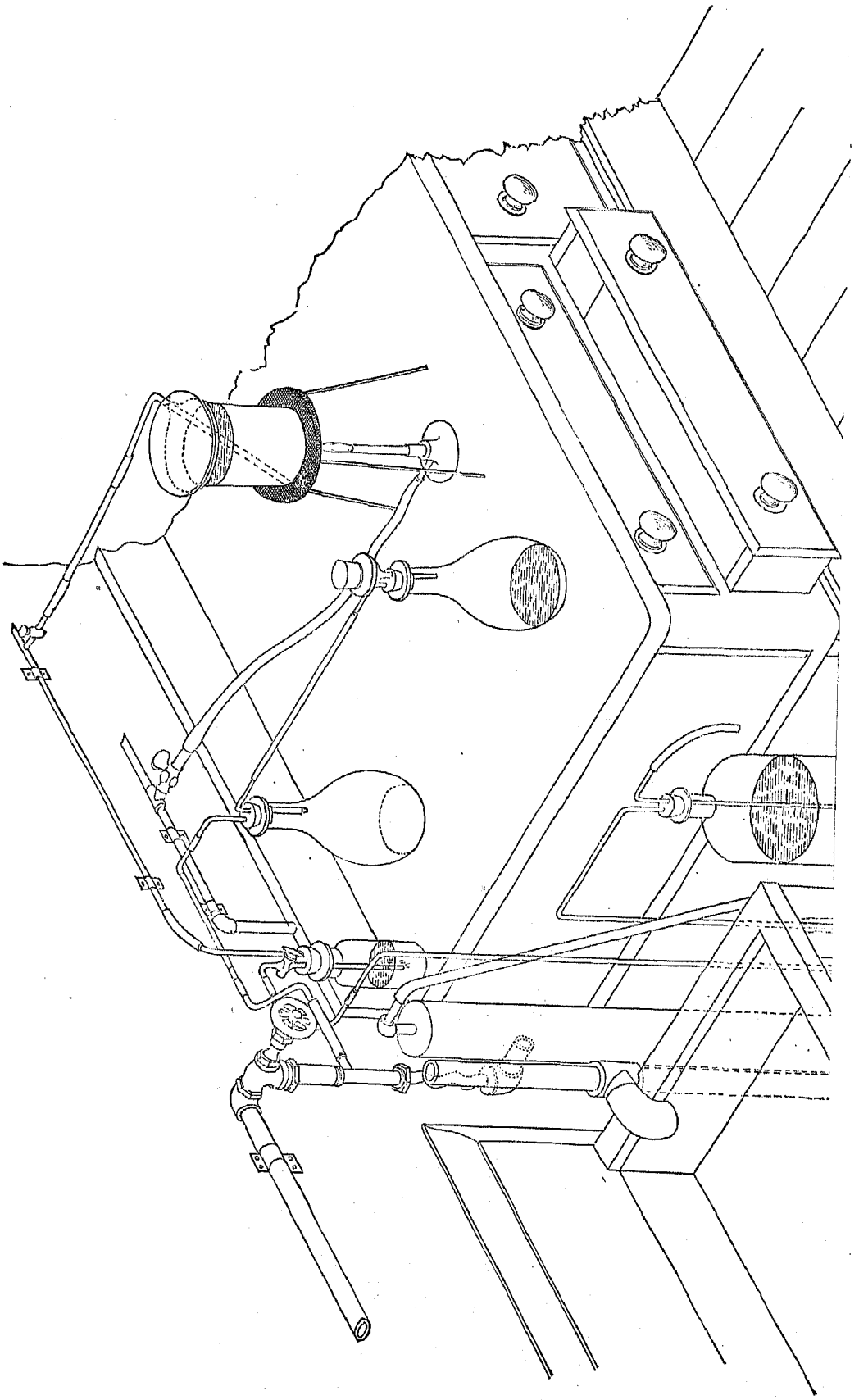

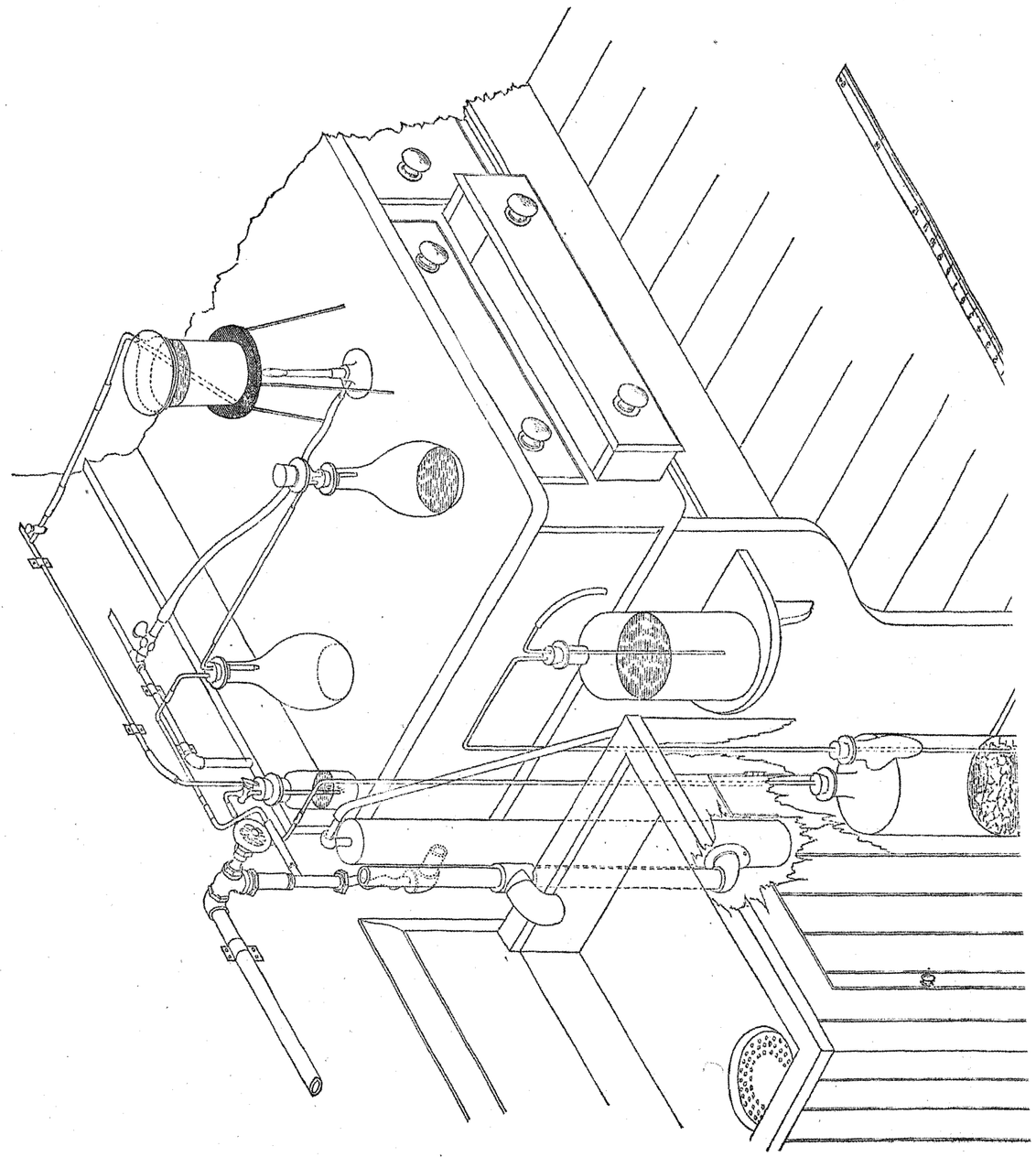

# THE METHODS EMPLOYED IN THE ANALYSIS OF THE IRON ORES,

TOGETHER WITH A

## SKETCH OF THE VARIOUS METHODS PROPOSED FOR THE DETERMINATION OF PHOSPHORIC ACID.

By A. A. Blair.

The treatment of samples of iron ore naturally divides itself into two parts, the mechanical and the chemical, and it will be described under these heads. The care with which the identity of every sample was preserved throughout will be shown, and the methods, by which the determination of the different elements was rendered as accurate as the state of chemical knowledge would allow, will be given in detail.

### THE MECHANICAL TREATMENT.

The sample was first taken from the bag and placed upon a large piece of clean strong paper, and the label was removed from the box and put in a little card-rack fixed over the bench. Half a dozen small chips, representing as nearly as possible the different varieties of the ore, were put aside and carefully labeled, to be used for specific-gravity determinations, and for thin sections for the microscope.

The large steel mortar, Fig. 227, was half filled with the ore, the leather cover was adjusted, and the machinery was started. This mortar was cast at the Midvale Steel Works of Philadelphia, and was made of an exceptionally fine quality of propeller steel, containing over 1 per cent. of carbon and about fifteen thousandths of 1 per cent. of phosphorus. The pestle was forged and hardened, and the wear, after crushing between 15,000 and 20,000 pounds of ore, was scarcely perceptible in either mortar or pestle. The mortar weighed about 70 pounds, and the pestle with the stem and weight about 25 pounds. The tappets *a* were faced with raw-hide, which stood the wear of the cams H remarkably well, much better than either hard or soft iron or steel, the dust from the ore causing the latter to cut very fast. The shaft made about 90 revolutions per minute, and the ore, when the mortar was about half filled, fed itself, so that without any attention 25 pounds of hard ore in lumps was reduced almost to powder in about one and a half hour.

The stem B was hooked up so that the pestle cleared the top of the mortar A. The pulley D raised the mortar clear of the block, and by means of the traveler E the mortar was emptied on the chilled-iron plate F, as figured in the sketch. The ore was ground to a fine powder on this chilled plate by the hardened steel muller C, any of it falling off the plate being caught in the sheet-iron troughs G. It was thoroughly mixed and quartered, and the resulting sample, reduced finally to about 6 to 8 ounces, was placed in a clean, dry bottle. This bottle had the number of the sample etched upon it, the same number, in figures half an inch high, pasted on the neck, and the label which came in the sample bag pasted on its side. The bottle was not taken into the grinding-room until the sample was being ground, and was always previously numbered, so that when it was brought up-stairs with the label the numbers could be compared and the label pasted on. A portion of the sample was ground in the agate mortar A (Fig. 228) with an agate pestle, B, fitted in a flexible shaft, C, and revolving at the rate of 700 times a minute, transferred to a ground-glass stoppered bottle, and dried at 100° C. It was then ready for analysis.

### THE CHEMICAL TREATMENT.

#### DETERMINATION OF PHOSPHORIC ACID.

For ores low in phosphoric acid 10 grams were dissolved in HCl, the solution was evaporated to dryness on the sand-bath, redissolved in dilute HCl (one part of acid to two of water), filtered, the filtrate treated with 10 c.c. $NH_4HSO_3$ (*a*) to reduce the iron to the ferrous condition, $NH_4HO$ added until the solution was nearly neutral, and

*a* Made by saturating $NH_4HO$ with $SO_2$, generated by heating powdered charcoal and strong $H_2SO_4$ in a flask. The mixture was made of the consistency of cream, and the gas passed first through a wash-bottle containing water.

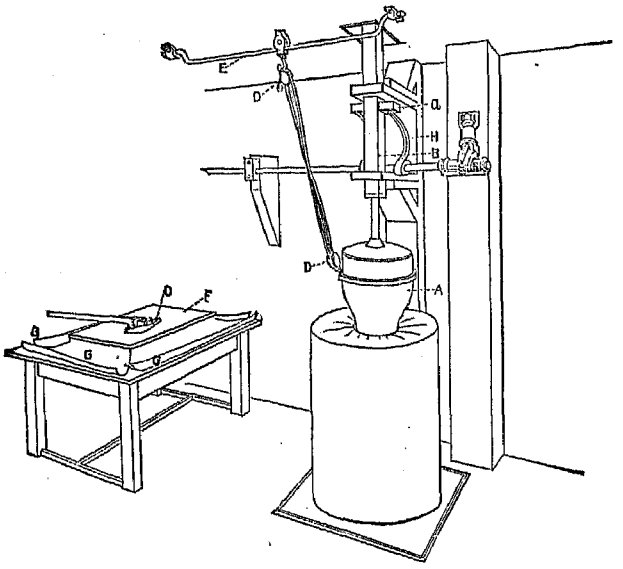


FIG. 227.—CHILLED PLATE AND STEEL MORTAR.

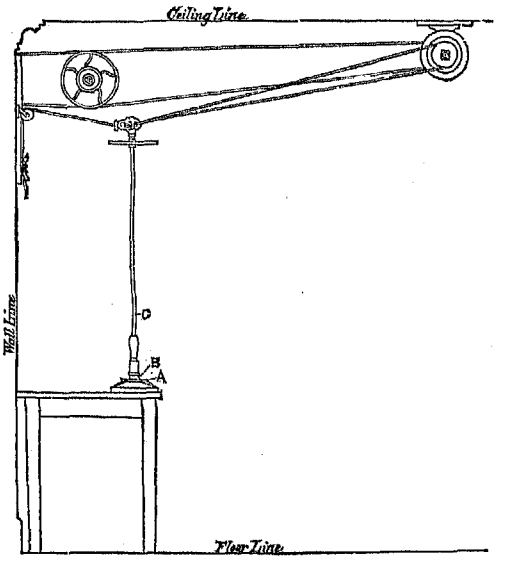


FIG. 228.—AGATE MORTAR WITH FLEXIBLE SHAFT.

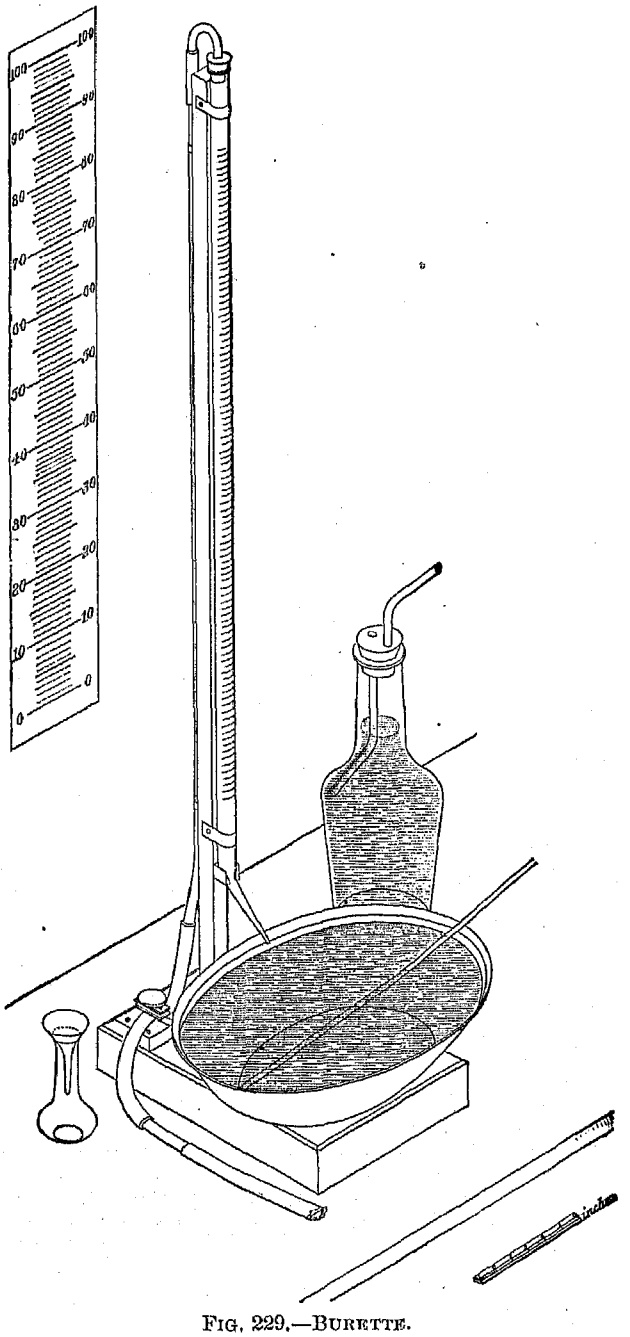


FIG. 229.—BURETTE.

then heated until it was decolorized. Five c.c. of strong HCl were added to decompose any excess of $NH_4HSO_3$, and the $SO_2$ driven off by passing $CO_2$ through the boiling solution. When the last trace of $SO_2$ was driven off, $H_2S$ was passed through the boiling solution to precipitate any arsenic, the sulphide of arsenic filtered off, the beaker placed in cold water, and, when thoroughly cooled, dilute $NH_4HO$ added until a slight permanent green precipitate of ferrous hydrate remained after stirring. Acetic acid was added until this precipitate dissolved (a few drops should be sufficient), the solution diluted with hot water to about 800 or 900 c.c., and if the precipitate was white, a dilute solution of ferric chloride or bromine water was added until it became red. If it was necessary to add much ferric chloride, a few drops of ammonic acetate were also added to insure the decomposition of all the former salt. The solution was then heated to boiling, boiled a few minutes, filtered rapidly, and washed once with hot water. The filtrate should pass through the filter perfectly clear, and if the precipitate is red, any subsequent cloudiness of the filtrate is of no consequence. If, however, the filtrate passes the filter cloudy, it should be returned to the main portion, a few drops more of ferric chloride added, and the solution again boiled and filtered. The precipitate of ferric phosphate, hydrate, and basic acetate was dissolved in hot dilute HCl (1–1) on the filter, and the large beaker cleared of any adhering precipitate with HCl; the whole solution and washings were received in a small beaker and evaporated nearly to dryness. Five to ten grams of citric acid were dissolved in the least possible quantity of hot water, and filtered into a small beaker, into which were also filtered about 5 c.c. of magnesium mixture, (*a*) and the whole was added to the solution of the ferric phosphate. This solution was then neutralized by $NH_4HO$ and cooled. When perfectly cold, from one-third to one-half its bulk of strong $NH_4HO$ was added, and the solution was stirred until the precipitate of $Mg_2(NH_4)_2P_2O_8$ began to form. After standing for some time, the solution was stirred again, and the stirring was repeated at intervals for an hour. It was allowed to settle over night, filtered on the asbestos felt in Dr. Gooch's pierced crucible, washed with dilute $NH_4HO$ (1–3), dried on the pump, moistened with a drop or two of $NH_4NO_3$ in ammonia, dried and ignited until the glow passed over the precipitate, cooled in a desiccator and weighed as $Mg_2P_2O_7$. This precipitate was then dissolved in dilute hot HCl, the felt was washed on the pump, and the crucible was heated to redness and reweighed. This weight, unless the precipitate of $Mg_2P_2O_7$ contained $SiO_2$, agreed perfectly with the original weight. In the latter case, however, the last weight of the crucible was subtracted from the weight of the crucible with the precipitate, to obtain the weight of $Mg_2P_2O_7$. The table A was used for calculating the percentage of $P_2O_5$, or P, instead of the factors 0.6396 or 0.2793.

TABLE 24—FOR PHOSPHORUS AND PHOSPHORIC ACID.

| Mg | P | $P_2O_5$ | Mg | P | $P_2O_5$ | Mg | P | $P_2O_5$ | Mg | P | $P_2O_5$ |
|---|---|---|---|---|---|---|---|---|---|---|---|
| 1 | 0.003 | 0.006 | 26 | 0.073 | 0.166 | 51 | 0.142 | 0.326 | 76 | 0.212 | 0.486 |
| 2 | 0.005 | 0.013 | 27 | 0.075 | 0.173 | 52 | 0.145 | 0.332 | 77 | 0.215 | 0.492 |
| 3 | 0.008 | 0.019 | 28 | 0.078 | 0.179 | 53 | 0.148 | 0.339 | 78 | 0.218 | 0.499 |
| 4 | 0.011 | 0.026 | 29 | 0.081 | 0.185 | 54 | 0.151 | 0.345 | 79 | 0.221 | 0.505 |
| 5 | 0.014 | 0.032 | 30 | 0.084 | 0.192 | 55 | 0.154 | 0.352 | 80 | 0.223 | 0.512 |
| 6 | 0.017 | 0.038 | 31 | 0.086 | 0.198 | 56 | 0.156 | 0.358 | 81 | 0.226 | 0.518 |
| 7 | 0.019 | 0.045 | 32 | 0.089 | 0.204 | 57 | 0.159 | 0.364 | 82 | 0.229 | 0.524 |
| 8 | 0.022 | 0.051 | 33 | 0.092 | 0.211 | 58 | 0.162 | 0.371 | 83 | 0.232 | 0.531 |
| 9 | 0.025 | 0.057 | 34 | 0.095 | 0.217 | 59 | 0.165 | 0.377 | 84 | 0.235 | 0.537 |
| 10 | 0.028 | 0.064 | 35 | 0.098 | 0.224 | 60 | 0.167 | 0.384 | 85 | 0.237 | 0.544 |
| 11 | 0.031 | 0.070 | 36 | 0.100 | 0.230 | 61 | 0.170 | 0.390 | 86 | 0.240 | 0.550 |
| 12 | 0.033 | 0.077 | 37 | 0.103 | 0.237 | 62 | 0.173 | 0.396 | 87 | 0.243 | 0.556 |
| 13 | 0.036 | 0.083 | 38 | 0.106 | 0.243 | 63 | 0.176 | 0.403 | 88 | 0.246 | 0.563 |
| 14 | 0.039 | 0.089 | 39 | 0.109 | 0.249 | 64 | 0.179 | 0.409 | 89 | 0.248 | 0.569 |
| 15 | 0.042 | 0.096 | 40 | 0.112 | 0.256 | 65 | 0.181 | 0.416 | 90 | 0.251 | 0.576 |
| 16 | 0.045 | 0.102 | 41 | 0.114 | 0.262 | 66 | 0.184 | 0.422 | 91 | 0.254 | 0.582 |
| 17 | 0.047 | 0.108 | 42 | 0.117 | 0.269 | 67 | 0.187 | 0.428 | 92 | 0.257 | 0.588 |
| 18 | 0.050 | 0.115 | 43 | 0.120 | 0.275 | 68 | 0.190 | 0.434 | 93 | 0.259 | 0.595 |
| 19 | 0.053 | 0.121 | 44 | 0.123 | 0.281 | 69 | 0.193 | 0.441 | 94 | 0.262 | 0.601 |
| 20 | 0.056 | 0.128 | 45 | 0.126 | 0.287 | 70 | 0.195 | 0.448 | 95 | 0.265 | 0.607 |
| 21 | 0.059 | 0.134 | 46 | 0.128 | 0.294 | 71 | 0.198 | 0.454 | 96 | 0.268 | 0.614 |
| 22 | 0.061 | 0.141 | 47 | 0.131 | 0.300 | 72 | 0.201 | 0.460 | 97 | 0.271 | 0.620 |
| 23 | 0.064 | 0.147 | 48 | 0.134 | 0.307 | 73 | 0.204 | 0.467 | 98 | 0.274 | 0.627 |
| 24 | 0.067 | 0.153 | 49 | 0.137 | 0.313 | 74 | 0.207 | 0.473 | 99 | 0.276 | 0.633 |
| 25 | 0.070 | 0.159 | 50 | 0.139 | 0.319 | 75 | 0.209 | 0.479 | 100 | 0.279 | 0.639 |

When the amount of $Mg_2(NH_4)_2P_2O_8$ was large it was dissolved, boiled, and reprecipitated, as a small amount of MgO was liable to be carried down mechanically with it. It was found necessary to avoid heating the $Mg_2P_2O_7$ after the glow had passed, as this salt is liable to attack the asbestos slightly at high temperatures, causing a small loss in weight of the felt on the subsequent solution of the precipitate in dilute HCl. For ores containing $TiO_2$ it was necessary to modify this process in several particulars. It was found that under certain

*a* Made by dissolving equal weights of $MgCl_2$ and $NH_4Cl$ in the least possible quantity of water, filtering, adding ⅓ bulk of $NH_4HO$, stirring occasionally, and allowing it to stand for some days before using.

circumstances phosphoric acid combined with $TiO_2$ forming a salt (possibly a phospho-titanate) very insoluble in HCl, so that in almost every instance phosphoric acid was found in the insoluble siliceous residue when this contained titanic acid. Also, upon neutralizing the main solution, after adding $NH_4HSO_3$ in ores containing $TiO_2$, a fine white precipitate resembling $BaSO_4$ was formed, which usually remained after the subsequent addition of HCl, and was found to consist of $TiO_2$ with some $P_2O_5$. If, after dissolving the precipitate of ferric phosphate, etc., thrown down by ammonic acetate, the solution was allowed to run to dryness, there was found after re-solution in HCl, a granular white or yellowish residue, absolutely insoluble in HCl, which consisted essentially of $TiO_2$ and $P_2O_5$. This reaction affords a very delicate test for $TiO_2$, for if the residue obtained in this latter case be collected on a small filter, dried, ignited, and fused with $Na_2CO_3$ and the fusion treated with hot water, a residue of $NaTiO_3$ will remain, which is insoluble in water. This residue, collected on a small filter, dissolved in a little hot dilute HCl and treated with Zn in a test-tube, gives the very characteristic violet color due to $Ti_2O_3$.

When $TiO_2$ was found it was necessary to fuse the insoluble silicious residue, the residue left in the filter from the solution of the precipitate by ammonic acetate, and the residue left from the re-solution of this latter after it had run to dryness, with $Na_2CO_3$. The fused mass was treated with hot water and filtered; the filtrate containing, besides silica and alumina and sodic carbonate, all the $P_2O_5$, while the $TiO_2$ remained on the filter as sodic titanate, insoluble in water. Potassium salts should not be used, as potassic titanate is decomposed by water. The filtrate was acidulated with HCl evaporated to dryness, dissolved in water with a little HCl, filtered, a few drops of solution of $Fe_2Cl_6$ added, and the ferric phosphate precipitated by ammonic acetate. This precipitate was filtered, washed, dissolved in HCl, and the $P_2O_5$ was determined by magnesium mixture as usual.

### SULPHUR AND IRON.

One gram of ore was fused with 10–12 grams of $Na_2CO_3$ and a little $KNO_3$, the fused mass was run well up on the sides of the crucible and the crucible was chilled. The mass was then detached from the crucible and transferred to a tall beaker, or the crucible with its contents was placed in the beaker and treated with boiling water. When the fused mass was entirely disintegrated (the crucible, if placed in the beaker, having been washed off and removed) the ferric oxide was allowed to settle. If the solution was colored by alkaline manganate a few drops of alcohol were added and the solution was allowed to stand until the color disappeared. If the solution after the disappearance of the color due to the manganate was yellow, it was an indication of the presence of $Cr_2O_3$ in the ore. It was then decanted through a filter and washed twice with hot water by decantation.

The filter was washed once or twice with hot water, and the filtrate was acidulated with HCl evaporated to dryness, redissolved in hot water with a few drops of HCl, filtered from the $SiO_2$ and the sulphuric acid precipitated by $BaCl_2$ in the boiling filtrate. After standing over night in a warm place the $BaSO_4$ was filtered on the felt, washed thoroughly with hot water (and ammonic acetate, if it was large), and weighed as $BaSO_4$, which, multiplied by 0.1373, gave the S.

The crucible in which the fusion was made was treated with HCl, and when the adhering $Fe_2O_3$ was dissolved a little hot water was added and the whole was poured on the filter to dissolve any $Fe_2O_3$ which might have been in suspension in the solution of the fused mass. This was allowed to run into the beaker containing the $Fe_2O_3$, the crucible was rinsed, and the filter was washed with hot water. The whole was evaporated to dryness to render $SiO_2$ insoluble, redissolved in HCl, and transferred to a small flask of about 50 c.c. capacity. A small funnel was put in the neck of the flask and 3 grams of granulated zinc in small lumps were added carefully to the solution. By heating the solution and adding a few drops of HCl from time to time, the ferric chloride was soon reduced to ferrous, which was shown by the solution becoming colorless. After washing down the neck of the flask and the funnel with a fine jet of water, if the addition of a few drops of HCl failed to impart any color to the solution, the reduction was considered complete. Fifteen c.c. of dilute $H_2SO_4$ (1–1) were added, little by little, to the solution, and when the zinc had all dissolved, the neck of the flask and the funnel were carefully washed down and the flask was filled nearly to the top with hot water. The flask was then placed in cold water, and when the solution was thoroughly cooled it was washed out into an oblong white dish of about 1,500 c.c. capacity and diluted to about one liter. A solution of permanganate of potassa was run in from a burette the representation of which is given in Fig. 229.

This form of burette, the invention of Mr. Thomas H. Garrett, is the most satisfactory one I have ever used. The solution of permanganate was carefully standardized by means of ferric chloride of known strength, made by dissolving wrought iron of known composition in $HNO_3$, driving off the nitric acid by repeated evaporations with HCl, diluting, filtering into a clean glass-stoppered bottle, and determining the $Fe_2O_3$ gravimetrically in a weighed amount of the solution. The strength of the ferric-chloride solution being thus accurately known, a portion was weighed out into one of the little flasks previously mentioned, reduced with zinc, sulphuric acid added, and the strength of the permanganate solution determined by titration. The amount of the solution necessary to color 3 grams of zinc treated with HCl and $H_2SO_4$, and diluted to the same volume as the solution of the ore, was subtracted before calculating the value of the permanganate solution, and also from the amount of permanganate solution required for the ore before calculating the percentage of iron. By using $H_2SO_4$ in addition to the HCl, as

described above, it was found that the end reaction with potassic permanganate was as sharp as if no HCl was used, and the results obtained were in all cases as accurate as could be desired. For many ores it was possible to dissolve the finely-ground sample directly in the flask in HCl without previous fusion, but for those containing ferrous silicates, or pyrites, it was generally necessary to resort to fusion for the accurate determination of the total Fe.

### SILICA, FERRIC OXIDE, ALUMINA, MANGANESE, LIME, AND MAGNESIA.

One gram was dissolved in HCl, evaporated to dryness, redissolved in dilute HCl, and evaporated a second time to render the silica insoluble. It was then redissolved in HCl and water (1–3), filtered on a small ashless filter, washed, dried, ignited, and weighed as insoluble siliceous matter. This was fused with five times its weight of dry $Na_2CO_3$, treated with hot water, and washed into a platinum dish, the crucible treated with acid and carefully rinsed into the dish, the whole acidulated with HCl, evaporated to dryness, treated with water and a little HCl, and evaporated again to dryness. The mass was then treated with HCl and water (1–5) heated to boiling, and filtered on a small ashless filter. The filter was dried, ignited, and weighed. The silica was treated in the crucible with HFl (*a*) and $H_2SO_4$, evaporated to dryness, ignited, and weighed. The difference between this and the weight of the precipitate was $SiO_2$. Any residue obtained by the treatment with HFl and $H_2SO_4$ was examined. It might consist of $BaSO_4$ or $TiO_2$, if either of these existed in the ore, or of a little alumina or ferric oxide, or of a small amount of $Na_2SO_4$ if the silica was not carefully washed. The filtrate from the silica was treated in a platinum dish with $NH_4HO$, boiled until it smelled but faintly of $NH_3$, filtered, washed, dried, ignited, and weighed as $Al_2O_3$, with or without a tinge of $Fe_2O_3$. To the filtrate, ammonic oxalate was added, the solution was boiled and allowed to stand over night, filtered, washed, and ignited at a high temperature and weighed as CaO.

This filtrate was evaporated down, $NaNH_4HPO_4$ was added, and the solution was well stirred to precipitate the $Mg_2(NH_4)_2P_2O_8$. After standing over night it was filtered, washed, ignited, and weighed as $Mg_2P_2O_7$. Whence 111 : 40=weight of $Mg_2P_2O_7$ : weight of MgO. The sum of the weights of the $SiO_2$, $Al_2O_3$, CaO, and MgO should about equal that of the insoluble siliceous matter. When there was a deficiency, alkalies were looked for in another portion. If there was an excess, and the precipitate $Al_2O_3$ was red, FeO in insoluble matter was determined. (See p. 515.)

The filtrate from the insoluble siliceous matter was nearly neutralized with $Na_2CO_3$ solution, 2 grams of sodic acetate were added, and the whole, after being diluted to about 700 c.c. with hot water, was boiled and the precipitated ferric oxide, etc., was filtered on a washed filter. The precipitate was washed two or three times on the filter and then transferred back to the beaker with a platinum spatula, the filter was washed with HCl and finally with water, the whole being received in the beaker with the mass of the precipitate. Sufficient acid was added to dissolve the precipitate, and the operation was repeated, the filtrates being added together. The solution of the precipitated ferric oxide, etc., was evaporated to dryness to render insoluble any $SiO_2$ from the reagents; redissolved in dilute acid and filtered into a large platinum dish, the solution was boiled, $NH_4HO$ was added, and the precipitate was collected on an ashless filter, washed thoroughly on the pump with hot water, dried, ignited (finally over the blast), and weighed as $Fe_2O_3Al_2O_3P_2O_5$. The filtrates from the acetate precipitations were evaporated down to about 300 c.c., 2 or 3 grams of sodic acetate were added, the solution was heated to boiling, and $H_2S$ was passed through to precipitate any Cu, Ni, Co, and Zn.

The precipitate by $H_2S$ was filtered off, and after all smell of $H_2S$ had been boiled off, bromine water was added to the solution. When the precipitated manganic oxide had collected at a gentle heat, and while the solution was still colored by bromine, it was boiled until colorless, filtered, washed several times, and the manganic oxide was dissolved on the filter in HCl, with the addition of solution of $H_2SO_3$, which caused its very rapid solution. This solution was evaporated to dryness, redissolved in HCl and water, a slight excess of $NH_4HO$ was added, nearly all smell of $NH_3$ was boiled off, the solution was filtered, any slight precipitate of $Fe_2O_3$, etc., was redissolved, and reprecipitated and filtered as before. The filtrates were added together and excess of $Na(NH_4)HPO_4$ was added with enough HCl to render the solution decidedly acid, and after boiling for some time, an excess of $NH_4HO$ was added to precipitate the $Mn_2(NH_4)_2P_2O_8$. This was boiled until the precipitate became crystalline and the solution smelled but slightly of $NH_3$, when it was filtered, washed with cold water, ignited, and weighed as $Mn_2P_2O_7$, which, multiplied by 0.5, gave MnO.

To the filtrate, from the precipitate of manganic oxide by bromine, was added the ammoniacal filtrate from the final precipitation of the $Fe_2O_3$, $Al_2O_3$, and $P_2O_5$; the whole was evaporated down to about 400 c.c., and the lime and magnesia were precipitated as described in the analysis of the insoluble siliceous matter. There were several sources of error which it was found very necessary to guard against in the above analysis, namely, the contamination of the distilled water by silica when it was boiled in glass, the strong action of ammoniacal solutions on the beakers, and the presence of silica, alumina, ferric oxide, lime, and magnesia in many reagents, and especially in sodic carbonate. Distilled water which had been heated over night in a Bohemian flask on the sand-bath was found to

*a* The HFl was redistilled with the addition of a little $H_2SO_4$ and potassic permanganate from a platinum still and collected in a platinum bottle, as the crude HFl always contained ferric oxide, beside various sulphur compounds.

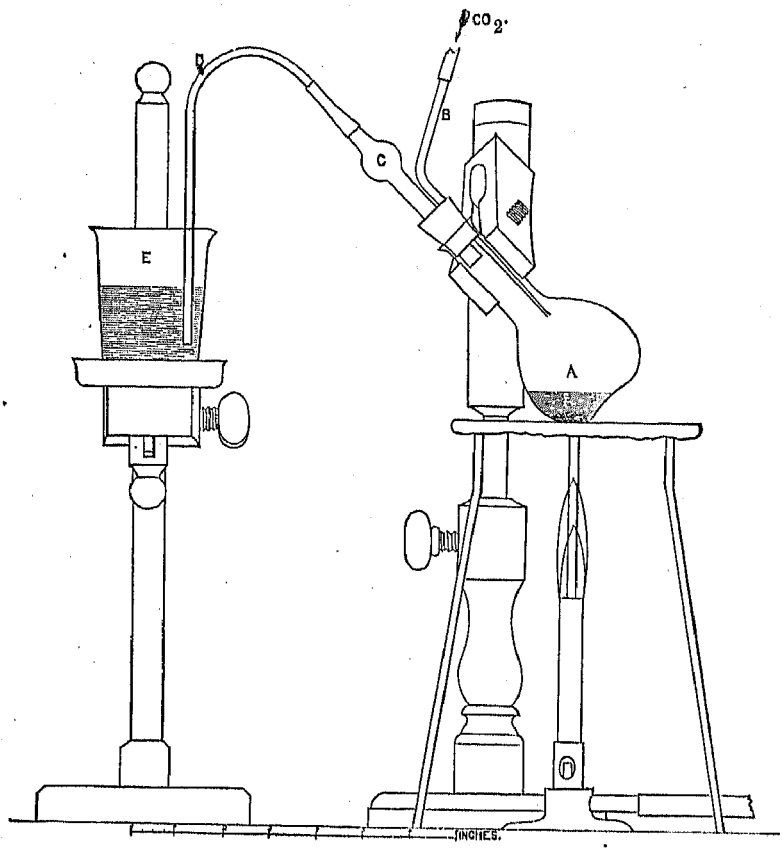


FIG. 230.—APPARATUS FOR DETERMINATION OF FeO SOLUBLE IN HCl.

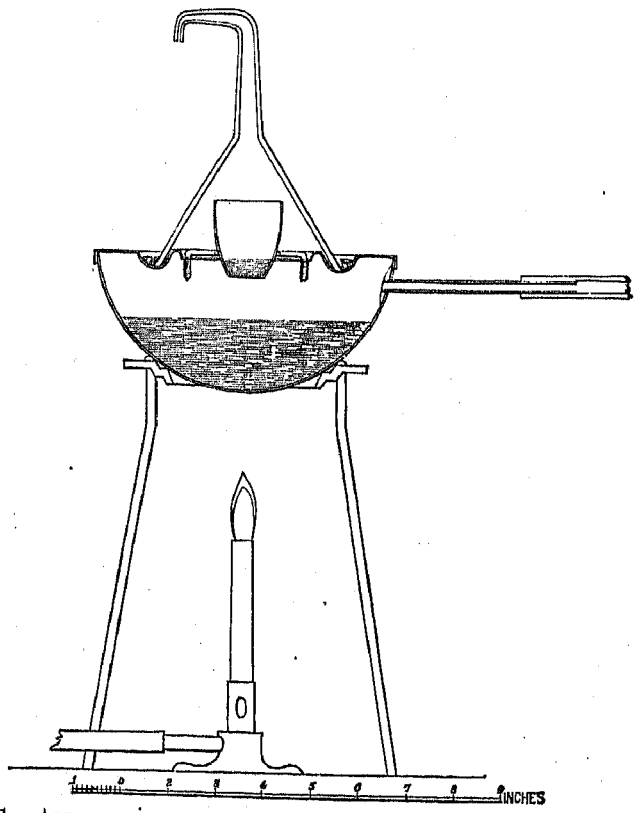


FIG. 231.—APPARATUS FOR DETERMINATION OF FeO IN INSOLUBLE RESIDUE.

contain 52 milligrams of solid residue to the liter, 26 milligrams of which was $SiO_2$; and $Fe_2O_3$ precipitated from a solution to which water boiled in a flask from 2 to 6 hours had been added, contained after ignition as much as 3 per cent. of $SiO_2$. To avoid this, tin-lined copper flasks were used for heating distilled water, and to avoid the error due to the action of ammonia salts and ammoniacal solutions on the beakers, all the precipitations and evaporations were made in platinum. We were fortunate enough to obtain some remarkably pure sodic carbonate containing only 2 milligrams of $SiO_2$, 1½ milligrams of $Al_2O_3$, 2 milligrams of CaO, and 2 milligrams of MgO to the 100 grams, from Messrs. Powers & Weightman, Philadelphia.

### NICKEL, COBALT, AND ZINC.

Three grams of ore were treated as if for the determination of manganese and the sulphides of Cu, Ni, Co, Zn were precipitated from the boiling solution of the acetates by $H_2S$. This precipitate was collected on a small filter, washed with $H_2S$ water containing a little acetic acid, dried, ignited in a porcelain crucible, and transferred to a small beaker. It was then treated with HCl and a little $HNO_3$, evaporated to dryness, redissolved in HCl, diluted, boiled, and the Cu was precipitated by $H_2S$. The CuS was filtered off and washed with hot water, the filtrate containing the Co, Ni, and Zn was evaporated to dryness, redissolved in a few drops of water containing not more than two or three drops of HCl, and an excess of $K_2NO_2$ acidulated with acetic acid added. After standing for a day or two the potassic cobaltic nitrite was filtered off, washed once or twice with a strong solution of potassic acetate, and then, after removing the filtrate, with alcohol to displace the alkaline salts. The precipitate was then ignited very carefully in a porcelain crucible, treated with $H_2SO_4$ to decompose all the nitrite, made alkaline with $NH_4HO$, filtered, and the Co was precipitated by the battery; or the ignited precipitate was dissolved in a few drops of HCl, transferred to a small beaker, diluted, and any $Al_2O_3$ and $Fe_2O_3$ present was precipitated by boiling for several hours with an excess of sodic acetate. The precipitate of $Fe_2O_3$ and $Al_2O_3$ was filtered off, the filtrate was made alkaline with ammonia, and the cobalt was precipitated as sulphide by $NH_4HS$. The precipitate was allowed to settle, filtered off on a small ashless filter, washed, dried, ignited, and weighed as $Co_2S$, or treated with $H_2SO_4$ and zinc and weighed as $CoS_4$, which, multiplied by 0.4872, gave CoO.

The filtrate from the potassic cobaltic nitrite was acidulated strongly with HCl and heated to decompose all the nitrite, and the NiO was precipitated by an excess of NaHO or KHO, filtered, and the filtrate was tested for ZnO with $NH_4HS$. If any ZnS was found, the NiO was redissolved and precipitated as before, filtered, and the filtrate and washings were added to the first filtrate, the ZnS was allowed to settle, filtered, washed with water containing $NH_4HS$, redissolved in HCl, and evaporated to dryness. This was treated with dilute HCl, filtered, and the zinc was precipitated by solution of $Na_2CO_3$, filtered, washed, dried, ignited, and weighed as ZnO.

The precipitate of NiO was dissolved on the filter in HCl, the filtrate run to dryness with $H_2SO_4$, diluted, excess of $NH_4HO$ was added, filtered, and the Ni precipitated by the battery; or the HCl solution was evaporated to dryness, dissolved in a drop or two of HCl, diluted, and boiled with an excess of sodic acetate. Any precipitate of $Al_2O_3$, etc., was filtered off, excess of $NH_4HS$ was added, then an excess of acetic acid and $H_2S$ was passed through the boiling solution. The precipitated NiS and S were collected on a small ashless filter, dried, ignited, heated with a little ammonic carbonate, and weighed as $Ni_2S$.

### DETERMINATION OF FERROUS OXIDE.

One gram of finely-ground ore was weighed into a flask A (Fig. 230), of about 100 c.c. capacity, fitted with a rubber stopper, through which passed two glass tubes, as shown in the cut. Dry $CO_2$ was passed in through the tube B, to expel the air through the tubes C and D, the latter dipping beneath the surface of the water in the beaker E, and when this was accomplished the stopper was removed, 15 c.c. of strong HCl was quickly poured in, the stopper was replaced, and the ore was dissolved with the aid of heat, the current of $CO_2$ being continued uninterruptedly. When the solution of the ore was accomplished the source of heat was removed, and the current of $CO_2$ being temporarily stopped, the water in the beaker B was allowed to run back into the flask A until the latter was nearly filled, when the current of $CO_2$ was turned on again and allowed to continue until the solution in the flask was thoroughly cooled. This was accomplished by removing the tripod C, placing a dish nearly filled with cold water under the flask, and replacing the tripod. The solution was then washed out into the dish used for titrating, into which 3 grams of zinc dissolved in 15 c.c. of the dilute $H_2SO_4$ (1–1) were previously poured, and the whole was diluted to 1 liter. The amount of ferrous oxide was then determined by the potassic permanganate solution. The amount of solution required to color about 1 gram of ferric chloride diluted to the same bulk and containing the same amount of $H_2SO_4$ was subtracted from the amount required for the titration before calculating the amount of ferrous oxide.

### FERROUS OXIDE IN INSOLUBLE SILICEOUS MATTER.

When the insoluble siliceous matter contained iron in the ferrous condition, for instance, in the form of epidote, 1 gram was treated with HCl diluted, and the insoluble matter was collected on the felt in a pierced crucible, carefully dried, transferred with the felt to an ordinary platinum crucible, and treated, in the apparatus of Fig. 231,

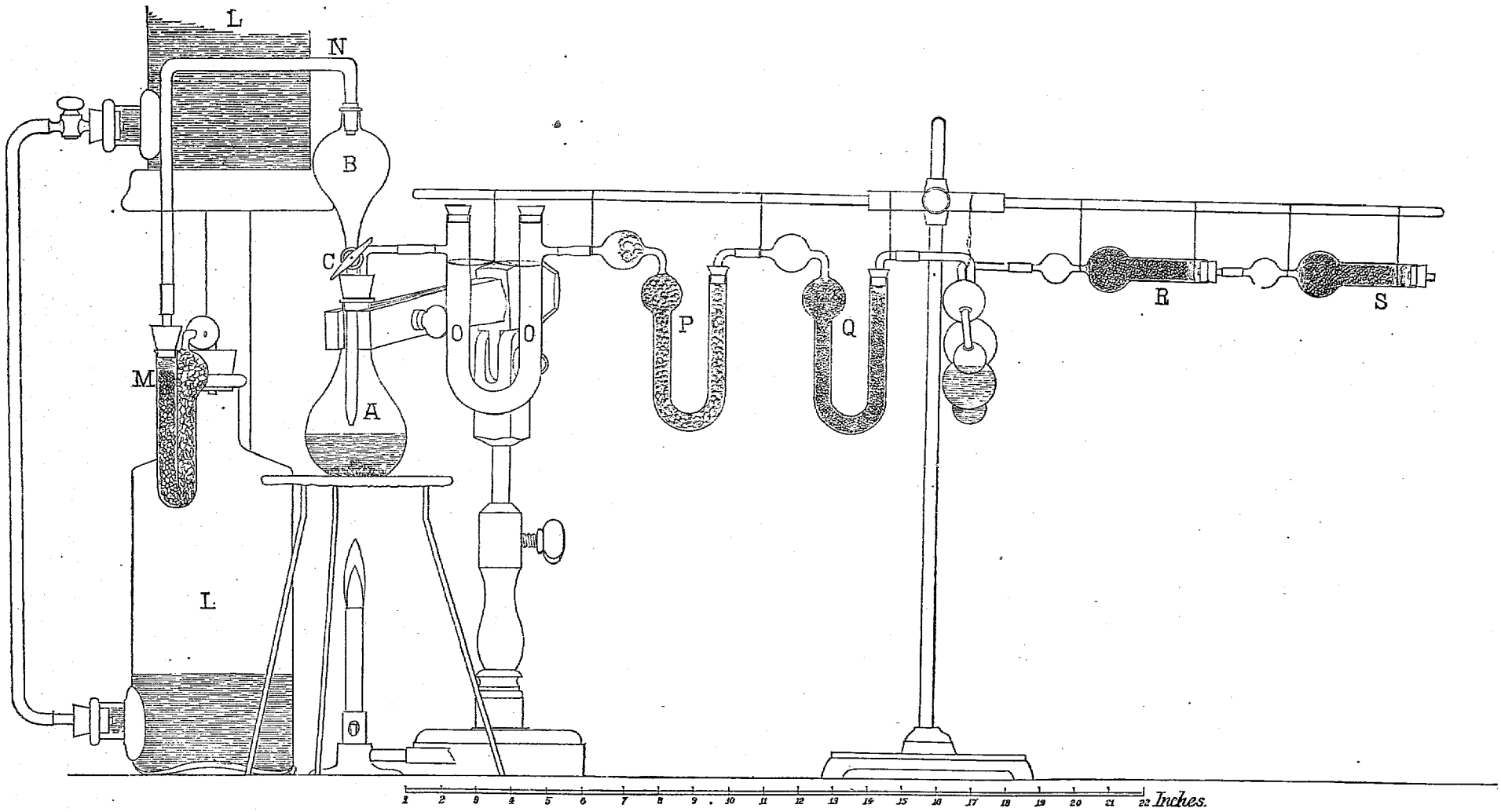


FIG. 232.—APPARATUS FOR DETERMINATION OF $CO_2$ IN IRON ORES.

with HFl and HCl in a current of $CO_2$. When entirely decomposed it was allowed to cool, the current of $CO_2$ being kept up, and then transferred quickly to a dish containing about 1 liter of water and 15 c.c. of the dilute $H_2SO_4$ and zinc, the crucible was washed out, and the amount of FeO was determined by the standard solution of potassic permaganate.

### SULPHURIC ACID.

Sulphuric acid may exist in the ore in the form of baric sulphate, calcic sulphate, or as sulphates of iron, etc., formed in the roasting or weathering of an ore containing pyrites. When it existed as baric sulphate it was found, in the analysis of the insoluble siliceous matter, in the residue remaining after the treatment of the silica with HFl. In this case the residue was fused with $Na_2CO_3$, treated with hot water and filtered. The filtrate was acidulated with HCl and the sulphuric acid was precipitated by baric chloride and determined as $BaSO_4$, which, multiplied by 0.3433, gave $SO_3$.

The baric carbonate on the filter was dissolved in dilute HCl, $H_2SO_4$ was added, and the $BaSO_4$ was finally weighed, which, multiplied by 0.6567, gave BaO. In the other cases 10 grams of the ore finely ground were treated with water containing a little HCl, filtered, the sulphuric acid was precipitated in the filtrate as $BaSO_4$, and the weight was determined with the usual precautions.

### ALUMINA.

The total amount of the soluble $Fe_2O_3+Al_2O_3+P_2O_5$ was added to the $Al_2O_3+Fe_2O_3$ found in the insoluble siliceous matter, and from this was subtracted the $P_2O_5$, which gave the total, $Fe_2O_3+Al_2O_3$. From this was subtracted the $Fe_2O_3$ found by titration; the difference was $Al_2O_3$. The accuracy of this result depended, of course, upon that of the volumetric determination of the $Fe_2O_3$. The comparison of many analyses showed that the error due to this need never exceed a few hundredths of 1 per cent., and no direct method was found to yield results equally accurate or concordant.

### CALCULATION OF THE ANALYSIS.

The S in the sulphuric acid found as such was subtracted from the total S; so much as was necessary to form the sulphides of Cu, Ni, Co, Zn, Sb with the amounts of these elements in the ore, and supposed to exist in this condition, was subtracted from this, and the remaining sulphur was calculated to $FeS_2$. The amount of Fe required for this was calculated to $Fe_2O_3$, and subtracted from the $Fe_2O_3$ found by titration. From this was taken the amount of $Fe_2O_3$ calculated from the FeO found in the determination of ferrous oxide, and the result was the amount of $Fe_2O_3$ existing in this state in the ore.

### CARBONIC ACID.

Three grams of ore were weighed into the flask A of the apparatus (Fig. 232), and the connections were made as there shown; 10 c.c. of strong $H_2SO_4$ were added to 65 c.c. of water and poured into the bulb-tube B, the stop-cock C having first been closed. After the potash bulb and the drying tube were weighed they were attached to the apparatus, the tube S was filled with fused $CaCl_2$, being added to prevent the drying tube R from absorbing moisture from the atmosphere. The U-tube O was empty. P was filled with pumice saturated with anhydrous $CuSO_4$, and Q with dried $CaCl_2$. When the connections were all proved to be tight, the tube N was fitted into the neck of the bulb-tube with a piece of rubber tubing, and the acid in the bulb was allowed to run into the flask very slowly, and when it was all in, a slow current of air was forced through the apparatus by means of the bottles L L. The air was freed from $CO_2$ by potassic hydrate in the tube M. As soon as the current of air was started, the flask A was heated gradually, and finally the solution was boiled until the bend of the tube O was filled with condensed water. It was then allowed to cool while the current of air was continued. The potash bulb and the drying tube were detached and weighed with the usual precautions; the increase of weight, of course, was the $CO_2$ due to the carbonates contained in the ore.

### WATER AND CARBON IN CARBONACEOUS MATTER.

Many ores besides blackbands contain carbon; for instance, several ores from New Jersey contain graphite, and nearly all limonites and magnetites contain carbon in organic matter, probably from the organic acids which originally held the iron in solution. As pyrites was also of common occurrence in such ores, it was necessary to devise some method by which the water of composition and the carbon could be determined in the presence of pyrites. In attempting to determine the water by heating the ore in a current of air, some $H_2SO_4$ was always formed and driven over into the drying tube, and some organic matter was certain to be dissolved if the ore was treated with acid for the determination of the carbon. It was found by careful experiments that when a carbonate of any kind was fused with potassic anhydrodichromate in excess, the $CO_2$ was all expelled together with any water present, while pyrites treated in the same way was oxidized with formation of potassic sulphate, which was not decomposed even at a bright red heat.

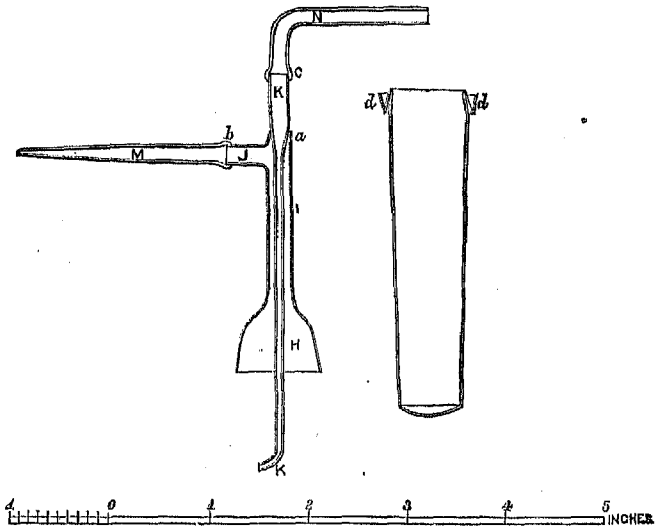


FIG. 233.

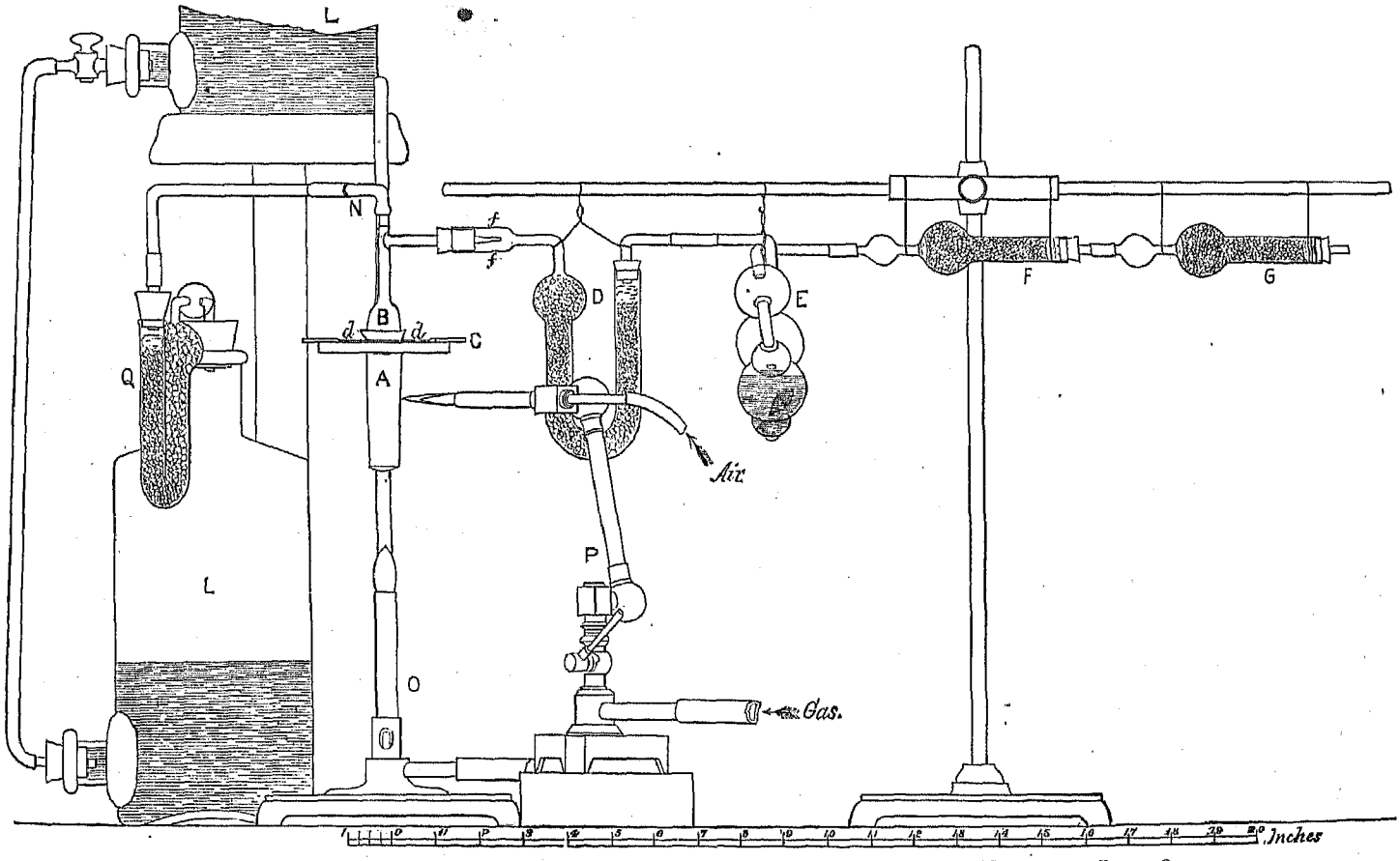


FIG. 234.—APPARATUS FOR DETERMINATION OF WATER AND CARBONACEOUS MATTER IN IRON ORES.

A very practical and easy way to apply this in the treatment of ores was afforded by the use of Dr. Gooch's tubulated crucible (*a*, Fig. 233), and the process was as follows:

For ores containing much water or carbonic acid, 1 gram, and for others 3 grams, were weighed into the crucible, A of Fig. 234, and carefully mixed, by means of a rod or wire, with 7 grams of $K_2CrO_4CrO_3$, which had been previously fused and powdered, the cap B was adjusted, and the whole was placed in the air-bath and heated to 100° for a short time. The crucible was then placed on the platinum triangle C and connected by means of a cork with the weighed tube D containing dried $CaCl_2$, and the weighed potash bulb E and drying-tube F were attached, the latter guarded by the $CaCl_2$ tube G, as can be seen in the sketch.

The cap for the crucible consists of a conical cover, H, drawn out vertically into a tube, I, into which is burned a horizontal tube, J, of the same diameter. Through the top of the tube I passes the tube K to a distance of ½ inch below the bottom of the cap, the end being slightly bent; K is burned into I at its point of entry, *a*, sealing I at this point. A straight glass tube, M, drawn tapering, is fused to the platinum tube J at *b*, and another piece, N, is bent at a right angle to the platinum tube K at *c*. A piece of rubber tubing closed with a piece of glass rod at one end was drawn over the end of the tube N, the space around the cap in the flange *d* was filled with small pieces of neutral anhydrous sodic tungstate, which were fused by means of a blow-pipe flame, making an air-tight joint. The mixture in the crucible was kept cool during this operation by dipping the end in a beaker of cold water. The expansion of the air in the apparatus during the heating caused it to bubble through the potash bulb, and the reflux of the solution in the bulb as the apparatus cooled was a good index of the tightness of the joints. When the joints were shown to be all tight the cap was removed from N and the bottle L was connected with N, as shown in the sketch. A slow current of air, freed from $CO_2$ and water by passing through the tube Q, containing KHO and $CaCl_2$, was then started through the apparatus, and the crucible was heated very gradually and cautiously by the burner O. As the steam was gradually driven into the drying-tube it was not allowed to condense at *f*, but was driven forward into the $CaCl_2$ by the heat of a small alcohol lamp applied to the drying-tube at this point. When the greater part of the water had been thus driven over, the crucible was heated by a horizontal flame from the blast-lamp P above the level of the mixture, to prevent the latter from frothing up and stopping the end of the tube K. The bottom of the crucible was gradually heated to a dull red and allowed to remain at this temperature for about 15 minutes, when the lamps were turned out and the whole was allowed to cool in the current of dried air from the bottle L. The tubes were then reweighed; the increase in the weight of D was the weight of the water of composition in the ore, and that of the potash bulb and drying-tube the weight of the total $CO_2$. This latter, of course, was the sum of the $CO_2$ due to the carbon of the carbonaceous matter or graphite, and of that due to the $CO_2$ in the carbonates. The amount of the latter (previously determined) was subtracted from the total $CO_2$, and the difference, multiplied by 0.2626, gave the carbon in carbonaceous matter, or the graphite.

### ALKALIES.

The alkalies were generally confined to the insoluble siliceous matter in the ores, but were occasionally found in the portion soluble in HCl. In the former case 5 or 10 grams of the ore were digested in HCl until only the silicates remained undissolved, diluted, and filtered. The insoluble residue was washed, dried, ignited, and treated in the crucible with HFl and $H_2SO_4$ until it was entirely decomposed; it was then evaporated down until all the HFl and nearly all the $H_2SO_4$ volatilized. It was then treated with hot water and a little HCl, if necessary; the clear solution was transferred to a small platinum dish, the $Al_2O_3$ and $Fe_2O_3$ were precipitated by $NH_4HO$, and the solution was boiled until nearly all $NH_3$ was driven off. It was then filtered into another platinum dish, evaporated to dryness, and heated until all the ammonium salts were volatilized. The residue was treated with a little water, a few drops of ammonic oxalate and excess of $NH_4HO$, and the solution was boiled and filtered. The filtrate was evaporated to dryness and the residue was heated to dull redness. It was then treated with water, filtered, and an excess of baric hydrate (*b*) was added to precipitate the sulphuric acid and magnesia. The solution was boiled and filtered from the $BaSO_4$, and the filtrate was evaporated to dryness, after the addition of a little ammonic carbonate and hydrate. The residue was treated with a little water, filtered to get rid of the $BaCO_3$, and the filtrate was evaporated to dryness and heated carefully to volatilize any ammonium salts. The residue was treated with water, filtered into a small weighed platinum dish; the filtrate was acidulated with HCl, evaporated to dryness, heated carefully to a very low red, and weighed as quickly as possible as alkaline chlorides. (*c*) The alkaline chlorides were then dissolved in water, any residue was filtered off, weighed, and its weight subtracted from the weight of the chlorides, an excess of platinic chloride was added, and the solution was evaporated on the water-bath until the sirupy liquid solidified on cooling. The residue was treated with alcohol 95 per cent., filtered on the felt, washed with 95 per cent. alcohol, dried at 120° C., and weighed as $K_2PtCl_6$, which, multiplied by 0.1931, gave $K_2O$. The weight of the $K_2PtCl_6$, multiplied by 0.3056, to reduce to KCl, was subtracted from the weight of the alkaline chlorides, and the difference (NaCl), multiplied by 0.5299, gave $Na_2O$.

---

*a* Am. Chem. Jour., vol. ii, p 247. Chem. News, vol. xlii, p. 326.

*b* Made by treating ordinary $BaCo_3$ with tolerably strong $HNO_3$, and washing the baric nitrate with $HNO_3$. The baric nitrate was dried and fused until all the $HNO_3$ was driven off.

*c* Mixed with a little $MgCl_2$.

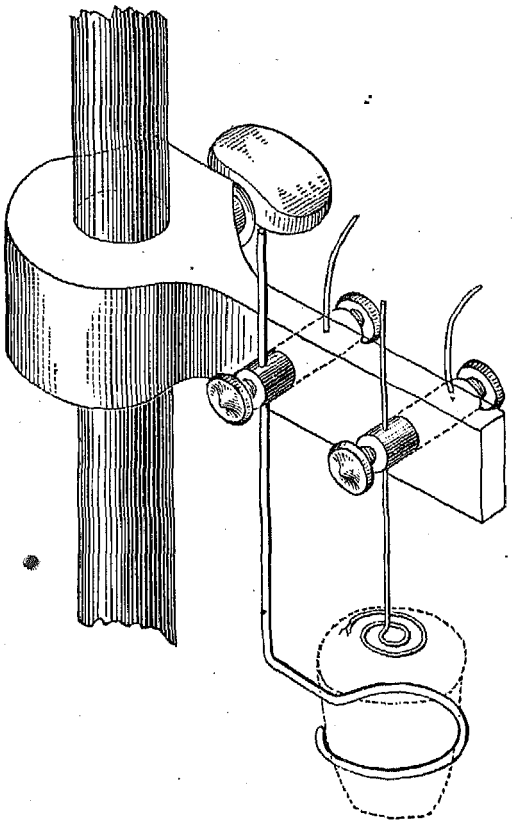

FIG. 235.—APPARATUS FOR COPPER DETERMINATION.

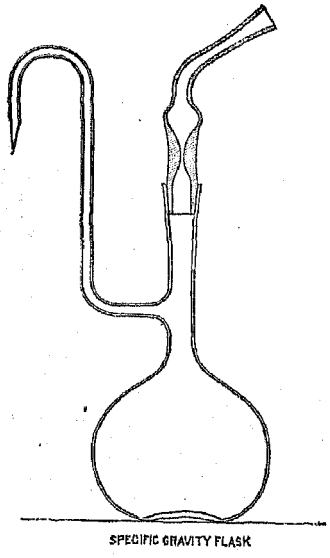


FIG. 236.

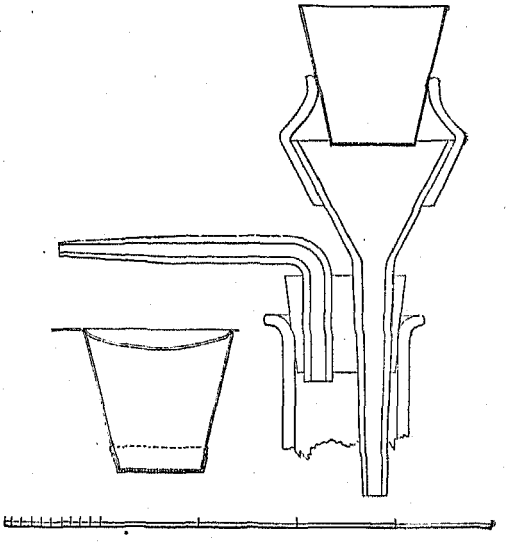

FIG. 237.—PERFORATED CRUCIBLE.

The filtrate from the $K_2PtCl_6$ was evaporated to dryness in a platinum dish, with the addition of a little oxalic acid to decompose all the platinic chloride, the residue was treated with water, filtered, and any MgO was precipitated by microcosmic salt and weighed as $Mg_2P_2O_7$, which, multiplied by 0.428, gave the amount of MgCl to be subtracted from the weight of chlorides to get the amount of alkaline chlorides.

For the estimation of alkalies in the portion of the ore soluble in HCl, 1 gram was treated with HCl, diluted, filtered into a platinum dish heated to boiling; a slight excess of $NH_4HO$ was added, and the whole was evaporated to dryness in the air-bath to render the $Fe_2O_3$ very granular and easy to wash. It was then treated with water, a drop or two of $NH_4HO$ was added, and the $Fe_2O_3$, etc., filtered off and washed. The filtrate, after the addition of a drop or two of $H_2SO_4$, was evaporated to dryness, and the ammoniacal salts were driven off by ignition. The residue was treated with water, a little ammonic oxalate was added to precipitate the lime, and the alkalies were determined, as in the former case, after the precipitation of the calcic oxalate.

### COPPER, LEAD, ARSENIC, AND ANTIMONY.

Ten grams of the very finely-ground ore were treated with HCl, with the addition $KClO_3$, until only the siliceous residue remained unacted upon. It was then diluted, filtered, reduced with ammonic sulphite, all the excess of $SO_2$ was boiled off, and $H_2S$ was passed through to saturation. The precipitate was allowed to settle in a warm place, and when the smell of $H_2S$ had nearly passed off it was filtered on the pump, washed, and treated on the filter with KHS, to dissolve out the sulphides of arsenic and antimony. The filter containing the sulphides of copper and lead was dried and ignited in a porcelain crucible. The ignited sulphides were transferred to a small beaker and treated with HCl and $HNO_3$, excess of $H_2SO_4$ added, and the whole was evaporated down until $SO_3$ began to volatilize. Water was then added, and, if any $PbSO_4$ separated out, an equal bulk of alcohol, and the whole was allowed to stand some hours, when the $PbSO_4$ was filtered off, dissolved in basic ammonic tartrate or acetate, and the PbS, precipitated by $H_2S$, was filtered, washed, and ignited. It was treated in the crucible (porcelain) with $HNO_3$ and $H_2SO_4$, and finally ignited and weighed as $PbSO_4$, which, multiplied by 0.6832, gave Pb. The solution containing the copper was evaporated down to drive off the alcohol, washed out into a platinum crucible, and the copper was precipitated on the crucible by the battery in the apparatus shown in Fig. 235, washed with water and alcohol, and weighed as Cu.

The KHS solution, containing the sulphides of arsenic and antimony, was acidulated with HCl and allowed to stand in a warm place until the sulphides and free sulphur had collected and the solution smelled but faintly of $H_2S$. It was then filtered on the felt, and the precipitate, if it contained much free sulphur, was treated with carbon disulphide, transferred with the felt to a small beaker and treated with HCL and $KClO_3$, or aqua regia, which dissolved the arsenic and antimony very readily.

A little tartaric acid was added to keep the Sb in solution, the whole was diluted and filtered, excess of $NH_4HO$ was added, and then magnesium mixture, and the arsenic precipitated as ammonic-magnesic arsenate, with the same precautions that were used in the precipitation of $P_2O_5$. The precipitate was filtered on the felt, washed with dilute $NH_4HO$, dried at 110° C., and weighed as $Mg_2(NH_4)_2As_2O_6H_2O$.

It was then heated, very gradually at first, and finally to a full red, and weighed as $Mg_2As_2O_7$. The first weight obtained, multiplied by 0.3947, and the second by 0.4839, gave As. If the heat was applied carefully and slowly enough at first the latter result was most apt to be the correct one. The filtrate which contained the antimony was acidulated with HCl and the Sb was precipitated by $H_2S$ with the usual precautions, filtered on a small disk of paper on the bottom of the perforated crucible, dried, and the precipitate and paper were treated in a porcelain crucible with fuming nitric acid, evaporated to dryness, ignited, and weighed as $Sb_2O_4$, which, multiplied by 0.7922, gave Sb.

### TITANIC ACID.

As titanic acid was found to interfere with the determination of phosphoric acid, so the latter was found in many cases to absolutely prevent the precipitation of the former. When the ore contained only a small amount of $TiO_2$, 5 grams were treated with HCl, evaporated to dryness, redissolved in dilute HCl, filtered, the insoluble residue dried, ignited, and treated in the crucible with HFl and $H_2SO_4$. The solution in the crucible was evaporated down until all the HFl and $H_2SO_4$ were driven off, ignited, and the residue was fused with $Na_2CO_3$. The fused mass was treated with hot water, which dissolved the sodic phosphate, aluminate, and excess of sodic carbonate, (*a*) leaving insoluble the sodic titanate and any ferric oxide, calcic carbonate, baric carbonate, etc. The insoluble portion was filtered off, washed, dried, and put aside to be added to the $TiO_2$ in the soluble portion. The filtrate obtained after the first treatment of the ore with HCl, which contained the great mass of the iron, with the $TiO_2$, which, dissolved with it, was deoxodized by ammonic sulphite, the excess of $SO_2$ driven off, and the ferric phosphate, titanate, and small excess of ferric oxide were precipitated by ammonic acetate exactly as in the estimation of the $P_2O_5$. This precipitate was filtered off, washed, dried, and fused with $Na_2CO_3$, the fused mass

*a* Any tungsten in the ore would be in this solution as sodic tungstate.

was treated with water, filtered, and the insoluble portion, containing $Fe_2O_3$ and sodic titanate, was washed and dried. The two filters containing the sodic titanate were separated as carefully as possible from the adhering precipitates, ignited in a platinum crucible, the precipitates were added, and the whole was fused at a low heat with 15–20 times the weight of acid potassic sulphate. The heat was gradually increased to a dull red and kept at this point until the fusion was perfectly clear and of a reddish-brown color. It was then cooled and treated with a large excess of cold water containing a few drops of $H_2SO_4$, with constant stirring until nothing remained undissolved except, perhaps, a little $SiO_2$. It was then filtered, washed with cold water, the filtrate was diluted to about 500 c.c., and boiled in a large platinum dish or beaker, with the constant addition of strong aqueous solution of sulphurous acid until all the $TiO_2$ was precipitated. The precipitate was allowed to settle, the clear solution was decanted through a filter, the precipitate was boiled up with water, thrown on the filter, and washed with boiling water, dried, ignited cautiously, and weighed as $TiO_2$. The filtrate was boiled again with the addition of sulphurous acid, and any further precipitate filtered off and added to the first. It was found that when the solution was kept at the boiling point during the filtration, and the precipitate washed with boiling water, there was no tendency to pass the filter; whereas if the solution was allowed to get cold, the filtrate was nearly always cloudy. To prevent the precipitation of ferric oxide with the $TiO_2$, it was necessary to keep an excess of $SO_2$ in the solution; but, if in spite of this precaution the ignited $TiO_2$ was colored with $Fe_2O_3$, it was fused again with $KHSO_4$ and reprecipitated. In the analysis of ores containing much $TiO_2$ it was preferable to fuse the ore at once with $Na_2CO_3$, treat with water, filter, wash and dry the residue, separate and burn the filter, fuse the residue and filter-ash with $KHSO_4$ and determine the $TiO_2$ as before.

### DETERMINATION OF SPECIFIC GRAVITY.

A great many experiments were made both on lumps and on powdered ore, and it was decided that in commercial samples good results could be obtained only by using the powdered material. The work was done, and the flask herein described was made by Mr. James Hogarth. About 20 grams of the powdered sample were weighed out and transferred to the specific-gravity flask, the construction of which is shown in Fig. 236. This flask was made with the view of overcoming two difficulties which occur in using the common flask, viz, the expansion and overflow consequent on transferring the flask at 60° F. to the higher temperature of the balance-case, and the necessity for waiting until the finely-divided mineral had settled before the stopper could be inserted without loss of material. These ends were successfully met by melting on a capillary tubulus to the lower part of the neck and grinding in a stopper having a small bulb above the capillary, to allow for expansion.

Having transferred the weighed quantity of ore to the flask, enough water was added to cover it, and the temperature was raised almost to the boiling point by placing the flask in a water-bath. To insure complete expulsion of air the flask was now placed under a bell jar connected with the aspirator and allowed to boil for a few moments at the reduced pressure. It was then filled up with water almost to the tubulus, cooled, the stopper was inserted, and by suction it was filled up slightly above the mark on the capillary part of the stopper. When the thermometer was stationary at 60° F. the volume was adjusted by touching the capillary end of the tubulus with blotting-paper, or by bringing a drop of water to it, as the case might require. The flask was then dried, transferred to the balance-case, and, after a sufficient time had elapsed to allow it to take the temperature of the room, weighed.

If W be the weight of ore taken, W′ the weight of ore + water at 60°, and K the weight of the flask + water at 60°, then

$$\text{Sp. gr.} = \frac{W}{W + K - W'}.$$

To obtain K the flask was nearly filled with boiled water and treated exactly as described above.

### THE PERFORATED CRUCIBLE.

In processes in which the use of filter-paper is deleterious or inconvenient, filtrations and ignitions have been made with the aid of the asbestos filter devised by Mr. Gooch, which consists essentially of a felt of asbestos deposited upon a perforated surface of platinum. (*a*)

The mode of preparing the filter is as follows: Asbetos of fine, silky, flexible fiber is scraped longitudinally (not cut) to a fine, short down, which is purified by boiling in strong hydrochloric acid and washing by decantation. A platinum crucible, with bottom perforated with numerous fine holes, is fitted to the upturning end of a piece of soft-rubber tubing, the other end of which is stretched over the top of a funnel, as shown in Fig. 237, and the neck of the latter passes through the stopper of a vacuum flask in the usual way.

*a* For a full description of the process, I refer to Mr. Gooch's original publication in Proceedings of the Amer. Acad. of Science (1878), or Chem. News, xxxvii, 181.

The vacuum pump having been put in action, a little of the prepared asbestos, suspended in water, is poured into the crucible and the pump is attached, when the asbetos at once assumes the condition of a firm, compact layer, which is washed with ease under the pressure of the pump.

After washing the felt, the crucible with the felt adhering is removed from the funnel, ignited, cooled, and weighed as usual; then set again in place in the rubber holder, taking care that the pump is working, and the liquid to be filtered is poured into the crucible. The crucible, felt, and adhering precipitates are, after washing, ingited, or merely dried, as the case demands, with no further care than the nature of the precipitate itself necessitates.

During the ignition of precipitates, it is frequently necessary to prevent the contact of reducing gases with the perforated bottom; and this is accomplished by placing the crucible either upon a platinum crucible cover or within a second crucible, or better, by using a form of crucible which is conical in shape and provided with a cap, removable at pleasure, to cover the bottom during ignitions. (*a*) When a larger filtering surface than the bottom of a crucible affords is needed, a cone of platinum, perforated and fitted to a rubber seat, is substituted for the crucible.

## SKETCH OF THE VARIOUS METHODS PROPOSED FOR THE DETERMINATION OF PHOSPHORIC ACID, AND DISCUSSION OF THE METHODS IN GENERAL USE AT THE PRESENT TIME.

I shall not attempt in this sketch to trace those methods which are not applicable to iron ores, among which may be mentioned the lead, (*b*) mercury, (*b*) uranium, (*c*) and tin (*d*) methods, and that based on the separation and weighing of ferric phosphate and the titration of the iron by solution of permanganate. (*e*)

The first step toward an accurate method for the estimation of phosphoric acid in presence of iron was taken when Otto, (*f*) in 1844, suggested its precipitation as $Mg_2(NH_4)_2P_2O_8$ by adding magnesic sulphate to an ammoniacal liquid in which the $Fe_2O_3$ was kept in solution by tartaric acid.

The separation of this acid from a large excess of ferric oxide was still very difficult, and the results obtained were very inaccurate.

In 1846 Svanberg & Struve (*g*) discovered the reaction of phosphoric acid with ammonic molybdate, and Rose (*h*) confirmed their statements. This, however, was only qualitative.

R. Weber, (*i*) in 1846, showed the necessity for converting any pyrophosphoric into orthophosphoric acid, and recommended heating with $H_2SO_4$ to accomplish this result.

About this time Fresenius (*j*) published the method which is largely the same as that which is now known as the acetate method. It is in substance as follows: Reduce the iron in the acid solution with $Na_2SO_3$ until $Na_2CO_3$ produces a white precipitate; boil off all $SO_2$, neutralize nearly with $Na_2CO_3$, add a few drops of chlorine water and excess of sodic acetate; add chlorine water until the liquid is red, boil until it clears, and filter hot. The precipitate contains all the $P_2O_5$. Dissolve this precipitate in HCl and precipitate the iron by $NH_4HO$ and $(NH_4)_2S$, or precipitate, after reducing with $Na_2SO_3$, by NaHO, boiling hot, filter, and in the filtrate precipitate with magnesium mixture and ammonia.

He stated that neither citric acid nor sugar possessed any advantage over tartaric acid in preventing the precipitation of small amounts of iron with the $Mg_2(NH_4)_2P_2O_8$.

J. C. Nesbitt (*k*) claimed that the precipitate of $Mg_2(NH_4)_2P_2O_8$, from a solution containing $MgSO_4$, $NH_4Cl$, $NH_4HO$, $Fe_2O_3$, and $Al_2O_3$, contained varying amounts of $Fe_2O_3$ and $Al_2O_3$ unless the solution was very dilute and contained a great excess of tartaric acid and ammonia; and Fresenius (*l*) stated that at a certain degree of concentration a precipitate was thrown down from a solution containing only $Mg_2SO_4$, $NH_4Cl$, tartaric acid, and ammonia.

Rose, a little later, published an account of the various methods for the determination of $P_2O_5$, and said, among other things, in regard to the precipitate of $Mg_2(NH_4)_2P_2O_8$, that the solution, after the addition of $MgSO_4$, $NH_4Cl$, and $NH_4HO$, should stand for some hours, and should not be heated above 30°.

The precipitate should be washed (according to Fresenius) with ammonia water, and the presence of a great excess of ammoniacal and other salts, Rose stated, had no influence upon the precipitation. He added that $(NH_4)_2CO_3$ threw down an insoluble double salt of Mg and $NH_4$, and should not be used instead of $NH_4HO$, and also that $P_2O_5$ could not be perfectly separated from iron by $(NH_4)_2S$, for while the FeS contained no $P_2O_5$, the filtrate deposited iron with the $Mg_2(NH_4)_2P_2O_8$. He also suggested the precipitation of $P_2O_5$ by $BaCO_3$.

Sonnenschein (*m*) first used, about 1850, the molybdate method quantitatively. He used a solution containing 1 part ammonic molybdate and 20 parts $HNO_3$. Of this solution he used 30 times as much as was necessary to precipitate the $P_2O_5$, allowed it to stand several hours at a gentle heat, filtered, washed with the precipitant dissolved on the filter in $NH_4HO$, and then precipitated by Mg mixture.

Ullgren, (*n*) about the same time, proposed the following method: A solution of the iron ore in HCl, or of the

*a* This convenient little crucible is made and perforated in the best possible manner by J. Bishop, of Sugartown, Pa.

*b* Pogg. Ann., lxxvi, 218.
*c* Leconte, Compt. Rend., xxix, 55.
*d* Compt. Rend., xxxiii, 385.
*e* Raewsky, Compt. Rend., xxiv, 681.
*f* Ann. d. Pharm., viii, 142, 167.
*g* Jour. für Pr. Chem., xliv, 291.
*h* Pogg. Ann., lxxvi, 26.
*i* Pogg. Ann., lxxiii, 137.
*j* Jour. für Pr. Chem., xlv, 258.
*k* Jour. Chem. Soc., i, 44.
*l* Jour. Pr. Chem., xlv, 259.
*m* Jour. Pr. Chem., liii, 339.
*n* Jour. Pr. Chem., liii, 33.

iron in $HNO_3$, evaporated to a sirupy consistency with HCl and diluted, was poured into a solution of potassic sulphide and potassic silicate (1 gram of iron to 5 grams potassic sulphide and 1 gram potassic silicate). The precipitate contained MgO, CaO, $Al_2O_3$, and sulphides of positive metals; the filtrate, potassic phosphate, and sulphides of negative metals. The filtrate was mixed with freshly precipitated $PbCO_3$, filtered and washed with water containing one-tenth its volume of a concentrated solution of $(NH_4)_2CO_3$ and $NH_4HO$. The filtrate was evaporated to dryness, the mass moistened with HCl, diluted, and filtered from $SiO_2$. Filtrate contained $P_2O_5$ and traces of $Fe_2O_3$, etc. Tartaric acid was added, and $P_2O_5$ precipitated by Mg mixture as usual. He also suggested adding ferrocyanide of potassium and $K_2S$ to the nitric-acid solution of the iron containing tartaric acid, ammonia, and magnesic sulphate, filtering off the precipitate of S and $Mg_2(NH_4)_2P_2O_8$, and fusing with $Na_2CO_3$, and determining $P_2O_5$ in the filtered solution, after acidulating with HCl, by Mg mixture.

Kremers (*a*) gave the proper strength of ammonia water for washing the precipitate of $Mg_2(NH_4)_2P_2O_8$ as 3 parts water to 1 part $NH_4HO$. He said that the precipitate dissolved in all other mixtures.

W. Wicke (*b*) recommended molybdate of lead instead of molybdate of ammonia as a precipitant of $P_2O_5$.

W. Knop (*c*) stated that pure silicate of potash treated with $HNO_3$ and ammonic molybdate gave a precipitate similar to that obtained from a small amount of $P_2O_5$.

Damour and H. Sainte-Claire Deville, (*d*) in 1858, showed that oxide of cerium added to an acid solution of $P_2O_5$ gave a pale yellow precipitate.

Staedeler (*e*) recommended Otto's method, but suggested redissolving and reprecipitating the first precipitate of $Mg_2(NH_4)_2P_2O_8$.

A. Lipowitz (*f*) suggested the use of a molybdate solution containing 2 $MoO_3$, 1 tartaric acid, 15 water, 10 $NH_4HO$, and 15 $HNO_3$. After adding the precipitant to the solution of iron containing $P_2O_5$, he heated it to boiling, and weighed the precipitated phospho-molybdate of ammonia on a counterpoised filter, dried at 20° or 30°, or better, over $H_2SO_4$. The precipitate contained 3.607 per cent. $P_2O_5$.

H. Struve (*g*) dissolved the iron in $HNO_3$ and HCl, evaporated to dryness, redissolved in HCl, and filtered from $SiO_2$, precipitated by $NH_4HO$, fused precipitate with $Na_2CO_3$, dissolved in hot water, filtered, and determined $P_2O_5$ in filtrate by Mg mixture.

V. Eggertz, (*h*) in 1860, recommended the molybdate method. He dissolved $MoO_3$ in 4 parts $NH_4HO$, and filtered into 15 parts $HNO_3$ (1.2 sp. gr.).; dissolved the iron or steel in $HNO_3$, evaporated to dryness, redissolved in HCl, added molybdate solution, and set it aside at a temperature of 40°, with occasional stirring for 2 or 3 hours. He filtered the dried precipitate at 95°, and weighed. The precipitate contained 3.74 per cent. $P_2O_5$.

C. Chancel (*i*) treated the iron ore with $HNO_3$, precipitated any $H_2SO_4$ with $BaCl_2$, and HCl with $AgNO_3$; precipitated the Ag and reduced the iron with $H_2S$, boiled off in current of $CO_2$, and precipitated $P_2O_5$ with nitrate of bismuth. The precipitate contained 31.28 per cent. $P_2O_5$.

R. Warrington, jr., (*j*) recommended the use of citric acid instead of tartaric acid, to avoid precipitation of Mg salts with the $Mg_2(NH_4)_2P_2O_8$.

Fr. Mohr (*k*) showed that the precipitate in a solution of iron by sodic phosphate had the formula $Fe_2O_3P_2O_5$. On long washing the precipitate was decomposed $P_2O_5$ and $Fe_2O_3$, dissolving with an acid reactive.

Schloessing (*l*) ignited the phosphate in a mixture of $SiO_2$, then transferred to a carbon boat, and heated in a porcelain tube in a current of CO. The loss of weight was $P_2O_5$. If the porcelain tube is connected with a silver tube heated to redness and containing Cu, the Cu takes up all the P from its volatile compound; or if the gas from the porcelain tube is led into a bulb apparatus containing $AgNO_3$ and warmed in a water-bath to 80° or 90° C., the silver phosphide collected here and the red phosphorus remaining in the tube may be oxidized with $HNO_3$, evaporated to dryness, heated to incipient fusion, extracted with water, and the residue weighed as 3 $Ag_2OP_2O_5$.

R. Warrington, jr., (*m*) recommended neutralizing the nitric-acid solution after separation of $SiO_2$ with $NH_4HO$, and precipitating with acetate of lead (or with $Pb(NO_3)_2$ and PbO). The lead phosphate, after washing with warm water containing some ammonic acetate, was dissolved in dilute $HNO_3$ and decomposed with $H_2S$. From the filtrate, which contained all the $P_2O_5$ with very little iron, the $P_2O_5$ was precipitated after the addition of a little citric acid by Mg mixture.

R. Fresenius (*n*) remarked, in regard to the molybdate method: 1. $HNO_3$, even in large excess, did not influence the exactness of the method. 2. HCl in large amount prevented, partially or entirely, the precipitation of the phospho-molybdate; 3.3 per cent. of HCl gave results that were approximate, but still too low. 3. In the presence of much $HNO_3$, HCl was still more disadvantageous. 4. $H_2SO_4$, $Fe_2Cl_6$, $Al_2Cl_6$, even in large amount, did not influence the result. 5. With much $NH_4Cl$ the results were too low, as they were also when the solution was very dilute.

F. Knapp (*o*) and R. Pribram (*p*) claimed that in a solution containing much $Al_2O_3$ the precipitation of the $Mg_2(NH_4)_2P_2O_8$ in the presence of tartaric acid and ammonia was entirely prevented.

---

*a* Pogg. Ann., lxxxiv, 77.
*b* Ann. Ch. Phar., xcv, 373.
*c* Chem. Centr., 1857, 691 and 861.
*d* Inst., 1858, 69.
*e* Ann. Ch. Pharm., cix, 306.
*f* Pogg. Ann., cix, 135.
*g* Jour. Pr. Chem., lxxix, 321.
*h* Jour. Pr. Chem., lxxix, 496.
*i* Compt. Rend., li, 882.
*j* Jour. Chem. Soc., xvi, 304.
*k* Zeit. Anal. Chem., ii, 250.
*l* Compt. Rend., lix, 384.
*m* Chem. News, xi.
*n* Zeit. Anal. Chem., iii, 446.
*o* Zeit. Anal. Chem., 1865, 473.
*p* Vierteljahrschr. Pr. Pharm., xv, 184.

J. Spiller (*a*) treated the HCl solution with ammonic bisulphite, drove off the excess of $SO_2$ by heating, cooled the solution to 20° C., and added a solution of ammonic carbonate until the precipitate, at first red, became greenish in color. This precipitate, which contained all the $P_2O_5$, was filtered off and dissolved in HCl, the iron separated according to Fresenius' method by $(NH_4)_2S$ and $NH_4HO$, and the $P_2O_5$ precipitated in the filtrate by Mg mixture.

Brassier (*b*) suggested the use of $MgCl_2$ instead of $MgSO_4$.

E. G. Tosh (*c*) recommended Spiller's method, but instead of separating the $Fe_2O_3$ and $P_2O_5$ by $(NH_4)_2S$ and $NH_4HO$, added citric acid to the HCl acid solution of the precipitate by ammonic carbonate, and precipitated the $P_2O_5$ by Mg mixture and ammonia, as $Mg_2(NH_4)_2P_2O_8$.

Tantin (*d*) proposed treating iron or steel with HCl in a flask, and passing the gases evolved through a solution of KHO to separate S, and then through a solution of nitrate of silver in which the phosphuretted hydrogen precipitates silver as phosphide. This phosphide of silver he filtered off and treated with aqua regia, which oxidized the P to $P_2O_5$ and rendered the Ag insoluble as chloride. The AgCl he filtered off, and determined the $P_2O_5$ in the filtrate.

W. Kübel (*e*) showed that $Mg_2(NH_4)_2P_2O_8$ was much less soluble in ammonia water than Fresenius supposed. As he found basic magnesic sulphate in this precipitate, he recommended re-solution and reprecipitation.

E. Kessel (*f*) stated that the amount of basic magnesic sulphate precipitated with the $Mg_2(NH_4)_2P_2O_8$ was very small if no great excess of $MgSO_4$ was used and sufficient $NH_4Cl$. He also claimed that the presence of soluble Mg salts decreased the solubility of the $Mg_2(NH_4)_2P_2O_8$, and that dilute ammonia dissolved it, the solvent action of this latter being increased by the presence of $NH_4Cl$.

Th. Petersen (*g*) restated the necessity for completely removing $SiO_2$ before precipitating $P_2O_5$ by molybdate solution.

F. Kessler (*h*) proposed to determine P in iron and steel by precipitating the Fe from solution by $K_4FeCy_6$, and in the filtrate determining $P_2O_5$ as $Mg(NH_4)_2P_2O_8$.

Meinicker (*i*) suggested dissolving iron or steel in double chloride of copper and ammonium, filtering, and treating the residue with $HNO_3$, and precipitating $P_2O_5$ in this solution with molybdate solution.

E. Richters (*j*) recommended washing the precipitate of ammonic phospho-molybdate with solution of ammonic nitrate.

E. W. Parnell (*k*) showed the insolubility of $Mg_2(NH_4)_2P_2O_8$ in ammoniacal liquids containing excess of Mg salt or sodic phosphate.

J. Parry (*l*) dissolved iron or steel in aqua regia, and after separating $SiO_2$ transferred the HCl solution to a flask and added sufficient ammonia to precipitate all the $Fe_2O_3$, then just enough $HNO_3$ to dissolve the precipitate. He heated the solution nearly to boiling, and added an excess of an aqueous solution of ammonic molybdate. If there was no precipitate he added $HNO_3$, drop by drop, shaking the flask constantly until a distinct precipitate appeared, after which he added a small additional amount of $HNO_3$, shook the flask well, and allowed the precipitate to settle for a few minutes. He filtered, washed with water containing a little $HNO_3$, and weighed the precipitate of phospho-molybdate of ammonia, which contained 1.63 per cent. of P.

T. R. Ogilvie (*m*) made a number of experiments to show the effect of varying amounts of Mg salts, citric acid, $Al_2O_3$, $Fe_2O_3$, and ammonic oxalate on the precipitation of $P_2O_5$ as $Mg_2(NH_4)_2P_2O_8$.

E. W. Parnell (*n*) said, in answer to Ogilvie, that the purity of the precipitate of $Mg_2(NH_4)_2P_2O_8$ was not affected by the quantity of the Mg salts, but by the manner of precipitation. He recommended the use of dilute solutions, and said they should stand quiet for a long time.

W. Flight (*o*) discussed various methods and recommended—

1. To separate $P_2O_5$ from $Fe_2O_3$, he passed $H_2S$ through the weak acid solution, then added $(NH_4)_2S$ in excess, boiled, filtered, washed with $H_2S$ water, and determined $P_2O_5$ in filtrate.

2. From $Al_2O_3$ he added excess of NaHO to solution, then $BaCl_2$ to precipitate all the $P_2O_5$, allowed to stand several hours protected from $CO_2$, filtered and washed with NaHO water, decomposed precipitate and determined $P_2O_5$.

3. From $Fe_2O_3$ and $Al_2O_3$ he treated the not too acid solution with excess of $Na_2S_2O_3$, boiled, filtered $P_2O_5$ partly with $Al_2O_3$ in precipitate and partly wtih FeO in filtrate. He then separated $P_2O_5$ by methods I and II. and II.

T. E. Cairns (*p*) showed the inaccuracy of Sonnenschein's molybdate method when the solution was not heated above 40° C., unless it was allowed to stand several days. He recommended dissolving the iron or steel in HCl and $KClO_3$, evaporating to dryness to get rid of $SiO_2$, precipitating the $Fe_2O_3$ and $P_2O_5$ by $NH_4HO$, filtering, dissolving this precipitate in $HNO_3$, and evaporating down, diluting to 250 c.c., neutralizing by $NH_4HO$, adding

*a* Jour. Chem. Soc. (2), iv, 148.
*b* Ann. Chem. Phys. [4], vii, 355.
*c* Chem. News, xvi, 168.
*d* Chem. News, xviii, 252.
*e* Zeit. Anal. Chem., viii, 125.
*f* Zeit. Anal. Chem., viii, 164.
*g* Verhandl. Geolog. Reichsanst., 1869, 80.
*h* Jour. Pr. Chem. [2], 2, 364.
*i* Zeit. Anal. Chem., 1871, p. 280.
*j* Zeit. Anal. Chem., 1871, 305.
*k* Chem. News, xxiii, 145.
*l* Chem. News, xxv, 229.
*m* Chem. News, xxxi, 274; xxxii, 5, 12, 70.
*n* Chem. News, xxxii, 222.
*o* Jour. Chem. Soc., xxviii, 592.
*p* Am. Chemist., vii, 215.

"molybdate solution," heating nearly to boiling and allowing the phospho-molybdate to settle. He recommended washing this precipitate with "molybdic acid solution", dissolving in $NH_4HO$, neutralizing by HCl, and precipitating the $P_2O_5$ by Mg mixture.

O. Korschelt (*a*) suggested the use of potassic molybdate instead of ammonic molybdate. He prepared the solution by dissolving 1 part $MoO_3$ in 1 part KHO and 6 parts water, after cooling adding a solution of ½ part tartaric acid in 2 parts water, and finally 7½ parts nitric acid, boiling and filtering while hot. He dissolved the iron or steel in the smallest possible amount of boiling nitric acid, filtered, and added the heated solution to an excess of the molybdate solution in a capsule, also heated on the water-bath. He filtered on a balanced filter, washed with dilute $HNO_3$ and then with alcohol, dried at 120° to 130° C., and weighed. The precipitate contained 1 73 per cent. P.

Boussingault (*b*) used the fact of the insolubility of phosphate of cerium (pointed out by Damour and Deville) in $HNO_3$ in the determination of $P_2O_5$ in iron and steel.

Finkmer (*c*) approved of Sonnenschein's method, and suggested the addition of an increased amount of $NH_4NO_3$ and the washing of the precipitate with a solution of ammonic nitrate and nitric acid. He washed the precipitate into a weighed crucible, evaporated off the water, heated it over wire-gauze to expel the $NH_4NO_3$, and weighed the ammonic phospho-molybdate. It contained 3.794 per cent. $P_2O_5$.

E. Riley (*d*) recommended most strongly the acetate method, using $MgCl_2$ instead of $MgSO_4$ in his magnesia mixture, and citric acid to keep the $Fe_2O_3$ in solution. He considered a large amount of citric acid necessary. He allowed the solution to stand over night before stirring, then stirred vigorously, and allowed to stand for 24 hours before filtering off the precipitate of $Mg_2(NH_4)_2P_2O_8$. He suggested, also, a combination of the acetate and molybdate methods by dissolving the acetate precipitate in HCl, adding excess of $NH_4HO$, acidulating by $HNO_3$, and precipitating by ammonic molybdate, filtering and weighing the phospho-molybdate of ammonia.

For the determination of $P_2O_5$ in iron ores, iron, and steel there are practically but two methods in general use at the present day—the molybdate and the acetate—unless we consider a combination of the two as a separate method. Each has its ardent admirers, but the general opinion among chemists of experience is, that either method will give accurate results if proper care and skill are used in carrying out the details of the work. I propose to point out those details which require special care in each method, and want of attention to which may cause serious errors in the results. The presence of titanic acid, unless the precautions mentioned in the method given in my report for the determination of $P_2O_5$ are observed, will be a fruitful source of error in either, and arsenic acid, unless carefully separated, will cause too high results, whichever method be used.

1. In the molybdate method the first point to be observed is the destruction of the carbonaceous matter, especially in the case of irons and steel. I first observed this in 1877 in an investigation of Korschelt's method, which is mentioned in a paper by Hunt and Peters (*e*) to whom I communicated the fact in 1878. Finkmer (*f*) mentioned the same thing in the same year, and says, very truly, "0.10 per cent. of P in a steel may easily be entirely overlooked by inattention to this fact."

2. If the solution of the steel or iron in $HNO_3$ is evaporated to dryness, and the residue is ignited to destroy carbonaceous matter, it must be redissolved in HCl, for very often the ignited ferric phosphate is quite insoluble in $HNO_3$. This requires repeated evaporations with $HNO_3$ to get rid of HCl, which is considered deleterious by such analysts as Fresenius and Finkmer.

3. Silica must be removed from the solution before adding the molybdate solution, unless the $P_2O_5$ be finally precipitated as $Mg_2(NH_4)_2P_2O_8$.

4. After adding the molybdate solution, great care must be exercised on two points—the degree of acidity and the temperature of the solution. The phospho-molybdate of ammonia will not precipitate readily if the solution is too acid or the temperature too low, and a continued high temperature or boiling of the solution tends to the precipitation of an excess of molybdic acid with the ammonic phospho-molybdate. The most careful analysts direct that the solution should stand from 6 to 24 hours before filtering, and that the filtrate should always be tested by a fresh addition of molybdate solution.

5. If the $P_2O_5$ is finally weighed as $Mg_2P_2O_7$ it is very difficult to get rid of the last traces of molybdic acid. After two precipitations as $Mg_2(NH_4)_2P_2O_8$, I have found appreciable amounts of $MoO_3$ in the HCl solution of the ignited $Mg_2P_2O_7$.

In the acetate method the first point which requires special attention is: 1. Driving off the excess of $SO_2$. It is very necessary to do this, as ferric phosphate is soluble in $SO_2$ and in ammonic sulphite.

2. Both care and experience are necessary in neutralizing the deoxidized solution, for all the free HCl must be neutralized, and enough $NH_4HO$ added to precipitate all the ferric phosphate and ferric oxide, and an excess over this should be avoided as tending to obscure the reaction and causing an excess of ammonic acetate, which is deleterious. On the other hand, if all the $Fe_2O_3$ is not precipitated, there will be loss, for ferric phosphate is soluble in ferric chloride.

3. The precipitate of ferric phosphate and oxide should not be washed much (one washing is ample), as ferric phosphate is decomposed by pure water. My own personal preference is for the acetate method, and for the

*a* Dingler's Pol. Jour., ccxxv, 158.
*b* Dingler's Pol. Jour., 1872, p. 223.
*c* Deut. Chem. Ges. Bu., 10, pp. 1638-1641.
*d* Chem. Soc. Jour., 1878, i, 104.
*e* Metallurgical Review, vol. ii, p. 365.
*f* Deut. Chem. Ges. Bu., 10, pp. 1638-1641.

following reasons: 1. The sources of error are fewer and are more easily guarded against. 2. If the proper precautions are taken in each method, the acetate is the quicker. I have made many determinations (the accuracy of which was afterward proven by other results) in iron ores in 24 hours and in steels in 48. 3. There is not the same temptation in the acetate method that there is in the molybdate to take short cuts, which has brought many a young chemist to grief. 4. Experience has shown (*a*) that the molybdate method, as practiced by many chemists, is not as accurate although it may be shorter than the acetate.

An accurate determination of $P_2O_5$, by whatever method it is made, requires much skill and not a little practice, and the advocate of one method often makes the other suffer in comparison, more by reason of his own want of skill in the manipulation of the other method than by reason of any great advantage inherent in his own.

---

*a* E. Riley, Jour. Chem. Soc., 1878, i, 104, besides numerous cases which have come under my own observation.

# TABLE 25.—PARTIAL ANALYSES OF IRON ORES.

TABLE 25.—*Partial analyses of iron ores.*

LAKE SUPERIOR REGION.

| | Chemist. | Sampler. | Remarks. | Kind of ore. | Number. | Name and location of mine. |
|---|---|---|---|---|---|---|
| 1 | Blair | Willis | From 20,000 tons at Cleveland | Specular No. 1 | 140 | Jackson, Marquette county, Michigan. |
| 2 | do | do | Fine ore, from same pile as No. 140 | Specular | 150 | do |
| 3 | Pitman | do | From 15,000 tons at Cleveland | Specular No. 1 | 113 | Cleveland, Marquette county, Michigan. |
| 4 | Gooch | do | From 1,000 tons, selected ore, at Cleveland | Specular No. 2; green | 131 | do |
| 5 | Blair | Putnam | From southeastern part of pit No. 1 | Specular | 88 | New York, Marquette county, Michigan. |
| 6 | do | do | From 200 tons of ore from shaft near the Beardsley pit. | Specular with martite. | 89 | do |
| 7 | Pitman | Willis | From 9,000 tons at Cleveland | Specular No. 1 | 114 | do |
| 8 | Gooch | do | From 1,000 tons at Cleveland | Specular No. 2 | 115 | do |
| 9 | Pitman | do | From 1,500 tons at Cleveland | Specular No. 2 "Essex" | 142 | Lake Superior, Marquette county, Michigan. |
| 10 | do | do | Fine ore, from 20,000 tons, at Cleveland | Specular | 149 | do |
| 11 | do | do | From 20,000 tons at Cleveland | Specular No. 1 | 141 | do |
| 12 | Blair | do | From 4,000 tons at Cleveland | Specular | 139 | do |
| 13 | Gooch | do | From 2,000 tons at Cleveland | Specular | 129 | Barnum, Marquette county, Michigan. |
| 14 | Pitman | Putnam | Across west side of pump-shaft pillar | Specular | 11 | Lake Angeline, Marquette county, Michigan. |
| 15 | do | do | From west side of west pit, 135 feet from pump-shaft. | Hematite | 12 | do |
| 16 | do | do | From northeast side of west pit, near pump-shaft pillar. | Limonite | 13 | do |
| 17 | do | Willis | From 4,000 tons at North Chicago Rolling Mill | Specular | 108 | do |
| 18 | Blair | do | From 3,000 tons at "River Furnaces" of Cleveland Rolling Mill Company, Cleveland. | Specular | 144 | Saginaw, Marquette county, Michigan. |
| 19 | Gooch | Fay | Average of output | Specular | 10 | Boston, Marquette county, Michigan |
| 20 | Blair | Pumpelly | Average of output | Specular | A | Sterling, Marquette county, Michigan |
| 21 | do | do | Granular ore | do | B | do |
| 22 | do | do | Slaty ore | do | C | do |
| 23 | Pitman | Willis | From 4,000 tons at Cleveland | Magnetite | 120 | Humboldt, Marquette county, Michigan. |
| 24 | Blair | do | From 1,000 tons at Cleveland | Magnetite | 132 | Edwards, Marquette county, Michigan. |
| 25 | do | do | From 1,000 tons at Cleveland; "slate ore" | Specular | 133 | do |
| 26 | Gooch | do | From 7,000 tons at Cleveland | Magnetite No. 1 | 103 | Champion, Marquette county, Michigan. |
| 27 | Pitman | do | From 4,000 tons at Cleveland | Magnetite and specular. | 104 | do |
| 28 | Gooch | do | From 1,500 tons at Cleveland | Specular and magnetite No. 2. | 130 | do |
| 29 | do | do | Fine ore from same pile as No. 103 | Magnetite | 147 | do |
| 30 | Pitman | do | From 1,000 tons at Cleveland | Magnetite | 127 | Keystone, Marquette county, Michigan. |
| 31 | Blair | do | From 2,000 tons at "River Furnaces" of Cleveland Rolling Mill Company. | do | 143 | do |
| 32 | do | Putnam | From stope, pit No. 4, fourth level, 130 feet east of shaft. | Magnetite | 1 | Michigammee, Marquette county, Michigan. |
| 33 | do | do | From stope, pit No. 4, first level, 375 feet east of shaft. | do | 2 | do |
| 34 | do | do | From stope, pit No. 1, second level, 140 feet west of shaft. | do | 3 | do |
| 35 | do | do | From winze, 100 feet west of shaft No. 1, 35 feet below surface. | do | 4 | do |
| 36 | do | Willis | From 4,000 tons at Cleveland | do | 110 | do |
| 37 | do | do | Fine ore from same pile as No. 110 | do | 148 | do |
| 38 | Pitman | do | From 800 tons at Cleveland | Magnetite | 121 | Spurr Mountain, Baraga county, Michigan. |
| 39 | Gooch | Putnam | From pillar in pit No. 5, fourth level, 70 feet south from shaft; from foot-wall to schist "horse". | Specular | 5 | Republic, Marquette county, Michigan. |
| 40 | do | do | From same pillar, from schist "horse" to hanging-wall. | Magnetite | 7 | do |
| 41 | do | do | From stope in Morgan shaft, 135-foot level | Specular | 8 | do |
| 42 | do | do | From stope in Ely pit, 200-foot level | do | 9 | do |

TABLE 25.—*Partial analyses of iron ores.*

LAKE SUPERIOR REGION.

| NATURAL ORE. | | | DRIED ORE. | | | P. ratio. | |
|---|---|---|---|---|---|---|---|
| P. | Fe. | Miscellaneous. | P. | Fe. | Miscellaneous. | | |
| *P. cent.* | *P. cent.* | | *P. cent.* | *P. cent.* | | *P. cent.* | |
| 0.044 | 64.84 | S 0.027 p. ct.; $SiO_2$ 4.02 p. ct.; $Al_2O_3$ 1.76 p. ct.; Mn. 0.00; $TiO_2$ 0.00; insoluble, 6.00 p. ct.; specific gravity, 5.029. | 0.044 | 65.00 | S 0.027 p. ct.; $SiO_2$ 4.03 p. ct.; $Al_2O_3$ 1.76 p. ct.; Mn. 0.00; $TiO_2$ 0.00; insoluble, 6.00 p. ct. | 0.008 | 1 |
| 0.064 | 62.00 | S 0.027 p. ct.; $SiO_2$ 5.69 p. ct.; $Al_2O_3$ 2.78 p. ct.; Mn. trace; $TiO_2$ 0.00; insoluble, 8.46 p. ct. | 0.064 | 62.09 | S 0.027 p. ct.; $SiO_2$ 5.69 p. ct.; $Al_2O_3$ 2.78 p. ct.; Mn. trace; $TiO_2$ 0.00; insoluble, 8.46 p. ct. | 0.103 | 2 |
| 0.109 | 64.47 | S 0.049 p. ct.; $SiO_2$ 3.76 p. ct.; $Al_2O_3$ 2.90 p. ct.; Mn. trace; $TiO_2$ 0.00; insoluble, 5.03 p. ct.; specific gravity, 4.965. | 0.109 | 64.47 | S 0.049 p. ct.; $SiO_2$ 3.76 p. ct.; $Al_2O_3$ 2.00; Mn. trace; $TiO_2$ 0.00; insoluble, 5.03 p. ct. | 0.169 | 3 |
| 0.170 | 56.80 | S 0.60; $SiO_2$ 10.93 p. ct.; $Al_2O_3$ 4.05 p. ct.; Mn. present; $TiO_2$ 0.00; insoluble, 14.51 p. ct; specific gravity, 4.705. | 0.170 | 56.86 | S 0.00; $SiO_2$ 10.94 p. ct; $Al_2O_3$ 4.03 p. ct.; Mn. present; $TiO_2$ 0.00; insoluble 14.51 p. ct. | 0.299 | 4 |
| 0.062 | 67.34 | S. 0.060 p. ct.; specific gravity, 4.949. Complete analysis. | 0.062 | 67.41 | S 0.060 p. ct. | 0.092 | 5 |
| 0.195 | 63.81 | S. 0 030 p. ct.; specific gravity, 5.033. Complete analysis. | 0.195 | 63.81 | S 0.030 p. ct | 0.306 | 6 |
| 0.110 | 64.40 | S 0.026 p. ct.; $SiO_2$ 5.10 p. ct.; $Al_2O_3$ 2.20 p. ct.; Mn. 0.00; insoluble, 5.03 p. ct.; specific gravity, 4.292. | 0.110 | 64.40 | S 0.026 p. ct.; $SiO_2$ 5.10 p. ct; $Al_2O_3$ 2.20 p. ct.; Mn. 0.00; insoluble, 5.03 p. ct. | 0.171 | 7 |
| 0.164 | 6[illegible].34 | S 0.086 p. ct.; $SiO_2$ 5.82 p. ct.; $Al_2O_3$ 2.98 p. ct.; Mn. present; insoluble, 7.07 p. ct.; specific gravity, 4.906. | 0.164 | 61.34 | S 0.086 p. ct.; $SiO_2$ 5.82 p. ct.; $Al_2O_3$ 2.98 p. ct.; Mn. present; insoluble, 7.07 p. ct. | 0.267 | 8 |
| 0.057 | 55.92 | S 0.074 p. ct.; $SiO_2$ 14.51 p. ct.; $Al_2O_3$ 4.02 p. ct.; Mn. 0.00; $TiO_2$ 0.00; insoluble, 17.65 p. ct.; specific gravity, 4.318. | 0.057 | 55.95 | S 0.074 p. ct.; $SiO_2$ 14.52 p. ct.; $Al_2O_3$ 4.02 p. ct.; Mn. 0.00; $TiO_2$ 0.00; insoluble, 17.66 p. ct. | 0.102 | 9 |
| 0.057 | 63.38 | S 0.057 p. ct.; $SiO_2$ 4.66 p. ct.; $Al_2O_3$ 3.13 p. ct.; Mn. 0.00; $TiO_2$ 0.00; insoluble, 7.58 p. ct. | 0.057 | 63.42 | S 0.057 p. ct.; $SiO_2$ 4.66 p. ct.; $Al_2O_3$ 3.13 p. ct.; Mn. 0.00; $TiO_2$ 0.00; insoluble, 7.59 p. ct. | 0.090 | 10 |
| 0.057 | 64.38 | S 0.074 p. ct.; $SiO_2$ 4.27 p. ct.; $Al_2O_3$ 0.91 p. ct.; Mn. 0.00; $TiO_2$ 0.00; insoluble, 6.43 p. ct.; specific gravity, 4.962. | 0.057 | 64.38 | S 0.074 p. ct.; $SiO_2$ 4.27 p. ct.; $Al_2O_3$ 0 91 p. ct.; Mn. 0.00; $TiO_2$ 0.00; insoluble, 6.43 p. ct. | 0.089 | 11 |
| 0.016 | 64.77 | S 0.055 p. ct.; $SiO_2$ 3.65 p. ct.; $Al_2O_3$ 2.28 p. ct.; Mn. 0.00; $TiO_2$ 0.00; insoluble, 6.35 p. ct.; specific gravity, 4.990. | 0.016 | 64.83 | S 0.055 p. ct.; $SiO_2$ 3.65 p. ct.; $Al_2O_3$ 2.28 p. ct.; Mn. 0.00; $TiO_2$ 0.00; insoluble, 6.36 p. ct. | 0.025 | 12 |
| 0.096 | 63.45 | S 0.011 p. ct.; $SiO_2$ 5.47 p. ct.; $Al_2O_3$ 2.41 p. ct.; Mn. 0.00; $TiO_2$ absent; insoluble, 7.12; specific gravity, 4.946. | 0.096 | 63.50 | S 0.011 p. ct.; $SiO_2$ 5.47 p. ct.; $Al_2O_3$ 2.41 p. ct; Mn. 0.00; $TiO_2$ 0.00; insoluble, 7.12 p. ct. | 0.151 | 13 |
| 0.007 | 55.11 | Specific gravity, 4.814 | 0.007 | 55.11 | | 0.013 | 14 |
| 0.061 | 53.85 | Specific gravity, 3.820 | 0.061 | 53.96 | | 0.113 | 15 |
| 0.051 | 42.27 | Specific gravity, 2.774 | 0.051 | 42.33 | | 0.121 | 16 |
| 0.031 | 46.91 | S 0.039 p. ct.; $SiO_2$ 27.72 p. ct.; $Al_2O_3$ 4.15 p. ct.; Mn. 0.00; insoluble, 30.59 p. ct.; specific gravity, 4.077. | 0.031 | 46.93 | S 0.039 p. ct.; $SiO_2$ 27.72 p. ct.; $Al_2O_3$ 4.15 p. ct.; Mn. 0.00; insoluble, 30.59 p. ct.. | 0.066 | 17 |
| 0.106 | 62.53 | S 0.057 p. ct.; $SiO_2$ 5.47 p. ct.; $Al_2O_3$ 2.53 p. ct.; Mn. 0.00; $TiO_2$ trace; insoluble, 8.68 p ct.; specific gravity, 4.963 | 0.106 | 59.44 | S 0.057 p. ct.; $SiO_2$ 5.47 p. ct.; $Al_2O_3$ 2.53 p. ct.; Mn. 0.00; $TiO_2$ trace; insoluble, 8.68 p. ct. | 0.170 | 18 |
| 0.009 | 66.36 | S 0.007 p. ct. Complete analysis | 0.009 | 66.37 | S 0.007 p. ct. | 0.014 | 19 |
| 0.053 | 64.76 | | 0.053 | 64.76 | | 0.082 | 20 |
| 0.039 | 64.49 | | 0.039 | 64.50 | | 0.060 | 21 |
| 0.025 | 64.98 | | 0.025 | 64.99 | | 0.039 | 22 |
| 0.154 | 63.79 | S 0.005 p. ct.; $SiO_2$ 7.61 p. ct.; $Al_2O_3$ 2.34 p. ct.; Mn. trace; $TiO_2$ 0.00; insoluble, 8.12 p. ct.; specific gravity, 4.851. | 0.154 | 63.85 | S 0.005 p. ct.; $SiO_2$ 7.62 p. ct.; $Al_2O_3$ 2.34 p. ct.; Mn. trace; $TiO_2$ 0.00; insoluble, 8.13 p. ct. | 0.241 | 23 |
| 0.072 | 59.89 | S 0.096 p. ct.; $SiO_2$ 7.98 p. ct.; $Al_2O_3$ 5.06 p. ct.; Mn. present; $TiO_2$ present; insoluble, 11.52 p. ct.; specific gravity, 4.726. | 0.072 | 59.91 | S 0.096 p. ct.; $SiO_2$ 7.98 p. ct.; $Al_2O_3$ 5.06 p. ct.; Mn. present; $TiO_2$ present; insoluble, 11.52 p. ct. | 0.120 | 24 |
| 0.107 | 60.02 | S 0.199 p. ct.; $SiO_2$ 6.30 p. ct.; $Al_2O_3$ 4.08 p. ct.; Mn. 0.00; $TiO_2$ present; insoluble, 11.10 p. ct.; specific gravity, 4.739. | 0.107 | 60.05 | S 0.199 p. ct.; $SiO_2$ 6.30 p. ct.; $Al_2O_3$ 4.08 p. ct.; Mn. 0.00; $TiO_2$ present; insoluble, 11.10 p. ct. | 0.178 | 25 |
| 0.039 | 64.01 | S 0.099 p. ct.; $SiO_2$ 4.92 p. ct.; $Al_2O_3$ 3.15 p ct.; Mn. 0.00; $TiO_2$ 0.00; insoluble, 7.36 p. ct.; specific gravity, 4.668. | 0.039 | 64.06 | S 0.099 p. ct.; $SiO_2$ 4.92 p. ct.; $Al_2O_3$ 3.15 p. ct.; Mn. 0.00; $TiO_2$ 0.00; insoluble, 7.37 p. ct. | 0.060 | 26 |
| 0.044 | 60.70 | S 0.064 p. ct.; $SiO_2$ 6.29 p. ct.; $Al_2O_3$ 6 08 p. ct.; Mn. present; $TiO_2$ 0.70 p. ct.; insoluble, 9.84 p. ct.; specific gravity, 4.523. | 0.044 | 60.72 | S 0.064 p. ct.; $SiO_2$ 6.29 p. ct.; $Al_2O_3$ 6.08 p. ct.; Mn. present; $TiO_2$ 0.70 p. ct.; insoluble, 9.84 p. ct. | 0.073 | 27 |
| 0.035 | 59.17 | S 0.00; $SiO_2$ 8.03 p. ct.; $Al_2O_3$ 5.35 p. ct.; Mn. 0.00; $TiO_2$ 0.00; insoluble, 12.20 p. ct.; specific gravity, 4.635 p. ct. | 0.035 | 59.20 | S 0.00; $SiO_2$ 8.03 p. ct.; $Al_2O_3$ 5.35 p. ct.; Mn. 0.00; $TiO_2$ 0.00; insoluble, 12.30 p. ct. | 0.059 | 28 |
| 0.038 | 66.75 | S 0.085 p. ct.; $SiO_2$ 2.60 p. ct.; $Al_2O_3$ 1.90 p. ct.; Mn. present; $TiO_2$ 0.00; insoluble, 3.94 p. ct. | 0.038 | 66.84 | S 0.085 p. ct.; $SiO_2$ 2.60 p. ct.; $Al_2O_3$ 1.90 p. ct.; Mn. present; $TiO_2$ 0.00; insoluble, 3.94 p. ct. | 0.057 | 29 |
| 0.548 | 60.05 | S 0.102 p. ct.; $SiO_2$ 6.69 p. ct.; $Al_2O_3$ 3.59 p. ct.; Mn. 0.00; $TiO_2$ 0.012 p. ct.; insoluble, 9.91 p. ct.; specific gravity, 4.567. | 0.548 | 60.05 | S 0.102 p. ct.; $SiO_2$ 6.69 p. ct.; $Al_2O_3$ 3.59 p. ct.; Mn. 0.00; $TiO_2$ 0.012 p. ct.; insoluble, 9.91 p. ct. | 0.913 | 30 |
| 0.314 | 59.17 | S 0.055 p. ct.; specific gravity, 4.597. Complete analysis. | 0.315 | 59.34 | S 0.055 p. ct | 0.531 | 31 |
| 0.095 | 63.55 | S 0.103 p. ct. Complete analysis | 0.095 | 63.58 | S 0.103 p. ct | 0.149 | 32 |
| 0.092 | 56.35 | S 0.237 p. ct.; $SiO_2$ 15.14 p. ct.; Mn. present; $TiO_2$ 0.00 | 0.092 | 56.36 | S 0.237 p. ct.; $SiO_2$ 15.14 p. ct.; Mn. present; $TiO_2$ 0.00 | 0.163 | 33 |
| 0.042 | 59.95 | S 0.068 p. ct.; $SiO_2$ 13.75 p. ct.; Mn. present; $TiO_2$ 0.00; specific gravity, 4.659. | 0.042 | 59.96 | S 0.068 p. ct.; $SiO_2$ 13.75 p. ct.; Mn. present; $TiO_2$ 0.00 | 0.070 | 34 |
| 0.053 | 65.24 | S 0.027 p. ct.; specific gravity, 4.865. Complete analysis. | 0.053 | 65.25 | S 0.027 p. ct | 0.081 | 35 |
| 0.118 | 61.95 | S 0.109 p. ct.; $SiO_2$ 7.09 p. ct.; $Al_2O_3$ 1.98 p. ct.; Mn. present; $TiO_2$ 0.00; insoluble, 8.28 p. ct.; specific gravity, 4.568. | 0.118 | 61.96 | S 0.109 p. ct.; $SiO_2$ 7.09 p. ct.; $Al_2O_3$ 1.98 p. ct.; Mn. present; $TiO_2$ 0.00; insoluble, 8.28 p. ct. | 0.190 | 36 |
| 0.101 | 60.98 | S 0.261 p. ct.; $SiO_2$ 7.60 p. ct.; $Al_2O_3$ 2.96 p. ct.; Mn. present; $TiO_2$ 0.00; insoluble, 8.25 p. ct. | 0.101 | 61.02 | S 0.261 p. ct.; $SiO_2$ 7.61 p. ct.; $Al_2O_3$ 2.96 p. ct.; Mn. present; $TiO_2$ 0.00; insoluble, 8.26 p. ct. | 0.166 | 37 |
| 0.114 | 62.21 | S 0.016 p. ct.; $SiO_2$ 6.91 p. ct.; $Al_2O_3$ 2.88 p. ct.; Mn. trace; $TiO_2$ 0.00; insoluble, 7.39 p. ct.; specific gravity, 4.564. | 0.014 | 62.27 | S 0.016 p. ct.; $SiO_2$ 6.92 p. ct.; $Al_2O_3$ 2.88 p. ct.; Mn. trace; $TiO_2$ 0.00; insoluble, 7.40 p. ct. | 0.183 | 38 |
| 0.024 | 67.02 | S 0.037 p. ct.; specific gravity, 5.113. Complete analysis. | 0.024 | 67.02 | S 0.037 p. ct | 0.036 | 39 |
| 0.051 | 69.62 | S 0.050 p. ct.; specific gravity, 5.071. Complete analysis. | 0.051 | 69.69 | S 0.050 p. ct | 0.073 | 40 |
| 0.061 | 64.01 | Specific gravity, 4.136 | 0.061 | 64.03 | | 0.095 | 41 |
| 0.033 | 68.17 | Specific gravity, 4.639 | 0.033 | 68.19 | | 0.048 | 42 |

TABLE 25.—*Partial analyses of iron ores*—Continued.

LAKE SUPERIOR REGION—Continued.

| | Chemist. | Sampler. | Remarks. | Kind of ore. | Number. | Name and location of mine. |
|---|---|---|---|---|---|---|
| 43 | Pitman | Willis | From 25,000 tons at Cleveland | Specular | 101 | Republic, Marquette county, Michigan. |
| 44 | Gooch | do | From 600 tons at Cleveland | Magnetite | 102 | do |
| 45 | Pitman | do | Fine ore from same pile as No. 101 | Specular | 145 | do |
| 46 | Gooch | do | Fine ore from same pile as No. 102 | Magnetite | 146 | do |
| 47 | Pitman | do | From 4,000 tons at Cleveland | Hematite | 136 | Rolling Mill, Marquette county, Michigan. |
| 48 | do | do | From 1,200 tons at Cleveland | Hematite | 112 | Manganese, Marquette county, Michigan. |
| 49 | Blair | Putnam | From stope at west end of main pit near south wall. | do | 85 | McComber, Marquette county, Michigan |
| 50 | do | do | Same stope near north wall | do | 86 | do |
| 51 | do | do | From bottom of shaft about 130 feet west of engine-house, west of side of shaft. | do | 87 | do |
| 52 | Gooch | Willis | From 1,500 tons at Cleveland | do | 111 | do |
| 53 | Pitman | do | From 2,000 tons at Cleveland | Hematite | 137 | Jackson Hematite, Marquette county, Michigan. |
| 54 | do | do | From 6,000 tons at Cleveland | do | 138 | do |
| 55 | do | do | From 3,000 tons at Cleveland | Hematite | 124 | Cambria, Marquette county, Michigan. |
| 56 | Gooch | do | From 1,000 tons at Cleveland | Hematite | 116 | Bessemer, Marquette county, Michigan. |
| 57 | Pitman | do | From 5,000 tons at Cleveland | Hematite | 122 | Cleveland Hematite (Nelson), Marquette county, Michigan. |
| 58 | do | Putnam | From stope in pit No. 2, 90-foot level | Hematite | 14 | Salisbury, Marquette county, Michigan. |
| 59 | do | do | From drifts, 130-foot level | do | 15 | do |
| 60 | Blair | Willis | From 4,000 tons at North Chicago rolling-mill | do | 109 | do |
| 61 | Gooch | do | From 3,000 tons at Cleveland | do | 126 | Lake Superior Hematite, Marquette county, Michigan. |
| 62 | Blair | do | From 1,000 tons at Cleveland | do | 105 | Winthrop, Marquette county, Michigan. |
| 63 | do | do | From 2,000 tons at Cleveland | do | 106 | do |
| 64 | Pitman | do | From 3,000 tons at Cleveland | do | 128 | Lowthian, Marquette county, Michigan. |
| 65 | Gooch | do | From 8,000 tons at Cleveland | Specular | 118 | Palmer, Marquette county, Michigan |
| 66 | Pitman | do | From 2,000 tons at Cleveland | Hematite | 123 | Cheshire, Marquette county, Michigan. |
| 67 | do | Putnam | From breast of ore on south side of pit No. 1 | Soft specular | 77 | Emmet, Menominee County, Michigan. |
| 68 | do | do | From exposure of ore near northwest side of pit No. 1. | Hematite | 78 | do |
| 69 | do | do | From 100 tons of ore at mine | Soft specular No. 2 | 79 | do |
| 70 | do | do | From 1,700 tons of ore at mine | Hematite | 80 | do |
| 71 | do | do | From 600 tons of ore at mine | Soft specular | 81 | do |
| 72 | do | do | From west side of pit No. 1 | Yellow ocher | 84 | do |
| 73 | Gooch | Willis | From 1,000 tons at Cleveland | Hematite | 125 | do |
| 74 | do | do | From 600 tons at Cleveland | Soft specular | 107 | do |
| 75 | Pitman | Putnam | From 125 tons of ore from drift in east pit | do | 76 | Breen, Menominee county, Michigan |
| 76 | do | do | From breast of ore on west side of west pit; "soft ore." | do | 82 | do |
| 77 | do | do | From breast of ore on west side of west pit; "hard ore." | do | 83 | do |
| 78 | Blair | do | From small piles of ore near exploration shafts and trench. | Hematite | 67 | Vulcan, section 11 (Lowell), Menominee county, Michigan. |
| 79 | do | do | From stope in east shaft, pit No. 3, 59 feet below surface. | Soft specular | 60 | Vulcan, Menominee county, Michigan. |
| 80 | do | do | In open part of pit No. 3, near foot-wall | do | 61 | do |
| 81 | do | do | From breast of ore on west side, pit No. 3 | do | 62 | do |
| 82 | do | do | From side of drift 100 feet west from west shaft, 57 feet below surface. | do | 63 | do |
| 83 | do | do | From 3,000 tons at mine | Hematitic schist | 64 | do |
| 84 | do | do | From old stope in pit No. 1 | Soft specular | 65 | do |
| 85 | do | do | From main stope in pit No. 1 | do | 66 | do |
| 86 | Pitman | Willis | From 1,000 tons at Cleveland | do | 134 | do |
| 87 | Gooch | Putnam | Specimens from bottom of west pit | do | 56 | Curry, Menominee county, Michigan |
| 88 | do | do | Specimens of soft powder from near bend in vein. | do | 57 | do |

TABLE 25.—*Partial analyses of iron ores*—Continued.

LAKE SUPERIOR REGION—Continued.

| NATURAL ORE. | | | DRIED ORE. | | | P. ratio. | |
|---|---|---|---|---|---|---|---|
| P. | Fe. | Miscellaneous. | P. | Fe. | Miscellaneous. | | |
| *P. cent.* | *P. cent.* | | *P. cent.* | *P. cent.* | | *P. cent.* | |
| 0.050 | 64.81 | S 0.053 p. ct.; $SiO_2$ 4.62 p. ct.; $Al_2O_3$ 1.92 p. ct.; Mn. trace; insoluble, 5.86 p. ct. specific gravity, 4.872. | 0.050 | 64.81 | S 0.053 p. ct.; $SiO_2$ 4.62 p. ct.; $Al_2O_3$ 1.92 p. ct.; Mn. trace; insoluble, 5.86 p. ct. | 0.077 | 43 |
| 0.081 | 67.52 | S 0.008 p. ct.; $SiO_2$ 2.78 p. ct.; $Al_2O_3$ 2.03 p. ct.; Mn. 0.00; $TiO_2$ 0.00; insoluble, 4.61 p. ct.; specific gravity, 4.917. | 0.081 | 67.56 | S 0.008 p. ct.; $SiO_2$ 2.78 p. ct.; $Al_2O_3$ 2.03 p. ct.; Mn. 0.00; $TiO_2$ 0.00; insoluble, 4.61 p. ct. | 0.120 | 44 |
| 0.042 | 67.03 | S 0.054 p. ct.; $SiO_2$ 2.33 p. ct.; $Al_2O_3$ 1.30 p. ct.; Mn. 0.00; $TiO_2$ 0.00; insoluble, 3.05 p. ct. | 0.042 | 67.07 | S 0.054 p. ct.; $SiO_2$ 2.33 p. ct.; $Al_2O_3$ 1.30 p. ct.; Mn. 0.00; $TiO_2$ 0.00; insoluble, 3.05 p. ct. | 0.062 | 45 |
| 0.062 | 69.13 | S 0.022 p. ct.; $SiO_2$ 1.60 p. ct.; $Al_2O_3$ 1.00 p. ct.; Mn. 0.00; $TiO_2$ 0.00; insoluble 2.09 p. ct. | 0.062 | 69.16 | S 0.022 p. ct.; $SiO_2$ 1.60 p. ct.; $Al_2O_3$ 1.00 p. ct.; Mn. 0.00; $TiO_2$ 0.00; insoluble, 2.09 p. ct. | 0.090 | 46 |
| 0.033 | 47.13 | S 0.066 p. ct; $SiO_2$ 27.99 p. ct; $Al_2O_3$ 1.65 p. ct.; Mn. present; $TiO_2$ 0.00; insoluble, 28.34 p. ct.; specific gravity, 3.996. | 0.033 | 47.25 | S 0.066 p. ct.; $SiO_2$ 27.86 p. ct.; $Al_2O_3$ 1.65 p. ct.; Mn. present; $TiO_2$ 0.00; insoluble, 28.41 p. ct. | 0.070 | 47 |
| 0.077 | 41.54 | S 0.00; $SiO_2$ 23.89 p. ct.; $Al_2O_3$ 3.00 p. ct.; Mn. present; $TiO_2$ 0.00; insoluble, 25.10 p. ct.; specific gravity, 4.296. | 0.077 | 41.66 | S 0.00; $SiO_2$ 23.96 p. ct.; $Al_2O_3$ 3.00 p. ct.; Mn. present; $TiO_2$ 0.00; insoluble, 25.17 p. ct. | 0.185 | 48 |
| 0.090 | 54.85 | Specific gravity, 4.049 | 0.090 | 54.93 | | 0.163 | 49 |
| 0.028 | 59.27 | S 0.040 p. ct.; specific gravity, 4.320. Complete analysis. | 0.028 | 59.44 | S 0.040 p. ct. | 0.047 | 50 |
| 0.026 | 55.47 | S 0.010 p. ct.; specific gravity, 4.575. Complete analysis. | 0.026 | 55.80 | S 0.010 p. ct. | 0.046 | 51 |
| 0.058 | 52.43 | S 0.155 p. ct.; $SiO_2$ 12.61 p. ct.; $Al_2O_3$ 2.88 p. ct.; Mn. present; insoluble, 15.19 p. ct.; specific gravity, 4.044. | 0.058 | 52.64 | S 0.155 p. ct.; $SiO_2$ 12.66 p. ct.; $Al_2O_3$ 2.89 p. ct.; Mn. present; insoluble, 15.26. | 0.111 | 52 |
| 0.140 | 61.71 | S 0.078 p. ct.; $SiO_2$ 3.77 p. ct.; $Al_2O_3$ 1.75 p. ct.; Mn. present; $TiO_2$ 0.00; insoluble, 4.82 p. ct.; specific gravity, 4.488. | 0.140 | 61.85 | S 0.078 p. ct.; $SiO_2$ 3.78 p. ct.; $Al_2O_3$ 1.75 p. ct.; Mn. present; $TiO_2$ 0.00; insoluble, 4.83 p. ct. | 0.227 | 53 |
| 0.096 | 54.88 | S 0.093 p. ct.; $SiO_2$ 11.17 p. ct.; $Al_2O_3$ 2.40 p. ct.; Mn. present; $TiO_2$ 0.00; insoluble, 12.40 p. ct.; specific gravity, 4.475. | 0.096 | 55.16 | S 0.09 p. ct.; $SiO_2$ 11.23 p. ct.; $Al_2O_3$ 2.41 p. ct.; Mn. present; $TiO_2$ 0.00; insoluble, 12.46 p. ct. | 0.175 | 54 |
| 0.063 | 49.05 | S 0.043 p. ct.; $SiO_2$ 21.83 p. ct.; $Al_2O_3$ 2.70 p. ct.; Mn. 0.00; $TiO_2$ 0.07 p. ct.; insoluble, 23.00 p. ct.; specific gravity, 3.722. | 0.063 | 49.38 | S 0.043 p. ct.; $SiO_2$ 21.98 p. ct.; $Al^2O_3$ 2.72 p. ct.; Mn. 0.00; $TiO_2$ 0.07 p. ct.; insoluble, 23.15 p. ct. | 0.128 | 55 |
| 0.082 | 57.52 | S 0.059 p. ct.; $SiO_2$ 8.55 p. ct.; $Al_2O_3$ 2.70 p. ct.; Mn. present; $TiO_2$ 0.00; insoluble, 10.80 p. ct.; specific gravity, 3.765. | 0.082 | 57.65 | S 0.059 p. ct.; $SiO_2$ 8.57 p. ct.; $Al_2O_3$ 2.71 p. ct.; Mn. present; $TiO_2$ 0.00; insoluble, 10.82 p. ct. | 0.143 | 56 |
| 0.056 | 59.34 | S 0.057 p. ct.; $SiO_2$ 7.23 p. ct.; $Al_2O_3$ 3.04 p. ct.; Mn. present; $TiO_2$ 0.00; insoluble, 9.12 p. ct.; specific gravity, 4.727. | 0.056 | 59.59 | S 0.057 p. ct.; $SiO_2$ 7.26 p. ct.; $Al_2O_3$ 3.04 p. ct.; Mn. present; $TiO_2$ 0.00; insoluble, 9.16 p. ct. | 0.094 | 57 |
| 0.047 | 61.97 | | 0.047 | 62.08 | | 0.076 | 58 |
| 0.188 | 61.00 | Specific gravity, 4.592 | 0.188 | 62.06 | | 0.304 | 59 |
| 0.128 | 59.95 | S 0.055 p. ct.; $SiO_2$ 5.18 p. ct.; $Al_2O_3$ 3.43 p. ct.; Mn. present; $TiO_2$ 0.00; insoluble, 6.55; specific gravity, 4.011. | 0.128 | 60.12 | S 0.055 p. ct.; $SiO_2$ 5.19 p. ct.; $Al_2O_3$ 3.44 p. ct.; Mn. present; $TiO_2$ 0.00; insoluble, 6.57 p. ct. | 0.214 | 60 |
| 0.064 | 59.94 | S 0.003 p. ct.; $SiO_2$ 6.26 p. ct.; $Al_2O_3$ 1.64 p. ct.; Mn. present; $TiO_2$ 0.00; insoluble, 7.74 p. ct.; specific gravity, 3.975. | 0.064 | 60.08 | S 0.003 p. ct.; $SiO_2$ 6.27 p. ct.; $Al_2O_3$ 1.64 p. ct.; Mn. present; $TiO_2$ 0.00; insoluble, 7.76 p. ct. | 0.107 | 61 |
| 0.043 | 50.54 | S 0.055 p. ct.; $SiO_2$ 23.66 p. ct.; $Al_2O_3$ 1.66 p. ct.; Mn. present; $TiO_2$ 0.00; insoluble, 24.79 p. ct.; specific gravity, 4.065. | 0.043 | 50.66 | S 0.055 p. ct.; $SiO_2$ 23.72 p. ct.; $Al_2O_3$ 1.66 p. ct.; Mn. present; $TiO_2$ 0.00; insoluble, 24.85 p. ct. | 0.085 | 62 |
| 0.053 | 49.45 | S 0.045 p. ct.; $SiO_2$ 25.25 p. ct.; $Al_2O_3$ 1.94 p. ct.; Mn. present; $TiO_2$ 0.00; insoluble, 26.41 p. ct. | 0.053 | 49.51 | S 0.045 p. ct.; $SiO_2$ 25.28 p. ct.; $Al_2O_3$ 1.94 p. ct.; Mn. present; $TiO_2$ 0.00; insoluble, 26.45 p. ct. | 0.107 | 63 |
| 0.086 | 56.27 | S 0.078 p. ct.; $SiO_2$ 14.19 p. ct.; $Al_2O_3$ 0.12 p. ct.; Mn. present; $TiO_2$ 0.00; insoluble, 14.56 p. ct.; specific gravity, 4.104. | 0.086 | 56.48 | S 0.078 p. ct.; $SiO_2$ 14.24 p. ct.; $Al_2O_3$ 0.12 p. ct.; Mn. present; $TiO_2$ 0.00; insoluble, 14.61 p. ct. | 0.153 | 64 |
| 0.066 | 58.67 | S 0.038 p. ct.; $SiO_2$ 8.08 p. ct.; $Al_2O_3$ 5.50 p. ct.; Mn. 0.00; $TiO_2$ 0.00; insoluble, 11.38 p. ct.; specific gravity, 4.527. | 0.066 | 58.67 | S 0.038 p. ct.; $SiO_2$ 8.08 p. ct.; $Al_2O_3$ 5.50 p. ct.; Mn. 0.00; $TiO_2$ 0.00; insoluble, 11.38 p. ct. | 0.112 | 65 |
| 0.053 | 58.69 | S 0.083 p. ct.; $SiO_2$ 6.59 p. ct.; $Al_2O_3$ 1.24 p. ct.; Mn. present; $TiO_2$ 0.00; insoluble, 9.14 p. ct.; specific gravity, 4.073. | 0.053 | 58.78 | S 0.083 p. ct.; $SiO_2$ 6.60 p. ct.; $Al_2O_3$ 1.24 p. ct.; Mn. present; $TiO_2$ 0.00; insoluble, 9.15 p. ct. | 0.090 | 66 |
| 0.008 | 52.97 | Specific gravity, 4.393 | 0.008 | 53.01 | | 0.015 | 67 |
| 0.103 | 50.58 | Specific gravity, 4.044 | 0.103 | 50.63 | | 0.204 | 68 |
| 0.018 | 40.96 | Specific gravity, 3.688 | 0.018 | 40.96 | | 0.044 | 69 |
| 0.076 | 42.19 | Specific gravity, 3.621 | 0.076 | 42.24 | | 0.180 | 70 |
| 0.027 | 56.07 | Specific gravity, 4.342 | 0.027 | 56.12 | | 0.048 | 71 |
| 0.107 | 22.54 | Specific gravity, 3.116 | 0.107 | 22.60 | | 0.475 | 72 |
| 0.135 | 47.34 | S 0.095 p. ct.; $SiO_2$ 20.95 p. ct.; $Al_2O_3$ 1.68 p. ct.; Mn. present; $TiO_2$ 0.00; insoluble, 21.76 p. ct.; specific gravity, 3.814. | 0.135 | 47.48 | S 0.095 p. ct.; $SiO_2$ 21.01 p. ct.; $Al_2O_3$ 1.68 p. ct.; Mn. present; $TiO_2$ 0.00; insoluble, 21.83 p. ct. | 0.285 | 73 |
| 0.058 | 38.53 | S 0.199 p. ct.; $SiO_2$ 40.83 p. ct.; $Al_2O_3$ 1.32 p. ct.; Mn. 0.00; $TiO_2$ 0.00; insoluble, 41.62 p. ct.; specific gravity, 4.973. | 0.058 | 38.54 | S 0.199 p. ct.; $SiO_2$ 40.84 p. ct.; $Al_2O_3$ 1.32 p. ct.; Mn. 0.00; $TiO_2$ 0.00; insoluble, 41.63 p. ct. | 0.151 | 74 |
| 0.026 | 50.17 | Specific gravity, 3.447 | 0.026 | 50.28 | | 0.052 | 75 |
| 0.012 | 59.79 | Specific gravity, 4.590 | 0.012 | 59.97 | | 0.020 | 76 |
| 0.005 | 53.14 | Specific gravity, 3.515 | 0.005 | 53.37 | | 0.009 | 77 |
| 0.006 | 58.33 | Specific gravity, 4.822 | 0.006 | 58.36 | | 0.010 | 78 |
| 0.001 | 67.62 | S 0.050 p. ct.; specific gravity, 5.086. Complete analysis. | 0.001 | 67.62 | S 0.50 p. ct. | 0.001 | 79 |
| 0.014 | 58.41 | Specific gravity, 4.221 | 0.014 | 58.71 | | 0.024 | 80 |
| 0.001 | 66.00 | Specific gravity, 4.878 | 0.001 | 66.08 | | 0.002 | 81 |
| 0.001 | 66.73 | Specific gravity, 4.961 | 0.001 | 66.80 | | 0.002 | 82 |
| 0.013 | 34.69 | Specific gravity, 3.114 | 0.013 | 35.00 | | 0.037 | 83 |
| 0.001 | 62.89 | S 0.023 p. ct.; specific gravity, 4.371. Complete analysis. | 0.001 | 62.95 | S 0.023 p. ct. | 0.002 | 84 |
| 0.005 | 62.38 | Specific gravity, 4.599 | 0.005 | 62.41 | | 0.008 | 85 |
| 0.024 | 62.60 | S 0.075 p. ct.; $SiO_2$ 4.98 p. ct.; $Al_2O_3$ 2.20 p. ct.; Mn. 0.00; $TiO_2$ 0.00; insoluble, 6.03 p. ct.; specific gravity, 4.745. | 0.024 | 62.76 | S 0.075 p. ct.; $SiO_2$ 4.98 p. ct.; $Al_2O_3$ 2.20 p. ct.; Mn. 0.00; $TiO_2$ 0.00; insoluble, 6.03 p. ct. | 0.038 | 86 |
| 0.062 | 60.49 | Specific gravity, 4.164 | 0.062 | 60.58 | | 0.093 | 87 |
| 0.010 | 67.40 | Specific gravity, 5.001 | 0.010 | 67.47 | | 0.015 | 88 |

TABLE 25.—*Partial analyses of iron ores*—Continued.

LAKE SUPERIOR REGION—Continued.

| | Chemist. | Sampler. | Remarks. | Kind of ore. | Number. | Name and location of mine. |
|---|---|---|---|---|---|---|
| 89 | Gooch | Putnam | Specimens from bottom of main pit | Soft specular | 58 | Curry, Menominee county, Michigan |
| 90 | do | do | Specimens from near hanging-wall, main pit | do | 59 | do |
| 91 | Pitman | do | Across west side of east pit No. 1 | Hematite | 48 | Saginaw, section 4 (Perkins), Menominee county, Michigan. |
| 92 | do | do | From east side of pit No. 3, near hanging-wall | Specular | 49 | do |
| 93 | do | do | Across breast in east side of pit No. 3 | Hematite | 50 | do |
| 94 | do | do | From west side of pit No. 2, from foot-wall to "horse." | Specular | 51 | do |
| 95 | do | do | From 1,700 tons of ore from pits Nos. 1 and 2 | Hematite | 52 | do |
| 96 | do | do | From 2,000 tons of ore from pits Nos. 3 and 4 | do | 53 | do |
| 97 | do | do | From east side of pit No. 4 | do | 54 | do |
| 98 | Gooch | do | From 9-foot seam of ore, with bright greenish mineral. | Soft specular | 42 | Stephenson, Menominee county, Michigan. |
| 99 | do | do | In same stope, 2-foot seam, near hanging-wall | Specular | 43 | do |
| 100 | do | do | In same stope, 1-foot seam, near foot-wall | Soft specular | 44 | do |
| 101 | do | do | In same stope, 3-foot seam, between Nos. 43 and 44 | do | 45 | do |
| 102 | do | do | From 75 tons of ore from shaft near property line. | Specular | 46 | do |
| 103 | do | do | From 1,500 tons at mine | Soft specular | 47 | do |
| 104 | Pitman | do | Fragments from line of test pits, extending west from top of new incline. | Specular | 31 | Norway, Menominee county, Michigan. |
| 105 | do | do | From stope in pit No. 9, near hanging-wall | Conglomerate | 32 | do |
| 106 | do | do | From stope in pit No. 9, near foot-wall | Soft specular | 33 | do |
| 107 | do | do | From stope and broken ore in pit No. 8; "soft ore." | Hematite | 34 | do |
| 108 | do | do | Selected clippings of "hard ore" in pit No. 8 | Specular | 35 | do |
| 109 | do | do | From "hard ore" on west side of pit No. 11 | do | 36 | do |
| 110 | do | do | From stope and broken ore in pit No. 6; ore with yellowish green mineral. | Hematite | 37 | do |
| 111 | do | do | From stope in pit No. 6; average output | do | 38 | do |
| 112 | do | do | From west side of pit No. 4 | do | 39 | do |
| 113 | do | do | From 75 tons of ore from pit No. 2 | do | 40 | do |
| 114 | do | do | From 2,000 tons of ore from pits Nos. 3, 4, 5, 6, 7, 8, and 9. | do | 41 | do |
| 115 | do | do | From 10 car loads of ore from pit No. 11 | do | 55 | do |
| 116 | do | Willis | From 6,000 tons at Cleveland | do | 135 | do |
| 117 | Gooch | Putnam | From near foot-wall in pit No. 2, stope west of shaft No. 2. | Soft specular | 27 | Cyclops, Menominee county, Michigan. |
| 118 | do | do | From near foot-wall, stope east of shaft No. 2 | do | 28 | do |
| 119 | do | do | From breast of ore east end of pit No. 1, omitting band 10 feet wide next foot-wall. | do | 29 | do |
| 120 | do | do | From same breast, entirely across the ore | do | 30 | do |
| 121 | do | Willis | From 1,000 tons at Cleveland | do | 117 | do |
| 122 | Blair | Putnam | From stope, pit No. 2, third level | do | 16 | Quinnesec, Menominee county, Michigan. |
| 123 | do | do | From stope, pit No. 2, near hanging-wall; ore with greenish mineral. | do | 17 | do |
| 124 | do | do | From stope, pit No. 1, third level | do | 18 | do |
| 125 | do | do | Selected clippings of "hard ore" in pit No. 1 | Soft specular and hematite. | 19 | do |
| 126 | do | do | From stope, pit No. 3, third level | Soft specular | 20 | do |
| 127 | do | do | From stope, pit No. 2, second level; "curly ore" | do | 21 | do |
| 128 | Gooch | Willis | From 4,000 tons at Cleveland | do | 119 | do |
| 129 | do | Putnam | From 750 tons of ore from shaft | do | 68 | McKenna, N. E. of S. E. Sec. 32, T. 40, R. 30, Menominee county, Michigan. |
| 130 | do | do | From 50 tons of ore from west test pit | do | 69 | McKenna, N. W. of S. E. Sec. 32, T. 40, R. 30, Menominee county, Michigan. |
| 131 | do | do | From near foot-wall at bottom of shaft No. 2 | Hematite | 25 | Chapin, Menominee county, Michigan. |
| 132 | do | do | From 900 tons of ore from shaft No. 3 | Soft specular | 26 | do |
| 133 | do | do | From a few tons of ore from shaft No. 1 | Martite | 26a | do |
| 134 | do | do | From 150 tons of ore at mine | Soft specular | 24 | Ludington, Menominee county, Michigan. |
| 135 | Blair | do | Across vein of "red ore" exposed in stripping | Hematite | 22 | Cornell, Menominee county, Michigan. |
| 136 | do | do | Across vein of "blue ore" exposed in stripping | Soft specular | 23 | do |
| 137 | Gooch, Whitfield | do | From 700 tons of ore from 36-foot and 68-foot veins. | Specular | 72 | Commonwealth, Sec. 34, Marinette county, Wisconsin. |
| 138 | do | do | From sides of shaft in 14-foot vein | do | 73 | do |
| 139 | Gooch | do | From 200 tons of ore at shaft | Martite (?) | 70 | Commonwealth, Sec. 32, Marinette county, Wisconsin. |
| 140 | do | do | From trench 250 feet west of shaft, 5 feet below surface. | Hematite | 71 | do |
| 141 | Pitman | do | From fragments of ore near test shaft | Specular | 74 | Eagle (Florence), N. E. of S. E. Sec. 20, T. 40, R. 18, Marinette county, Wisconsin. |
| 142 | do | do | do | do | 75 | Eagle (Florence), S. W. of N. E. Sec. 20, T. 40, R. 18, Marinette county, Wisconsin. |

TABLE 25.—*Partial analyses of iron ores*—Continued.

LAKE SUPERIOR REGION—Continued.

| NATURAL ORE. | | | DRIED ORE. | | | P. ratio. | |
|---|---|---|---|---|---|---|---|
| P. | Fe. | Miscellaneous. | P. | Fe. | Miscellaneous. | | |
| *P. cent.* | *P. cent.* | | *P. cent.* | *P. cent.* | | *P. cent.* | |
| 0.008 | 67.53 | Specific gravity, 5.173 | 0.008 | 67.63 | | 0.012 | 89 |
| 0.005 | 67.03 | Specific gravity, 4.998 | 0.005 | 67.10 | | 0.007 | 90 |
| 0.005 | 59.86 | Specific gravity, 3.969 | 0.005 | 59.90 | | 0.008 | 91 |
| 0.006 | 59.47 | Specific gravity, 4.224 | 0.006 | 59.53 | | 0.010 | 92 |
| 0.008 | 51.71 | | 0.008 | 51.86 | | 0.015 | 93 |
| 0.032 | 63.25 | | 0.032 | 63.26 | | 0.051 | 94 |
| 0.007 | 57.37 | Specific gravity, 4.377 | 0.007 | 57.43 | | 0.012 | 95 |
| 0.006 | 56.91 | Specific gravity, 4.109 | 0.006 | 56.97 | | 0.010 | 96 |
| 0.004 | 59.39 | Specific gravity, 4.632 | 0.004 | 59.43 | | 0.007 | 97 |
| 0.094 | 56.47 | Specific gravity, 4.360 | 0.094 | 56.48 | | 0.166 | 98 |
| 0.068 | 63.53 | Specific gravity, 4.705 | 0.068 | 63.68 | | 0.107 | 99 |
| 0.086 | 52.59 | Specific gravity, 4.271 | 0.086 | 52.60 | | 0.163 | 100 |
| 0.048 | 61.48 | Specific gravity, 4.083 | 0.048 | 61.55 | | 0.078 | 101 |
| 0.069 | 52.78 | S 0.004 p. ct.; specific gravity, 4.621. Complete analysis. | 0.069 | 52.80 | S 0.004 p. ct. | 0.131 | 102 |
| 0.081 | 58.20 | Specific gravity, 4.241 | 0.081 | 58.21 | | 0.139 | 103 |
| 0.047 | 60.20 | S 0.043 p. ct. Complete analysis, see p. 61 | 0.047 | 60.20 | S 0.043 p. ct. | 0.078 | 104 |
| 0.035 | 49.50 | Specific gravity, 3.936 | 0.035 | 49.58 | | 0.071 | 105 |
| 0.030 | 59.72 | Specific gravity, 3.836 | 0.030 | 59.73 | | 0.050 | 106 |
| 0.045 | 52.97 | Specific gravity, 3.647 | 0.045 | 53.53 | | 0.085 | 107 |
| 0.014 | 58.35 | Specific gravity, 4.675 | 0.014 | 58.39 | | 0.024 | 108 |
| 0.010 | 59.26 | Specific gravity, 4.576 | 0.010 | 59.27 | | 0.032 | 109 |
| 0.084 | 62.73 | S 0.058 p. ct.; specific gravity, 4.894. Complete analysis. | 0.084 | 62.90 | S 0.058 p. ct. | 0.134 | 110 |
| 0.064 | 62.08 | Specific gravity, 4.516 | 0.064 | 62.22 | | 0.103 | 111 |
| 0.108 | 61.94 | Specific gravity, 4.543 | 0.108 | 62.04 | | 0.174 | 112 |
| 0.060 | 51.09 | S 0.058 p. ct.; specific gravity, 3.926. Complete analysis. | 0.060 | 51.14 | S 0.058 p. ct. | 0.099 | 113 |
| 0.068 | 56.12 | | 0.068 | 56.18 | | 0.121 | 114 |
| 0.041 | 57.30 | Specific gravity, 4.399 | 0.041 | 57.44 | | 0.071 | 115 |
| 0.057 | 55.49 | S 0.071 p. ct.; $SiO_2$ 16.03 p. ct.; $Al_2O_3$ 1.78 p. ct.; Mn. present; $TiO_2$ 0.00; insoluble, 16.86 p. ct.; specific gravity, 4.226. | 0.057 | 55.63 | S 0.071 p. ct.; $SiO_2$ 16.07 p. ct.; $Al_2O_3$ 1.79 p. ct.; Mn. present; $TiO_2$ 0.00; insoluble, 16.90 p. ct. | 0.103 | 116 |
| 0.013 | 53.58 | Specific gravity, 3.777 | 0.013 | 53.71 | | 0.024 | 117 |
| 0.012 | 29.58 | Specific gravity, 2.971 | 0.012 | 29.79 | | 0.041 | 118 |
| 0.012 | 65.90 | Specific gravity, 4.933 | 0.012 | 65.95 | | 0.018 | 119 |
| 0.013 | 64.38 | Specific gravity, 3.478 | 0.013 | 64.48 | | 0.020 | 120 |
| 0.013 | 62.05 | S 0.066 p. ct.; $SiO_2$ 5.61 p. ct.; $Al_2O_3$ 2.50 p. ct.; Mn. 0.00; $TiO_2$ 0.00; insoluble, 6.31 p. ct.; specific gravity, 4.401. | 0.013 | 62.27 | S 0.066 p. ct.; $SiO_2$ 5.00 p. ct.; $Al_2O_3$ 2.50 p. ct.; Mn. 0.00; $TiO_2$ 0.00; insoluble, 6.31 p. ct. | 0.021 | 121 |
| 0.010 | 61.81 | S 0.050 p. ct.; specific gravity, 4.264. Complete analysis. | 0.010 | 61.93 | S 0.050 p. ct. | 0.016 | 122 |
| 0.009 | 55.49 | S 0.059 p. ct.; specific gravity, 4.146. Complete analysis. | 0.009 | 55.58 | S 0.059 p. ct. | 0.016 | 123 |
| 0.012 | 66.39 | S 0.086 p. ct.; specific gravity, 4.701. Complete analysis. | 0.012 | 66.40 | S 0.086 p. ct. | 0.018 | 124 |
| 0.005 | 64.47 | S 0.050 p. ct.; specific gravity, 4.882. Complete analysis. | 0.005 | 64.47 | S 0.050 p. ct. | 0.008 | 125 |
| 0.009 | 65.60 | S 0.053 p. ct.; specific gravity, 4.518. Complete analysis. | 0.009 | 65.63 | S 0.053 p. ct. | 0.014 | 126 |
| 0.008 | 64.38 | Specific gravity, 4.331 | 0.008 | 64.52 | | 0.012 | 127 |
| 0.038 | 63.49 | S 0.008 p. ct.; $SiO_2$ 5.52 p. ct.; $Al_2O_3$ 1.87 p. ct.; Mn. trace; insoluble, 7.00 p. ct.; specific gravity, 5.006. | 0.038 | 63.51 | S 0.008 p. ct.; $SiO_2$ 5.52 p. ct.; $Al_2O_3$ 1.87 p. ct.; Mn. trace; insoluble, 7.00 p. ct. | 0.060 | 128 |
| 0.061 | 54.39 | S 0.00; specific gravity, 4.187. Complete analysis. | 0.061 | 54.51 | S 0.00 | 0.112 | 129 |
| 0.005 | 50.00 | | 0.005 | 50.03 | | 0.010 | 130 |
| 0.011 | 62.65 | S 0.018 p. ct.; specific gravity, 4.534. Complete analysis. | 0.011 | 62.77 | S 0.018 p. ct. | 0.018 | 131 |
| 0.007 | 65.97 | S 0.001 p. ct.; specific gravity, 4.404. Complete analysis. | 0.007 | 66.02 | S 0.001 p. ct. | 0.011 | 132 |
| 0.014 | 50.43 | | 0.014 | 50.51 | | 0.028 | 133 |
| 0.008 | 62.23 | Specific gravity, 4.027 | 0.008 | 62.32 | | 0.013 | 134 |
| 0.043 | 58.06 | S 0.059 p. ct.; specific gravity, 4.694. Complete analysis. | 0.043 | 58.12 | S 0.059 p. ct. | 0.074 | 135 |
| 0.032 | 56.99 | S 0.078 p. ct. Complete analysis | 0.032 | 57.08 | S 0.078 p. ct. | 0.056 | 136 |
| 0.205 | 60.25 | S 0.000 | 0.205 | 60.38 | S 0.000 | 0.340 | 137 |
| 0.239 | 57.84 | Complete analysis of 72 and 73 together | 0.239 | 57.95 | | 0.413 | 138 |
| 0.172 | 59.61 | S 0.370 p. ct.; specific gravity, 4.980. Complete analysis. | 0.172 | 59.64 | S 0.370 p. ct. | 0.288 | 139 |
| 0.041 | 46.21 | Specific gravity, 4.269 | 0.042 | 47.94 | | 0.088 | 140 |
| 0.369 | 54.91 | Specific gravity, 4.511 | 0.369 | 54.98 | | 0.672 | 141 |
| 0.285 | 59.17 | Specific gravity, 4.186 | 0.285 | 59.17 | | 0.482 | 142 |

TABLE 25.—*Partial analyses of iron ores*—Continued.

ALABAMA.

| | Chemist. | Sampler. | Remarks. | Kind of ore. | Number. | Name and location of mine. |
|---|---|---|---|---|---|---|
| 1 | White | Chauvenet | From 100 tons from pit | Fossil | 201 | De Bardeleben, Sec. 6, T. 18, R. 2 W., Jefferson county. |
| 2 | do | do | From face of ore near end of entry seam No. 1 | do | 202 | Eureka, Sec. 21, T. 18, R. 3 W., Jefferson county. |
| 3 | do | do | From face of seam No. 2 (3-foot vein) | do | 203 | do |
| 4 | King | do | From stock pile at furnace; a mixture of ores from seams Nos. 1 and 2. | do | 205 | do |
| 5 | do | do | From outcrops, seams Nos. 1 and 2 | do | 204 | Outcrop, Sec. 30, T. 18, R. 3 W., Jefferson county. |
| 6 | do | do | From stock pile at Oxmoor furnace | Carbonate (burnt) | 207 | Newcastle Coal Co., Sec. 17, T. 16, R. 2 W., Jefferson county. |
| 7 | do | do | From face of Finch seam of ore on side-wall, north end of main entry. | Carbonate | 208 | do |
| 8 | do | do | From face of 12½-inch seam of ore in same entry | do | 209 | do |
| 9 | White | do | From outcrop in mill-race | Fossil | 210 | Outcrop, Sec. 30, T. 15, R. 1 W., Jefferson county. |
| 10 | do | do | From outcrop on creek | do | 211 | do |
| 11 | do | do | From scattered surface fragments | Limonite | 212 | Van's land, Sec. 9, T. 16, R. 1 W., Jefferson county. |
| 12 | do | do | From outcrop of 4-foot seam on "Hickman's place." | Fossil | 213 | Outcrop, Sec. 10, T. 16, R. 1 W., Jefferson county. |
| 13 | King | do | From outcrop on "Hickman's place" | do | 214 | Outcrop, Sec. 2, T. 16, R. 1 W., Jefferson county. |
| 14 | do | do | From outcrops on road, "Hickman's place" | do | 215 | Outcrop, Sec. 15, T. 16, R. 1 W., Jefferson county. |
| 15 | White | do | From surface fragments near old pit | Limonite | 221 | O'd Ore Pit, Sec. 25, T. 17, R. 1 W., Jefferson county. |
| 16 | King | do | From pile of ore near old workings | Fossil | 222 | Irondale, T. 17, R. 2 W., Jefferson county. |
| 17 | White | do | From face of ore 135 feet thick in prospecting pit on northwest slope of Red mountain. | do | 260 | M. L. Potter's property, Sec. 11, T. 19, R. 4 W., Jefferson county. |
| 18 | do | do | From seam of hard ore between upper and lower soft ores. | do | 261 | M. L. Potter's property, Sec. 2, T. 19, R. 4 W., Jefferson county. |
| 19 | King | do | From outcrops of two seams above main entry to mine. | do | 216 | Woodall, Sec. 28, T. 14, R. 2 E., Saint Clair county. |
| 20 | White | do | From face of 3- to 3½-foot seam | do | 217 | Saint Clair, Sec. 27, T. 14, R. 2 E., Saint Clair county. |
| 21 | do | do | From face of lower seam 110 feet below No. 217 | do | 218 | do |
| 22 | do | do | From face of seam on left of main tramway | do | 219 | Aderholt, Sec. 23, T. 14, R. 2 E., Saint Clair county. |
| 23 | do | do | From stock pile at railroad | do | 220 | do |
| 24 | King | do | From lumps of ore from prospecting pits | Limonite | 223 | Strickland bed, Secs. 10 and 11, T. 21, R. 6 W., Bibb county. |
| 25 | do | do | From exposure of bed on north side of branch, and from four prospecting pits along slope of hill. | do | 224 | Edward's bed, Secs. 10 and 11, T. 21, R. 6 W., Bibb county. |
| 26 | White | do | From outcropping bowlders along east side of creek. | do | 225 | Edward's, Sec. 3, T. 21, R. 6, W., Bibb county. |
| 27 | do | do | From loose fragments from pit | do | 226 | De Bardeleben, Sec. 11, T. 21, R. 6 W., Bibb county. |
| 28 | King | do | From two prospecting pits 400 yards apart | do | 231 | Ray's land, Sec. 15, T. 21, R. 6 W., Bibb county. |
| 29 | do | do | From fragments from prospecting pit | do | 232 | Ray's land, Sec. 16, T. 21, R. 6 W., Bibb county. |
| 30 | White | do | From old workings on west side of Montevallo road. | do | 234 | Brierfield, Sec. 21, T. 24, R. 11 E., Bibb county. |
| 31 | King | do | From 100 tons at Oxmoor furnace | do | 206 | Shelby Coal Co., Sec. 1, T. 21, R. 6 W., Tuscaloosa county. |
| 32 | White | do | From surface lumps from prospecting pit | Fossil | 227 | Shamblin & Dickey tract, Sec. 31, T. 20, R. 6 W., *Tuscaloosa county.* |
| 33 | do | do | From three openings, ¼ mile apart, along continuous ridge of ore. | Limonite | 228 | Pioneer Iron Co., Sec. 30, T. 20, R. 5 W., Tuscaloosa county. |
| 34 | do | do | From three openings 300 yards apart | do | 229 | Tuscaloosa Iron Co., Sec. 29, T. 20, R. 5 W., Tuscaloosa county. |
| 35 | do | do | From lumps in place of lower bed, south by west of washing machine. | do | 230 | Eureka, Sec. 2, T. 21, R. 6 W., Tuscaloosa county. |
| 36 | King | do | From outcrop on northeast side of branch | do | 233 | Woodward property, Sec. 10, T. 21, R. 6 W., Tuscaloosa county. |
| 37 | White | do | From washed ore at washer | do | 235 | Shelby, Sec. 13, T. 22, R. 1 W., Shelby county. |
| 38 | do | do | From pile of burnt ore at Shelby furnace | Limonite (burnt) | 236 | do |
| 39 | King | do | From face of "big ledge" at Shelby bank | Limonite | 237 | do |
| 40 | do | do | From cars at Alabama furnace | do | 238 | Talladega, Sec. 20, T. 18, R. 5 E., Talladega county. |
| 41 | do | do | From stock pile at Alabama furnace | do | 239 | Clifton bank, Sec. 26, T. 18, R. 6 E., Talladega county. |
| 42 | White | do | From 100 tons at mine | do | 241 | do |
| 43 | do | do | From 2 pits, 100 yards apart, on bed No. 6 | do | 242 | do |
| 44 | King | do | From fragments near old pit | do | 243 | do |
| 45 | White | do | From bowlders of ore in working face of open cut. | do | 240 | Alabama furnace, S. 17, T. 17, R. 7 E., Talladega county. |
| 46 | King | do | From cars at Woodstock furnaces | do | 244 | Sparks bank, T. 19, R. 4 E., Talladega county. |
| 47 | do | do | From 10 tons of ore on cars at Woodstock furnaces. | do | 245 | Side bank, T. 19, R. 4 E., Talladega county. |
| 48 | do | do | From 3 car-loads at Woodstock furnaces; "clay ore." | do | 246 | Glover bank, Sec. 21, T. 15, R. 8 E., Calhoun county. |
| 49 | do | do | From ore in 2 adjoining pits | do | 247 | Old Oxford bank, Sec. 7, T. 15, R. 8 E., Calhoun county. |
| 50 | White | do | | do | 259 | do |
| 51 | King | do | On working face | do | 248 | Skinner bank, T. 15, R. 8 E., Calhoun county. |

TABLE 25.—*Partial analyses of iron ores*—Continued.

ALABAMA.

| NATURAL ORE. | | | DRIED ORE. | | | P. ratio. | |
|---|---|---|---|---|---|---|---|
| P. | Fe. | Miscellaneous. | P. | Fe. | Miscellaneous. | | |
| *P. cent.* | *P. cent.* | | *P. cent.* | *P. cent.* | | *P. cent.* | |
| 0.200 | 46.80 | | 0.201 | 47.05 | | 0.429 | 1 |
| 0.219 | 51.25 | S 0.140 p. ct. Complete analysis | 0.220 | 51.60 | S 0.140 p. ct. | 0.426 | 2 |
| 0.519 | 50.40 | | 0.521 | 50.64 | | 1.030 | 3 |
| 0.225 | 50.89 | | 0.226 | 51.17 | | 0.442 | 4 |
| 0.067 | 56.69 | | 0.067 | 56.87 | | 0.118 | 5 |
| 0.228 | 43.49 | | 0.228 | 43.54 | | 0.524 | 6 |
| 0.115 | 8.38 | $TiO_2$ absent | 0.116 | 8.45 | $TiO_2$ absent | 1.372 | 7 |
| 0.194 | 29.48 | | 0.195 | 29.58 | | 0.658 | 8 |
| 0.324 | 36.58 | | 0.325 | 36.73 | | 0.886 | 9 |
| 0.031 | 28.22 | | 0.031 | 28.42 | | 0.216 | 10 |
| 0.301 | 51.94 | | 0.302 | 52.12 | | 0.580 | 11 |
| 0.085 | 59.99 | | 0.085 | 60.27 | | 0.142 | 12 |
| 0.102 | 18.18 | | 0.102 | 18.23 | | 0.561 | 13 |
| 0.051 | 44.16 | | 0.051 | 44.40 | | 0.115 | 14 |
| 0.057 | 52.30 | | 0.057 | 52.51 | | 0.109 | 15 |
| 0.161 | 36.41 | | 0.161 | 36.51 | | 0.442 | 16 |
| 0.152 | 54.15 | Specific gravity, 4.177 | 0.153 | 54.50 | | 0.281 | 17 |
| 0.319 | 40.04 | Specific gravity, 3.694 | 0.320 | 40.12 | | 0.797 | 18 |
| 0.292 | 48.68 | | 0.295 | 49.11 | | 0.600 | 19 |
| 0.261 | 53.28 | | 0.265 | 54.07 | | 0.490 | 20 |
| 0.435 | 49.49 | | 0.441 | 50.17 | | 0.879 | 21 |
| 0.409 | 45.45 | | 0.414 | 45.96 | | 0.960 | 22 |
| 0.348 | 48.40 | | 0.353 | 49.09 | | 0.719 | 23 |
| 0.944 | 48.16 | | 0.954 | 48.66 | | 1.960 | 24 |
| 0.878 | 41.48 | | 0.880 | 41.68 | | 2.117 | 25 |
| 0.764 | 47.11 | Specific gravity, 3.509 | 0.769 | 47.40 | | 1.622 | 26 |
| 0.221 | 46.54 | Specific gravity, 3.483 | 0.223 | 46.94 | | 0.475 | 27 |
| 0.923 | 47.77 | Specific gravity, 3.502 | 0.932 | 48.22 | | 1.932 | 28 |
| 0.266 | 54.26 | Specific gravity, 3.720 | 0.267 | 54.54 | | 0.490 | 29 |
| 0.265 | 49.12 | Specific gravity, 3.614 | 0.266 | 49.36 | | 0.540 | 30 |
| 0.250 | 44.12 | | 0.262 | 44.57 | | 0.587 | 31 |
| 0.048 | 49.49 | Specific gravity, 3.958 | 0.048 | 49.80 | | 0.097 | 32 |
| 0.401 | 48.59 | Specific gravity, 3.544 | 0.495 | 49.03 | | 1.010 | 33 |
| 1.021 | 48.12 | Specific gravity, 3.488 | 1.032 | 48.63 | | 2.122 | 34 |
| 0.179 | 46.59 | S 0.318 p. ct.; specific gravity, 3.458. Complete analysis. | 0.181 | 47.00 | S 0.320 p. ct. | 0.385 | 35 |
| 0.444 | 56.12 | Specific gravity, 3.771 | 0.446 | 56.35 | | 0.791 | 36 |
| 0.241 | 52.82 | S 0.139 p. ct.; specific gravity, 3.725. Complete analysis. | 0.243 | 53.26 | S 0.140 p. ct | 0.456 | 37 |
| 0.282 | 53.92 | Specific gravity, 3.763 | 0.284 | 54.38 | | 0.523 | 38 |
| 0.137 | 49.64 | Specific gravity, 3.617 | 0.138 | 50.18 | | 0.276 | 39 |
| 0.181 | 54.23 | Specific gravity, 3.814 | 0.182 | 54.44 | | 0.334 | 40 |
| 0.047 | 52.40 | Specific gravity, 3.746 | 0.047 | 52.71 | | 0.090 | 41 |
| 0.011 | 48.74 | Specific gravity, 3.668 | 0.011 | 49.00 | | 0.023 | 42 |
| 0.041 | 52.22 | S 0.109 p. ct.; specific gravity, 3.732. Complete analysis. | 0.041 | 52.51 | S 0.110 p. ct. | 0.078 | 43 |
| 0.100 | 51.98 | Specific gravity, 3.727 | 0.100 | 52.20 | | 0.193 | 44 |
| 0.912 | 53.45 | Specific gravity, 3.707 | 0.918 | 53.83 | | 1.706 | 45 |
| 0.118 | 54.09 | Specific gravity, 3.804 | 0.118 | 54.16 | | 0.218 | 46 |
| 0.149 | 47.12 | Specific gravity, 3.433 | 0.151 | 47.69 | | 0.316 | 47 |
| 0.048 | 45.37 | Specific gravity, 3.510 | 0.048 | | | 0.105 | 48 |
| 0.147 | 49.92 | Specific gravity, 3.711 | 0.148 | 50.11 | | 0.296 | 49 |
| 0.068 | 53.72 | Specific gravity, 3.844 | 0.068 | 53.83 | | 0.127 | 50 |
| 0.031 | 48.62 | Specific gravity, 3.671 | 0.318 | 49.02 | | 0.063 | 51 |

TABLE 25.—*Partial analyses of iron ores*—Continued.

ALABAMA—Continued.

| | Chemist. | Sampler. | Remarks. | Kind of ore. | Number. | Name and location of mine. |
|---|---|---|---|---|---|---|
| 52 | White | Chauvenet | From washer at mine | Limonite | 249 | Washer bank, Sec. 7, T. 15, R. 8 E., Calhoun county. |
| 53 | King | do | From stock pile of 2,000 tons at Tecumseh furnace. | do | 256 | Jacksonville, Sec. 12, T. 14, R. 8 E., Calhoun county. |
| 54 | White | do | From outcropping bowlders southeast of furnace. | do | 250 | Stonewall (lower bank), Sec. 15, T. 12, R. 11 E., Cherokee county. |
| 55 | do | do | From three wagon loads | do | 251 | Stonewall (upper bank), Sec. 15, T. 12, R. 11 E., Cherokee county. |
| 56 | do | do | From wagons direct from bank | do | 252 | Tecumseh Iron Company, Sec. 18, T. 12, R. 12 E., Cherokee county. |
| 57 | do | do | do | do | 253 | Tecumseh Iron Company, Sec. 29, T. 12, R. 12 E., Cherokee county. |
| 58 | do | do | From unlighted roast heap, 2,000 to 3,000 tons | do | 254 | Tecumseh Iron Company, T. 12, R. 12 E, Cherokee county. |
| 59 | King | do | From all parts of large open cut | do | 255 | Tecumseh Iron Company, Sec. 30, T. 12, R. 12 E., Cherokee county. |
| 60 | do | do | From loose lumps thrown from newly opened pit. | do | 257 | Hardin bank, Sec. 32, T. 11, R. 11 E., Cherokee county. |
| 61 | White | do | From three pits on the bank | do | 258 | Furnace bank, Sec. 5, T. 12, R. 11 E., Cherokee county. |
| 62 | do | do | From stock pile at furnace | Fossil | 262 | Round Mountain furnace bank, Sec. 33, T. 9, R. 9 E., Cherokee county. |
| 63 | King | do | From 2 tons left at blowing out of furnace | Fossil (roasted) | 263 | do |
| 64 | do | do | From four pits on bank | Fossil | 264 | do |
| 65 | do | do | From tunnel on crown of vein | do | 265 | Attala, Sec. 34, T. 11, R. 5 E., Etowah county. |
| 66 | do | do | From 800 to 1,000 tons on stock pile | do | 266 | do |
| 67 | do | do | From tunneled ore at mine | do | 267 | do |
| 68 | do | do | From stock pile, 150 tons of ore from tunnel only. | do | 268 | Attala (Rising Fawn), Sec. 34, T. 11, R. 5 E., Etowah county. |
| 69 | do | do | On stock pile at South Pittsburgh furnaces | do | 270 | Attala, Sec. 34, T. 11, R. 5 E., Etowah county. |
| 70 | do | do | do | do | 271 | do |
| 71 | Pitman | Willis | From eastern slope of ridge; surface pieces | Limonite | 1201 | Near Pendergrass property, Oxford, Calhoun county. |
| 72 | do | do | From outcrop | do | 1202 | do |
| 73 | do | do | From surface fragments in plowed field | Magnetite | 1203 | J. M. Kennedy's land, Oxford, Clay county. |
| 74 | do | do | From surface pieces in the road | Limonite | 1204 | T. B. Fleming's land, Russellville, Franklin county. |
| 75 | do | do | From surface fragments in the field | do | 1205 | Dr. Sevier's land, Russellville, Franklin county. |
| 76 | do | do | From bank | Bog | 1206 | Old Iron Works, Vernon, Lamar county. |
| 77 | do | do | From pile of ore roasted 12 years ago | Bog (roasted) | 1207 | do |

CALIFORNIA.

| | | | | | | |
|---|---|---|---|---|---|---|
| 1 | Whitfield | Putnam | From 30 tons of ore near outcrop | Magnetite | 1170 | Clipper Gap, Clipper Gap station, Placer county. |
| 2 | do | do | From a few tons of ore from test pit ¼ mile southwest of furnace. | do | 1171 | do |
| 3 | do | do | From 350 tons of ore at mine | Limonite | 1172 | Clipper Gap Hematite, Clipper Gap station, Placer county. |
| 4 | do | do | Two sacks of ore in Mr. Adams' office in San Francisco. | Hematite | 1173 | Adams, near Saint Helena, Napa county. |

COLORADO.

| | | | | | | |
|---|---|---|---|---|---|---|
| 1 | Whitfield | Putnam | From old stock pile near furnace, and pieces from surface of plains in neighborhood. | Limonite | 1104 | Near Marshall's coal mine, New Boulder, Boulder county. |
| 2 | do | do | Selected pieces of bright black-surfaced ore from Caribou Hill. | Magnetite | 1105 | Caribou Hill, near Caribou, Boulder county. |
| 3 | do | do | From dump near western opening | do | 1106 | do |
| 4 | do | do | Outcrop, western opening | Magnetite (?) | 1107 | Jefferson County iron mines, near Morrison, Jefferson county. |
| 5 | do | do | From face of lower drift | Magnetite | 1108 | Ainsworth, near Placer station, Costilla county. |
| 6 | do | do | From face of upper drift | do | 1108a | do |
| 7 | do | do | In lower drift | Magnetite (altered) | 1109 | Stoddard, near Placer station, Costilla county. |
| 8 | do | do | From about 500 tons of ore at bottom of incline; from the upper drift and open cut. | Magnetite | 1110 | do |
| 9 | do | do | From small seam of ore above the El Mora coal seam. | Carbonate and limonite | 1111 | El Mora coal mine, near Trinidad, Las Animas county. |
| 10 | do | do | Lump of spathic ore on plains 3 miles south of Walsenburgh. | Carbonate | 1112 | Plains near Walsenburgh, Huerfano county. |
| 11 | do | do | On plains 3 miles south of Walsenburgh | do | 1113 | do |
| 12 | King | do | From southwestern part of hill | Magnetite | 1114 | "Iron Mountain", "Grape Cr.", near Pine Cr., Fremont county. |
| 13 | do | do | From south end of hill on vein No. 4 | do | 1115 | do |
| 14 | do | do | From south end of hill on vein No. 6 | do | 1116 | do |
| 15 | do | do | From near shaft on vein No. 3 | do | 1117 | do |

TABLE 25.—*Partial analyses of iron ores*—Continued.

ALABAMA—Continued.

| Natural ore. | | | Dried ore. | | | P. ratio. | |
|---|---|---|---|---|---|---|---|
| P. | Fe. | Miscellaneous. | P. | Fe. | Miscellaneous. | | |
| *P. cent.* | *P. cent.* | | *P. cent.* | *P. cent.* | | *P. cent.* | |
| 0.113 | 52.14 | Specific gravity, 3.728 | 0.114 | 52.46 | | 0.217 | 52 |
| 0.541 | 40.64 | Specific gravity, 3.458 | 0.545 | 40.91 | | 1.331 | 53 |
| 0.676 | 41.45 | Specific gravity, 3.716 | 0.681 | 41.73 | | 1.631 | 54 |
| 0.301 | 42.52 | Specific gravity, 3.484 | 0.302 | 42.69 | | 0.708 | 55 |
| 0.108 | 50.04 | S 0.179 p. ct.; specific gravity, 3.706. Complete analysis. | 0.108 | 50.25 | S 0.180 p. ct | 0.215 | 56 |
| 0.584 | 48.44 | Specific gravity, 3.584 | 0.589 | 48.83 | | 1.206 | 57 |
| 0.908 | 51.50 | Specific gravity, 3.662 | 0.916 | 51.96 | | 1.701 | 58 |
| 0.838 | 52.07 | Specific gravity, 3.711 | 0.846 | 52.54 | | 1.665 | 59 |
| 0.749 | 54.15 | Specific gravity, 3.778 | 0.754 | 54.49 | | 1.383 | 60 |
| 0.342 | 54.96 | Specific gravity, 3.820 | 0.343 | 55.16 | | 0.622 | 61 |
| 0.084 | 59.03 | | 0.084 | 59.20 | | 0.142 | 62 |
| 0.104 | 58.39 | Specific gravity, 4.425 | 0.105 | 58.74 | | 0.178 | 63 |
| 0.098 | 57.18 | Specific gravity, 4.326 | 0.099 | 57.58 | | 0.171 | 64 |
| 0.640 | 54.48 | Specific gravity, 4.109 | 0.645 | 54.89 | | 1.174 | 65 |
| 0.487 | 53.78 | | 0.488 | 53.91 | | 0.906 | 66 |
| 0.641 | 53.60 | S 0.085 p. ct.; specific gravity, 4.110. Complete analysis. | 0.648 | 54.15 | S 0.086 p. ct | 1.197 | 67 |
| 0.430 | 56.04 | Specific gravity, 4.201 | 0.433 | 56.42 | | 0.767 | 68 |
| 0.412 | 45.98 | Specific gravity, 3.577 | 0.420 | 46.87 | | 0.896 | 69 |
| 0.375 | 31.30 | Specific gravity, 3.386 | 0.377 | 31.49 | | 1.198 | 70 |
| 0.423 | 58.29 | | 0.425 | 58.63 | | 0.726 | 71 |
| 0.184 | 54.86 | | 0.185 | 55.19 | | 0.335 | 72 |
| 0.664 | 58.51 | $SiO_2$ 10.47 p. ct.; Mn. present; $TiO_2$ 0.00; insoluble, 15.68 p. ct. | 0.664 | 58.60 | $SiO_2$ 10.47 p. ct.; Mn. present; $TiO_2$ 0.00; insoluble, 15.68 p. ct. | 0.169 | 73 |
| 0.500 | 55.60 | | 0.506 | 56.17 | | 1.061 | 74 |
| 0.527 | 56.89 | | 0.530 | 57.23 | | 0.926 | 75 |
| 0.191 | 55.04 | | 0.194 | 55.85 | | 0.347 | 76 |
| 0.265 | 62.65 | $TiO_2$ absent | 0.265 | 62.72 | $TiO_2$ absent | 0.423 | 77 |

CALIFORNIA.

| | | | | | | | |
|---|---|---|---|---|---|---|---|
| 0.068 | 67.68 | | 0.068 | 67.84 | | 0.100 | 1 |
| 0.047 | 64.98 | | 0.047 | 65.19 | | 0.072 | 2 |
| 0.178 | 53.41 | | 0.183 | 55.01 | | 0.333 | 3 |
| 1.870 | 47.45 | | 1.870 | 48.05 | | 3.941 | 4 |

COLORADO.

| | | | | | | | |
|---|---|---|---|---|---|---|---|
| 0.305 | 47.89 | | 0.309 | 48.54 | | 0.637 | 1 |
| 0.017 | 59.04 | $TiO_2$ present | 0.017 | 59.04 | $TiO_2$ present | 0.029 | 2 |
| 0.022 | 35.35 | do | 0.022 | 35.35 | do | 0.062 | 3 |
| 0.069 | 20.56 | | 0.069 | 20.58 | | 0.336 | 4 |
| 0.016 | 59.23 | | 0.016 | 59.44 | | 0.027 | 5 |
| 0.008 | 47.24 | | 0.008 | 47.39 | | 0.017 | 6 |
| 0.039 | 55.56 | | 0.039 | 56.04 | | 0.070 | 7 |
| 0.059 | 52.58 | | 0.059 | 52.86 | | 0.112 | 8 |
| 0.047 | 51.46 | | 0.047 | 53.02 | | 0.091 | 9 |
| 1.190 | 27.71 | $CO_2$ present | 1.196 | 27.86 | $CO_2$ present | 4.258 | 10 |
| 0.556 | 15.63 | do | 0.561 | 15.66 | do | 3.557 | 11 |
| 0.025 | 48.89 | Mn. absent; $TiO_2$ 11.99 p. ct | 0.025 | 49.09 | Mn. absent; $TiO_2$ 12.04 p. ct | 0.051 | 12 |
| 0.026 | 48.18 | Mn. present; $TiO_2$ 12.92 p. ct | 0.026 | 48.25 | Mn. present; $TiO_2$ 12.94 p. ct | 0.054 | 13 |
| 0.037 | 46.61 | Mn. present; $TiO_2$ 11.61 p. ct | 0.037 | 46.70 | Mn. present; $TiO_2$ 11.63 p. ct | 0.079 | 14 |
| 0.011 | 48.85 | Mn. present; $TiO_2$ 12.73 p. ct | 0.011 | 48.89 | Mn. present; $TiO_2$ 12.74 p. ct | 0.023 | 15 |

TABLE 25.—*Partial analyses of iron ores*—Continued.

COLORADO—Continued.

| | Chemist. | Sampler. | Remarks. | Kind of ore. | Number. | Name and location of mine. |
|---|---|---|---|---|---|---|
| 16 | King | Putnam | From near top of hill on vein No. 4 | Magnetite | 1118 | "Iron Mountain", "Grape Cr.", near Pine Cr., Frémont county. |
| 17 | do | do | From near top of hill on vein No. 5 | do | 1119 | do |
| 18 | do | do | From near top of hill on vein No. 7 | do | 1120 | do |
| 19 | do | do | From dump from shaft | Limonite | 1121 | Beehive, near Villa Grove, Saguache county. |
| 20 | do | do | From dump near shaft | do | 1122 | Prospect lode, near Villa Grove, Saguache county. |
| 21 | do | do | Selected pieces from dump | do | 1123 | Poorman's lode, near Villa Grove, Saguache county. |
| 22 | do | do | From along side of drift | do | 1124 | McClellan lode, near Villa Grove, Saguache county. |
| 23 | do | do | From dump | Hematite | 1125 | Saguache lode, near Villa Grove, Saguache county. |
| 24 | Whitfield | do | In bottom of slope 68 feet from surface, on dip of vein. | Magnetite | 1176 | Calumet, near South Arkansas, Chaffee county. |
| 25 | do | do | From prospect hole | do | 1176x | Hecla, near South Arkansas, Chaffee county. |
| 26 | King | do | Near the south slope | Specular hematite | 1126 | Breece, Leadville, Lake county |
| 27 | do | do | Stock pile ore, all from south slope | do | 1127 | do |
| 28 | do | do | From upper shaft | do | 1128 | do |
| 29 | do | do | Selected from a few tons of ore at the mine | Manganiferous (black ore). | 1129 | Amie, Leadville, Lake county |
| 30 | do | do | Selected from a few tons of ore at the mine | Limonite (red ore) | 1130 | do |
| 31 | do | do | From 500 tons at Grant's smelter | Limonite (red and black ore). | 1131 | do |
| 32 | do | do | From 25 tons of crushed ore at Holland smelter | Magnetite | 1132 | Holland smelter, near Hamilton, Park county. |

CONNECTICUT.

| | | | | | | |
|---|---|---|---|---|---|---|
| 1 | Whitfield | Putnam | From mine | Brecciated ore | 772 | Kent, Kent, Litchfield county |
| 2 | do | do | From 100 tons of rock ore at mine | Limonite | 773 | do |
| 3 | do | do | From 300 tons of washed ore at mine | do | 774 | do |
| 4 | do | do | From 30 tons washed ore from Adams tract at mine. | do | 775 | Chatfield, Salisbury, Litchfield county |
| 5 | do | do | From 40 tons washed ore from Reed tract at mine. | do | 776 | do |
| 6 | do | do | From 45 tons washed ore from Fitch tract at mine. | do | 777 | do |
| 7 | do | do | From rock ore from Reed tract at mine | do | 778 | do |
| 8 | do | do | From rock ore from Fitch tract at mine | do | 779 | do |
| 9 | do | do | | "Slacks" | 780 | do |
| 10 | do | do | From selected pieces at mine | Limonite (crystallized) | 781 | Brookpit (Old Hill), Salisbury, Litchfield county. |
| 11 | do | do | From selected pieces of stalactic ore at mine | Limonite | 782 | do |
| 12 | do | do | From 5 cars of rock ore at mine | do | 783 | do |
| 13 | do | do | From 3 cars of washed ore at mine | do | 784 | do |
| 14 | do | do | From 20 tons of washed ore at mine | do | 785 | Davis, Salisbury, Litchfield county |
| 15 | do | do | From 15 tons "Manganese ore" at mine | "Manganese" | 786 | do |
| 16 | do | do | Earthy manganese from mine | do | 787 | do |
| 17 | do | do | From a few tons rock ore at mine | Limonite | 788 | do |
| 18 | do | do | From 50 tons rock ore at new mine | do | 789 | Scoville, Salisbury, Litchfield county |

DELAWARE.

| | | | | | | |
|---|---|---|---|---|---|---|
| 1 | Richmond | Benton | From ore ready for shipment at railroad | Limonite | 1025 | Chestnut Hill, Chestnut Hill, New Castle county. |
| 2 | do | do | do | do | 1026 | East Chestnut Hill, Chestnut Hill, New Castle county. |
| 3 | do | do | From several tons unwashed ore at washer; from southerly part of mine. | do | 1027 | Iron Hill, Iron Hill, New Castle county |
| 4 | do | do | From several tons washed ore at furnace | Limonite (washed) | 1028 | do |

GEORGIA.

| | | | | | | |
|---|---|---|---|---|---|---|
| 1 | White | Willis | From one wagon load | Limonite | 418 | Jarrett's bank, near Morgantown, Fannin county. |
| 2 | do | do | From pile of roasted ore | do | 419 | do |
| 3 | do | do | Stamped, washed, and roasted ore | do | 420 | do |
| 4 | do | do | From exposure of ore in pit | do | 421 | Judge Donaldson's, near Canton, Cherokee county. |
| 5 | do | do | Bluish earth accompanying ore | do | 422 | do |
| 6 | do | do | Hard compact ore from the vein at bank | do | 423 | Bartow furnace bank, near Bartow furnace, Cartersville, Bartow county. |
| 7 | do | do | Soft friable ore, from same banks as No. 423 | do | 424 | do |
| 8 | do | do | Angular fragments of hard ore, from same banks as Nos. 423 and 424. | do | 425 | do |
| 9 | do | do | From pit | do | 426 | Bartow furnace bank, directly north of Bartow furnace, Cartersville, Bartow county. |
| 10 | do | do | From vein in small pit | do | 427 | Wheeler bank (northern end), Cartersville, Bartow county. |

TABLE 25.—*Partial analyses of iron ores*—Continued.

COLORADO—Continued.

| NATURAL ORE. | | | DRIED ORE. | | | P. ratio. | |
|---|---|---|---|---|---|---|---|
| P. | Fe. | Miscellaneous. | P. | Fe. | Miscellaneous. | | |
| *P. cent.* | *P. cent.* | | *P. cent.* | *P. cent.* | | *P. cent.* | |
| 0.040 | 46.05 | Mn. present; $TiO_2$ 13.84 p. ct | 0.040 | 46.15 | Mn. present; $TiO_2$ 13.87 p. ct. | 0.087 | 16 |
| 0.039 | 47.01 | Mn. present; $TiO_2$ 14.86 p. ct | 0.039 | 47.04 | Mn. present; $TiO_2$ 14.87 p. ct. | 0.083 | 17 |
| 0.026 | 47.42 | Mn. present; $TiO_2$ 13.04 p. ct | 0.026 | 47.46 | Mn. present; $TiO_2$ 13.05 p. ct. | 0.055 | 18 |
| 0.026 | 54.47 | Mn. present | 0.026 | 54.71 | Mn. present | 0.048 | 19 |
| 0.058 | 55.56 | do | 0.058 | 55.84 | do | 0.104 | 20 |
| 0.055 | 51.64 | Mn. trace | 0.056 | 52.47 | Mn. trace | 0.106 | 21 |
| 0.034 | 55.61 | Mn. present | 0.034 | 55.87 | Mn. present | 0.061 | 22 |
| 0.045 | 45.39 | do | 0.046 | 46.83 | do | 0.099 | 23 |
| 0.026 | 49.23 | | 0.026 | 49.39 | | 0.053 | 24 |
| 0.008 | 48.03 | | 0.008 | 48.03 | | 0.017 | 25 |
| 0.017 | 64.35 | | 0.017 | 64.52 | | 0.026 | 26 |
| 0.038 | 61.51 | | 0.038 | 61.73 | | 0.062 | 27 |
| 0.024 | 63.25 | | 0.024 | 63.47 | | 0.038 | 28 |
| 0.058 | 40.95 | $TiO_2$ absent; Mn. present | 0.058 | 41.20 | $TiO_2$ absent; Mn. present | 0.142 | 29 |
| 0.076 | 50.20 | do | 0.077 | 50.75 | do | 0.151 | 30 |
| 0.049 | 44.38 | do | 0.049 | 44.76 | do | 0.110 | 31 |
| 0.040 | 63.01 | do | 0.040 | 63.03 | do | 0.063 | 32 |

CONNECTICUT.

| | | | | | | | |
|---|---|---|---|---|---|---|---|
| 0.196 | 30.82 | | 0.197 | 30.97 | | 0.636 | 1 |
| 0.315 | 53.02 | | 0.318 | 53.52 | | 0.594 | 2 |
| 0.353 | 50.48 | | 0.350 | 50.97 | | 0.699 | 3 |
| 0.128 | 35.10 | | 0.129 | 35.42 | | 0.365 | 4 |
| 0.113 | 40.03 | | 0.114 | 40.34 | | 0.282 | 5 |
| 0.100 | 44.04 | | 0.101 | 44.43 | | 0.227 | 6 |
| 0.103 | 44.38 | Mn. present; BaO present | 0.104 | 44.84 | Mn. present; BaO present | 0.232 | 7 |
| 0.120 | 48.02 | | 0.121 | 48.58 | | 0.250 | 8 |
| 0.071 | 15.96 | | 0.071 | 16.06 | | 0.445 | 9 |
| 0.101 | 55.37 | | 0.102 | 55.91 | | 0.182 | 10 |
| 0.452 | 57.00 | | 0.458 | 57.76 | | 0.793 | 11 |
| 0.196 | 50.12 | S 0.150 p. ct. Complete analysis | 0.198 | 50.53 | S 0.151 p. ct | 0.393 | 12 |
| 0.162 | 44.80 | | 0.163 | 45.11 | | 0.362 | 13 |
| 0.059 | 44.50 | | 0.060 | 45.08 | | 0.132 | 14 |
| 0.045 | 27.46 | Mn. 26.60 p. ct | 0.045 | 27.74 | Mn. 26.87 p. ct | 0.164 | 15 |
| 0.068 | 2.24 | Mn. 25.81 p. ct | 0.069 | 2.27 | Mn. 26.19 p. ct | | 16 |
| 0.073 | 41.55 | | 0.074 | 42.19 | | 0.176 | 17 |
| 1.000 | 54.47 | | 1.009 | 54.94 | | 1.836 | 18 |

DELAWARE.

| | | | | | | | |
|---|---|---|---|---|---|---|---|
| 0.095 | 43.11 | | 0.097 | 43.83 | | 0.220 | 1 |
| 0.313 | 37.13 | | 0.322 | 38.20 | | 0.843 | 2 |
| 0.063 | 51.27 | | 0.064 | 51.99 | | 0.123 | 3 |
| 0.096 | 52.60 | | 0.098 | 53.62 | | 0.183 | 4 |

GEORGIA.

| | | | | | | | |
|---|---|---|---|---|---|---|---|
| 0.284 | 53.41 | Specific gravity, 3.708 | 0.287 | 53.92 | | 0.532 | 1 |
| 0.265 | 57.83 | | 0.276 | 60.23 | | 0.458 | 2 |
| 0.331 | 57.40 | Specific gravity, 4.121 | 0.336 | 58.25 | | 0.577 | 3 |
| 0.660 | 52.70 | Specific gravity, 3.708 | 0.667 | 53.29 | | 1.252 | 4 |
| 0.139 | 48.47 | | 0.140 | 48.86 | | 0.287 | 5 |
| 1.911 | 50.57 | | 1.952 | 51.67 | | 3.779 | 6 |
| 0.488 | 53.67 | Specific gravity, 3.871 | 0.495 | 54.49 | | 0.909 | 7 |
| 0.319 | 40.35 | | 0.321 | 40.61 | | 0.791 | 8 |
| 0.332 | 52.46 | Specific gravity, 3.739 | 0.335 | 52.91 | | 0.633 | 9 |
| 0.802 | 56.57 | Specific gravity, 3.778 | 0.807 | 56.92 | | 1.418 | 10 |

TABLE 25.—*Partial analyses of iron ores*—Continued.

GEORGIA—Continued.

| | Chemist. | Sampler. | Remarks. | Kind of ore. | Number. | Name and location of mine. |
|---|---|---|---|---|---|---|
| 11 | White | Willis | From large open cut | Limonite | 428 | Wheeler bank, northeast of Wheeler's house, Cartersville, Bartow county. |
| 12 | do | do | Hard ore forming walls of cavities | do | 429 | Crow bank, northeast of Wheeler's house, Cartersville, Bartow county. |
| 13 | do | do | Soft ore from same bank as No. 429 | do | 430 | do |
| 14 | do | do | From exposure of ore in bank | do | 431 | Irish bank, northeast of Wheeler's house, Cartersville, Bartow county. |
| 15 | do | do | do | do | 432 | Black bank, northeast of Wheeler's house, Cartersville, Bartow county. |
| 16 | do | do | From pile of ore at Diamond furnace | do | 433 | Wildcat bank, near Cartersville, Bartow county. |
| 17 | do | do | At Diamond furnace, roasted ore | do | 434 | do |
| 18 | do | do | From vein of ore in bank | do | 435 | Peach tree bank, Cartersville, Bartow county. |
| 19 | King | do | From pile mined for Diamond furnace | do | 436 | Big bank, Cartersville, Bartow county. |
| 20 | do | do | From 3 tons of ore | do | 437 | Connor bank, Cartersville, Bartow county. |
| 21 | do | do | From bank | do | 438 | Burford bank, Cartersville, Bartow county. |
| 22 | do | do | do | do | 439 | Munford bank, Cartersville, Bartow county. |
| 23 | do | do | do | do | 440 | Giton bank, Cartersville, Bartow county. |
| 24 | do | do | do | Specular | 441 | Gray ore bank, Etowah river, Bartow county. |
| 25 | do | do | From vein in new opening | do | 472 | do |
| 26 | do | do | From few pieces by side of test trench | Limonite | 473 | Caldwell bank, near Kingston, Bartow county. |
| 27 | White | do | From eastern opening | do | 442 | Wood's bank, near Cherokee furnace, Cedartown, Polk county. |
| 28 | do | do | From southern opening | do | 443 | do |
| 29 | do | do | From western opening | do | 444 | do |
| 30 | do | do | From bank | do | 445 | Peck bank, near Cherokee furnace, Cedartown, Polk county. |
| 31 | do | do | From 10 tons at Cherokee furnace | do | 446 | Phillips bank, near Cherokee furnace, Cedartown, Polk county. |
| 32 | do | do | From extensive outcrop | do | 447 | Fisher's Creek bank, Cedartown, Polk county. |
| 33 | do | do | From stock pile at furnace | do | 448 | Pennington bank, Prior's station, Polk county. |
| 34 | do | do | From ledge of ore | do | 450 | Folger bank, Prior's station, Polk county. |
| 35 | do | do | From small opening on vein | do | 451 | Snake Pond bank, Prior's station, Polk county. |
| 36 | do | do | From small exposure in vein | do | 452 | do |
| 37 | do | do | From stock pile at furnace | do | 449 | Alloway bank, Etna furnace, Polk county. |
| 38 | King | Chauvenet | From stock pile at South Pittsburgh furnace | do | 269 | S. B. Lowe's, Folger Switch, Polk county. |
| 39 | White | Willis | From opening in western face of hill | do | 453 | Ridge Valley furnace banks, near Rome, Floyd county. |
| 40 | do | do | From opening on hill farthest from furnace | do | 454 | do |
| 41 | do | do | From compact slaty ore near old pit | do | 455 | do |
| 42 | do | do | From ½ ton of ore at bank | do | 456 | Flower Branch bank, near Rome, Floyd county. |
| 43 | King | do | From exposure of ore in old pit | do | 474 | Snake Creek bank, Snake Creek Gap, Walker county. |
| 44 | do | do | From fragments of ore from test pit | Fossil | 475 | Holland's, Trickum, Whitfield county. |
| 45 | do | do | From surface fragments | Limonite | 476 | J. R. Harris, near Spring Place, Murray county. |
| 46 | do | do | From fragments near old shaft | do | 477 | Garrison Poteet's, Alaculsie valley, Murray county. |
| 47 | Whitfield | do | From pile of ore near test pit | do | 478 | Calico bank, Alaculsie valley, Murray county. |

KENTUCKY.

| | | | | | | |
|---|---|---|---|---|---|---|
| 1 | White | Chauvenet | From lumps of ore from main vein | Carbonate | 583 | Bath furnace banks, Olympian Springs, Bath county. |
| 2 | do | do | From three banks within 3 miles of furnace | do | 584 | do |
| 3 | do | do | From southwest slope of hill | Limonite | 585 | Old slate bank, near Owingsville, Bath county. |
| 4 | do | do | From whole face of vein | Carbonate | 586 | Anderson bank, Estill furnace, Powell county. |
| 5 | King | do | From small pit recently opened | do | 587 | do |
| 6 | do | do | From stock pile of 600 tons unburnt ore at furnace. | do | 588 | Estill furnace banks, Estill county |
| 7 | do | do | From all parts of bank | Limonite | 589 | Schoolhouse bank, Center furnace, Lyon county. |
| 8 | do | do | From all working faces | do | 590 | Fulton bank, Center furnace, Lyon county. |
| 9 | do | do | From roof and wall of northeast side of room | do | 591 | Center bank, Center furnace, Lyon county. |
| 10 | do | do | From exposures of ore in main banks | do | 592 | Trigg furnace banks, Trigg county |

TABLE 25.—*Partial analyses of iron ores*—Continued.

GEORGIA—Continued.

| NATURAL ORE. | | | DRIED ORE. | | | P. ratio. | |
|---|---|---|---|---|---|---|---|
| P. | Fe. | Miscellaneous. | P. | Fe. | Miscellaneous. | | |
| *P. cent.* | *P. cent.* | | *P. cent.* | *P. cent.* | | *P. cent.* | |
| 1.612 | 51.62 | | 1.643 | 52.62 | | 3.123 | 11 |
| 1.124 | 50.24 | Specific gravity, 3.465 | 1.138 | 50.95 | | 1.999 | 12 |
| 0.502 | 59.20 | Specific gravity, 4.201 | 0.511 | 60.29 | | 0.848 | 13 |
| 0.540 | 57.42 | | 0.544 | 57.88 | | 0.940 | 14 |
| 0.752 | 54.71 | | 0.757 | 55.10 | | 1.374 | 15 |
| 0.668 | 50.64 | S 0.179 p ct.; specific gravity, 3.634. Complete analysis. | 0.672 | 50.96 | S 0.180 p. ct | 1.319 | 16 |
| 0.755 | 63.40 | Specific gravity, 4.322 | 0.763 | 64.06 | | 1.191 | 17 |
| 0.442 | 59.16 | | 0.448 | 60.00 | | 0.747 | 18 |
| 0.649 | 54.84 | Mn. 0.12 p. ct | 0.657 | 55.50 | Mn. 0.12 p. ct | 1.183 | 19 |
| 0.112 | 60.12 | | 0.113 | 60.75 | | 0.186 | 20 |
| 0.201 | 54.36 | Mn. 0.35 p. ct.; specific gravity, 3.848 | 0.202 | 54.61 | Mn. 0.35 p. ct | 0.370 | 21 |
| 0.330 | 55.69 | S 0.008 p. ct.; specific gravity, 3.863. Complete analysis. | 0.331 | 55.87 | S 0.008 p. ct | 0.592 | 22 |
| 0.457 | 48.90 | Mn. 1.61 p. ct.; specific gravity, 3.680 | 0.461 | 49.34 | Mn. 1.61 p. ct | 0.935 | 23 |
| 0.038 | 53.89 | $SiO_2$ 21.79 p. ct | 0.038 | 53.97 | $SiO_2$ 21.79 p. ct | 0.071 | 24 |
| 0.010 | 57.00 | S 0.006 p. ct.; specific gravity, 4.445. Complete analysis. | 0.010 | 57.00 | S 0.006 p. ct | 0.018 | 25 |
| 0.415 | 53.04 | Specific gravity, 3.644 | 0.420 | 53.74 | | 0.782 | 26 |
| 1.134 | 47.21 | $TiO_2$ trace | 1.146 | 47.71 | $TiO_2$ trace | 2.402 | 27 |
| 1.256 | 54.71 | Specific gravity, 3.744 | 1.269 | 55.28 | | 2.296 | 28 |
| 1.537 | 49.50 | Specific gravity, 3.511 | 1.567 | 50.46 | | 3.105 | 29 |
| 1.080 | 53.86 | Specific gravity, 3.728 | 1.091 | 54.41 | | 2.005 | 30 |
| 0.178 | 55.54 | | 0.179 | 55.82 | | 0.320 | 31 |
| 0.570 | 46.60 | Specific gravity, 3.581 | 0.574 | 46.91 | | 1.223 | 32 |
| 0.936 | 55.00 | | 0.943 | 55.42 | | 1.702 | 33 |
| 0.412 | 43.80 | | 0.414 | 44.06 | | 0.939 | 34 |
| 0.156 | 42.06 | | 0.157 | 42.37 | | 0.347 | 35 |
| 0.092 | 35.43 | Specific gravity, 3.301 | 0.092 | 35.50 | | 0.260 | 36 |
| 0.413 | 54.90 | Specific gravity, 3.778 | 0.415 | 55.22 | | 0.752 | 37 |
| 0.604 | 42.60 | | 0.604 | 42.60 | | 1.418 | 38 |
| 0.086 | 57.21 | | 0.086 | 57.46 | | 0.150 | 39 |
| 0.095 | 54.12 | | 0.097 | 55.19 | | 0.176 | 40 |
| 0.044 | 41.89 | Specific gravity, 3.574 | 0.044 | 42.25 | | 0.105 | 41 |
| 0.095 | 51.62 | | 0.095 | 51.86 | | 0.184 | 42 |
| 1.360 | 51.41 | S 0.258 p. ct.; specific gravity, 3.662. Complete analysis. | 1.372 | 51.98 | S 0.260 p. ct | 2.636 | 43 |
| 0.191 | 58.36 | Specific gravity, 4.330 | 0.193 | 58.88 | | 0.327 | 44 |
| 0.691 | 55.35 | Specific gravity, 3.814 | 0.705 | 56.48 | | 1.248 | 45 |
| 0.848 | 32.17 | Specific gravity, 3.201 | 0.885 | 32.44 | | 2.636 | 46 |
| 0.156 | 46.78 | | 0.158 | 47.38 | | 0.333 | 47 |

KENTUCKY.

| | | | | | | | |
|---|---|---|---|---|---|---|---|
| 0.183 | 50.65 | | 0.186 | 51.37 | | 0.361 | 1 |
| 0.282 | 44.51 | | 0.289 | 45.58 | | 0.634 | 2 |
| 1.094 | 51.58 | | 1.111 | 52.37 | | 2.121 | 3 |
| 0.273 | 34.94 | | 0.280 | 35.83 | | 0.781 | 4 |
| 0.181 | 47.51 | | 0.184 | 48.38 | | 0.381 | 5 |
| 0.528 | 45.50 | | 0.530 | 46.35 | | 1.160 | 6 |
| 0.099 | 49.23 | | 0.100 | 49.50 | | 0.201 | 7 |
| 0.273 | 48.03 | | 0.275 | 48.50 | | 0.568 | 8 |
| 0.120 | 47.25 | | 0.121 | 47.62 | | 0.254 | 9 |
| 0.104 | 48.81 | | 0.105 | 49.36 | | 0.213 | 10 |

TABLE 25.—*Partial analyses of iron ores*—Continued.

KENTUCKY—Continued.

| | Chemist. | Sampler. | Remarks. | Kind of ore. | Number. | Name and location of mine. |
|---|---|---|---|---|---|---|
| 11 | King | Chauvenet | From Reuben's Branch; "block ores" | Limonite | 593 | Pennsylvania furnace, Greenup county |
| 12 | do | do | From seam No. 4; "block ore" | Carbonate | 594 | do |
| 13 | do | do | Sample from 10-foot seam of "yellow kidney ore" | do | 596 | do |
| 14 | do | do | "Roll kidney" ore, from 44-foot level | do | 597 | do |
| 15 | do | do | "Rough and ready" or "China" ore, from 1-foot seam. | Limonite sand | 598 | do |
| 16 | do | do | From 2-inch seams of kidney ore | Carbonate | 595 | Pea Ridge (Blancet Bros.), Greenup county. |
| 17 | do | do | "Little block ore," from 2- to 8-inch seam | Limonite | 599 | Honeywell furnace, Greenup county |
| 18 | do | do | Specimen of one large kidney; not an average sample. | do | 600 | Turkey Lick, Hunnewell furnace, Greenup county. |
| 19 | White | do | From 600 tons at Hunnewell furnace; "block kidney." | Carbonate | 801 | Hanging Rock, Hunnewell furnace, Greenup county. |
| 20 | King | do | From "red lime" ore in bank | do | 814 | Hunnewell bank, Hunnewell furnace, Lawrence county. |
| 21 | do | do | From "gray lime" ore in same bank as No. 814 | do | 815 | do |
| 22 | do | do | From bowlders of kidney ore in same bank as Nos. 814 and 815. | do | 816 | do |
| 23 | White | do | From bank | do | 802 | S. S. Duzan's Iron Hills furnace, Carter county. |
| 24 | do | do | From upper line in kidney vein | do | 803 | Lambert banks, Iron Hills furnace, Carter county. |
| 25 | do | do | From main seam and two small seams above it | do | 804 | do |
| 26 | do | do | From concretionary bowlders in main seam of ore. | Limonite | 805 | do |
| 27 | do | do | From breast of ore in old workings | Carbonate | 806 | Iron Hills property, Carter county |
| 28 | do | do | From kidney ore in bank | Limonite | 807 | Stewart's bank, Robbin's Run, Carter county. |
| 29 | do | do | From "block ore" in same pit as No. 807 | Carbonate | 808 | do |
| 30 | do | do | From upper seam of "little block ore" | do | 809 | Robbin's Run, Mount Savage furnace, Carter county. |
| 31 | King | do | From lower seam of "little block ore" | do | 810 | do |
| 32 | do | do | From "gray lime" ore above coal No. 5 (wanting). | do | 811 | do |
| 33 | do | do | From stock pile at Mount Savage furnace, average output of numerous banks in neighborhood. | Carbonate, "kidney," and "block." | 812 | Mount Savage banks, Mount Savage furnace, Carter county. |
| 34 | do | do | From "red kidney" ore in bank | Limonite | 813 | Bay's Branch, Lost Creek, Carter county. |

MAINE.

| | | | | | | |
|---|---|---|---|---|---|---|
| 1 | Richmond | Benton | From piles of roasted ore at furnace | Limonite (roasted) | 676 | Katahdin Iron Works, Piscataquis county. |
| 2 | do | do | From pile of raw ore at furnace and from three excavations 1 mile west of furnace. | Limonite | 677 | do |
| 3 | do | do | From pit 1 mile west of furnace | do | 678 | do |

MARYLAND.

| | | | | | | |
|---|---|---|---|---|---|---|
| 1 | Richmond | Benton | At Stickney furnace, Baltimore | Carbonate (roasted) | 1022 | Hanover Switch, Hanover county |
| 2 | do | do | do | Carbonate | 1023 | do |
| 3 | do | do | At mine | Carbonate and altered products. | 1024 | Bowers' Spring (Garden, Baltimore, Baltimore county. |
| 4 | do | do | From two parallel stringers of nodules of ore at head of drift 40 feet from entrance. | do | 1029 | Jacob Smith's, near Baltimore, Baltimore county. |
| 5 | do | do | From several tons of nodules at mine | do | 1030 | Mrs. H. Smith's land, Baltimore county. |
| 6 | do | do | do | do | 1031 | Furstenburg, Stemmer's Run station, Baltimore county. |
| 7 | do | do | From pile of nodules at mine | do | 1032 | Reves & Coster, L. Furstenburg's land, Baltimore county. |
| 8 | do | do | Selected clippings of white unaltered carbonate ore in pile of 500 tons at Furstenburg's furnace. | do | 1033 | Furstenburg's furnace, Baltimore county. |
| 9 | do | do | Selected clippings of peroxidized ore in same pile. | do | 1034 | do |
| 10 | do | do | Average of same pile | do | 1035 | do |
| 11 | do | do | From 100 tons of roasted ore at Furstenburg's furnace. | Carbonate and altered products (roasted). | 1036 | do |
| 12 | do | do | From 20 tons of nodules at mine | Carbonate and altered products. | 1050 | Jacob Odensoss' land, near Baltimore, Baltimore county. |
| 13 | do | do | From 30 tons of nodules at mine | do | 1051 | Norris or Whittaker, near Baltimore, Baltimore county. |
| 14 | do | do | From the carbonate portion of 3,000 tons of ore at furnace. | do | 1052 | Stickney Iron Company's furnace, near Baltimore, Baltimore county. |
| 15 | do | do | From the peroxidized portion of same pile | do | 1053 | do |
| 16 | do | do | From furnace stock piles; ore from numerous mines in Baltimore county. | do | 1054 | Maryland or Ellicott's furnace, Baltimore, Baltimore county. |
| 17 | do | do | From stock piles of roasted ore from same mines. | Carbonate and altered products (roasted). | 1055 | do |
| 18 | do | do | From 10 tons of lump ore at mine | Limonite | 1056 | John Ridgeley's land, near Baltimore, Baltimore county. |
| 19 | do | do | From 50 tons of washed ore at washer | do | 1057 | Wood's, near Baltimore, Baltimore county. |
| 20 | do | do | From 40 tons of lump ore at mine | do | 1058 | Miss Talbot's land, near Baltimore, Baltimore county. |
| 21 | do | do | From 100 tons of washed ore at washer | do | 1059 | Kelly, near Baltimore, Baltimore county. |

TABLE 25.—*Partial analyses of iron ores*—Continued.

KENTUCKY—Continued.

| NATURAL ORE. | | | DRIED ORE. | | | P. ratio. | |
|---|---|---|---|---|---|---|---|
| P. | Fe. | Miscellaneous. | P. | Fe. | Miscellaneous. | | |
| *P. cent.* | *P. cent.* | | *P. cent.* | *P. cent.* | | *P. cent.* | |
| 0.107 | 54.39 | | 0.170 | 55.49 | | 0.306 | 11 |
| 0.227 | 32.02 | | 0.230 | 32.50 | | 0.709 | 12 |
| 0.423 | 32.27 | | 0.428 | 32.67 | | 1.311 | 13 |
| 0.513 | 32.01 | | 0.522 | 32.58 | | 1.603 | 14 |
| 0.139 | 31.49 | | 0.140 | 31.78 | | 0.441 | 15 |
| 0.698 | 54.65 | | 0.710 | 55.61 | | 1.278 | 16 |
| 0.173 | 51.10 | | 0.175 | 51.70 | | 0.339 | 17 |
| 0.099 | 34.96 | | 0.101 | 35.66 | | 0.283 | 18 |
| 0.341 | 36.18 | | 0.345 | 36.65 | | 0.943 | 19 |
| 0.126 | 40.61 | S 0.218 p. ct. Complete analysis | 0.128 | 40.85 | S 0.218 p. ct. | 0.313 | 20 |
| 0.141 | 32.46 | | 0.142 | 32.65 | | 0.434 | 21 |
| 0.294 | 39.52 | | 0.298 | 40.00 | | 0.744 | 22 |
| 0.224 | 37.32 | | 0.228 | 37.97 | | 0.600 | 23 |
| 0.260 | 35.36 | | 0.265 | 35.98 | | 0.735 | 24 |
| 2.479 | 34.82 | | 2.565 | 36.03 | | 7.119 | 25 |
| 0.737 | 40.48 | | 0.762 | 41.87 | | 1.821 | 26 |
| 2.510 | 34.55 | | 2.535 | 34.90 | | 7.265 | 27 |
| 0.187 | 31.20 | | 0.189 | 31.52 | | 0.599 | 28 |
| 0.170 | 35.63 | | 0.172 | 36.04 | | 0.477 | 29 |
| 0.215 | 37.32 | | 0.217 | 37.67 | | 0.576 | 30 |
| 0.279 | 34.77 | | 0.282 | 35.11 | | 0.774 | 31 |
| 0.927 | 27.73 | | 0.937 | 28.02 | | 3.343 | 32 |
| 0.223 | 41.30 | | 0.226 | 41.84 | | 0.540 | 33 |
| 0.079 | 22.81 | | 0.080 | 23.08 | | 0.346 | 34 |

MAINE.

| | | | | | | | |
|---|---|---|---|---|---|---|---|
| 0.012 | 57.20 | | 0.012 | 57.25 | | 0.021 | 1 |
| 0.009 | 46.00 | S 3.004 p. ct. Complete analysis | 0.009 | 47.88 | S 3.127 p. ct | 0.019 | 2 |
| 0.037 | 47.28 | | 0.039 | 49.06 | | 0.078 | 3 |

MARYLAND.

| | | | | | | | |
|---|---|---|---|---|---|---|---|
| 0.112 | 49.72 | | 0.112 | 49.72 | | 0.225 | 1 |
| 0.146 | 43.46 | | 0.148 | 44.11 | | 0.336 | 2 |
| 0.096 | 38.54 | | 0.096 | 38.66 | | 0.249 | 3 |
| 0.092 | 42.76 | | 0.093 | 43.24 | | 0.215 | 4 |
| 0.127 | 46.23 | | 0.129 | 46.97 | | 0.275 | 5 |
| 0.098 | 35.75 | | 0.099 | 35.97 | | 0.274 | 6 |
| 0.094 | 40.58 | | 0.096 | 41.27 | | 0.232 | 7 |
| 0.068 | 36.56 | | 0.068 | 36.67 | | 0.186 | 8 |
| 0.113 | 46.17 | | 0.116 | 47.28 | | 0.245 | 9 |
| 0.089 | 42.01 | | 0.090 | 42.69 | | 0.212 | 10 |
| 0.079 | 47.73 | | 0.080 | 48.35 | | 0.166 | 11 |
| 0.041 | 37.53 | | 0.041 | 37.67 | | 0.109 | 12 |
| 0.149 | 40.73 | | 0.151 | 41.31 | | 0.366 | 13 |
| 0.055 | 37.94 | | 0.055 | 38.10 | | 0.145 | 14 |
| 0.177 | 44.41 | | 0.182 | 45.69 | | 0.399 | 15 |
| 0.073 | 40.87 | | 0.074 | 41.41 | | 0.179 | 16 |
| 0.123 | 45.84 | | 0.124 | 46.05 | | 0.268 | 17 |
| 0.200 | 54.42 | | 0.203 | 55.20 | | 0.368 | 18 |
| 0.102 | 40.39 | | 0.104 | 41.01 | | 0.253 | 19 |
| 0.067 | 52.72 | | 0.068 | 53.40 | | 0.127 | 20 |
| 0.174 | 38.96 | | 0.176 | 39.47 | | 0.447 | 21 |

TABLE 25.—*Partial analyses of iron ores*—Continued.

MARYLAND—Continued.

| | Chemist. | Sampler. | Remarks. | Kind of ore. | Number. | Name and location of mine. |
|---|---|---|---|---|---|---|
| 22 | Richmond | Benton | From 40 tons of washed ore at washer | Limonite | 1060 | Oregon, near Ashland furnace, Baltimore county. |
| 23 | do | do | From 60 tons of lump ore at mine | do | 1061 | do |
| 24 | do | do | From 150 tons of washed ore at Stevenson's station. | do | 1062 | Green Spring, near Stevenson's station, Baltimore county. |
| 25 | do | do | From car-load of 20 tons at railroad | Carbonate and altered products. | 1037 | George L. Skagg's land, Branchville station, Prince George's county. |
| 26 | do | do | From 10 tons nodules at mine | do | 1038 | George Yokel's land, near Beltsville station, Prince George's county. |
| 27 | do | do | From 1,000 tons of ore at Muirkirk furnace | do | 1039 | Friel & Millbrook's, Smith's & Wood's mines, Prince George's county. |
| 28 | do | do | From piles of roasted ore at furnace | do | 1040 | do |
| 29 | do | do | From 5 tons of ore at furnace | do | 1041 | Friel & Millbrook's, near Muirkirk furnace, Prince George's county. |
| 30 | do | do | Selected clippings of white ore from same pile as No. 1039. | do | 1042 | do |
| 31 | do | do | From 70 tons of ore at mine and near railroad | do | 1043 | J. O'Brien's land, Contee's station, Prince George's county. |
| 32 | do | do | From 50 tons of ore at mine | do | 1044 | A. S. Linthicum's, near Jessup's station, Anne Arundel county. |
| 33 | do | do | From 20 tons of nodules from lowest 6 feet; unaltered carbonate. | do | 1045 | do |
| 34 | do | do | From 25 tons of nodules from dark gray plastic clay forming lower part of exposure. | do | 1046 | Howard Brown's land, Hanover station, Anne Arundel county. |
| 35 | do | do | From 25 tons nodules from light brown siliceous clay in upper part of exposure. | do | 1047 | do |
| 36 | do | do | From 60 tons nodules from dark gray plastic clay (bottom). | do | 1048 | do |
| 37 | do | do | From 40 tons nodules from brown plastic clay (top). | do | 1049 | do |
| 38 | do | do | From 5,000 tons of lump ore at Avondale station. | Limonite | 1063 | Avondale, Avondale station, Carroll county. |
| 39 | do | do | From 70 tons of ore near shaft | Magnetite | 1064 | Springfield, near Sykesville station, Carroll county. |
| 40 | do | do | Across 2-foot vein at bottom of shaft, 100 feet below surface. | do | 1065 | do |
| 41 | do | do | From 2,000 tons fine unwashed ore at mine | Limonite | 1066 | Ensor, James Scholl's land, Unionville, Frederick county. |
| 42 | do | do | From 150 tons lump ore at New Windsor, East station. | do | 1067 | do |
| 43 | do | do | From 25 tons of ore from 150-foot drift and small drifts near it. | do | 1068 | Catoctin or Kunkel, near Catoctin furnace, Frederick county. |
| 44 | do | do | From few tons of washed and screened ore at washer. | do | 1069 | do |
| 45 | do | do | From 50 tons lump ore at mine | do | 1070 | Grim's, near New Midway station, Frederick county. |
| 46 | do | do | From 75 tons screened ore at mine | do | 1071 | Thomas, near Frederick Junction, Frederick county. |
| 47 | do | do | From fragments of ore near mine entrance | do | 1075 | Bowery, near Borden shaft, Allegany county. |
| 48 | do | do | do | Fossil | 1076 | Frost, near Cumberland, Allegany county. |

MASSACHUSETTS.

| | | | | | | |
|---|---|---|---|---|---|---|
| 1 | Whitfield | Putnam | Mixed, washed, and rock ore from cars at mine | Limonite | 790 | Chauncey Leet (Hudson Iron Co.), West Stockbridge, Berkshire county. |
| 2 | do | do | From 100 tons washed ore at mine | do | 791 | Goodrich, West Stockbridge, Berkshire county. |
| 3 | do | do | From 30 tons rock ore at mine | do | 792 | do |
| 4 | do | do | From 50 tons washed ore at Richmond furnace | do | 793 | Nathaniel Leet (Richmond Iron Co.), West Stockbridge, Berkshire county. |
| 5 | do | do | From 1,000 tons washed ore at washer | do | 794 | Cone, Richmond, Berkshire county |
| 6 | do | do | From 2,000 tons rock and washed ore at Pomeroy furnace. | do | 795 | Bank, Richmond, Berkshire county |
| 7 | do | do | Rock ore from above pile at Pomeroy furnace | do | 796 | do |
| 8 | do | do | From 300 tons rock and washed ore at Pomeroy furnace. | do | 797 | Bacon, Richmond, Berkshire county |
| 9 | do | do | From 300 tons of rock ore at Pomeroy furnace | do | 798 | do |
| 10 | do | do | From 300 tons washed ore at mine | do | 799 | Cheever, Richmond, Berkshire county |
| 11 | do | do | From 25 tons rock ore at mine | do | 800 | do |

MINNESOTA.

| | | | | | | |
|---|---|---|---|---|---|---|
| 1 | King | Willis | From outcrop | Magnetite | 977 | Sec. 35, T. 54, R. 11 W., Lake county |
| 2 | do | do | do | Specular magnetite | 978 | Sec. 34, T. 56, R. 25 W., Itasca county |
| 3 | do | do | do | Specular | 979 | Sec. 32, T. 62, R. 15 W., Saint Louis county. |
| 4 | do | do | do | do | 980 | Pit 3, Sec. 32, T. 62, R. 15 W., Saint Louis county. |
| 5 | do | do | do | do | 981 | Pit 14, Sec. 28, T. 62, R. 15 W., Saint Louis county. |
| 6 | do | do | do | do | 982 | Pits 4 and 7, Sec. 27, T. 62, R. 15 W., Saint Louis county. |
| 7 | do | do | do | do | 983 | Pit 1, Sec. 27, T. 62, R. 15 W., Saint Louis county. |
| 8 | do | do | do | do | 984 | Pits 11 and 12, Sec. 27, T. 62, R. 15 W., Saint Louis county. |

TABLE 25.—*Partial analyses of iron ores*—Continued.

MARYLAND—Continued.

| NATURAL ORE. | | | DRIED ORE. | | | P. ratio. | |
|---|---|---|---|---|---|---|---|
| P. | Fe. | Miscellaneous. | P. | Fe. | Miscellaneous. | | |
| *P. cent.* | *P. cent.* | | *P. cent.* | *P. cent.* | | *P. cent.* | |
| 0.243 | 41.62 | | 0.249 | 42.59 | | 0.584 | 22 |
| 0.262 | 51.90 | | 0.266 | 52.61 | | 0.505 | 23 |
| 0.482 | 45.91 | | 0.486 | 46.93 | | 1.050 | 24 |
| 0.060 | 40.85 | | 0.061 | 41.64 | | 0.147 | 25 |
| 0.115 | 46.51 | | 0.118 | 47.66 | | 0.247 | 26 |
| 0.073 | 42.91 | | 0.074 | 43.60 | | 0.170 | 27 |
| 0.108 | 46.25 | | 0.108 | 46.36 | | 0.234 | 28 |
| 0.101 | 43.25 | | 0.103 | 44.25 | | 0.233 | 29 |
| 0.060 | 41.07 | | 0.060 | 41.32 | | 0.146 | 30 |
| 0.090 | 45.57 | | 0.093 | 46.98 | | 0.197 | 31 |
| 0.150 | 46.79 | | 0.155 | 48.32 | | 0.321 | 32 |
| 0.066 | 37.60 | | 0.066 | 37.80 | | 0.176 | 33 |
| 0.063 | 37.87 | | 0.063 | 38.03 | | 0.166 | 34 |
| 0.049 | 36.17 | | 0.049 | 36.33 | | 0.135 | 35 |
| 0.025 | 38.48 | | 0.025 | 38.68 | | 0.065 | 36 |
| 0.040 | 36.10 | | 0.040 | 36.26 | | 0.111 | 37 |
| 0.987 | 48.50 | | 0.997 | 48.98 | | 2.035 | 38 |
| 0.243 | 64.44 | | 0.243 | 64.47 | | 0.377 | 39 |
| 0.251 | 64.85 | | 0.251 | 64.88 | | 0.387 | 40 |
| 0.665 | 41.41 | | 0.669 | 41.65 | | 1.606 | 41 |
| 0.817 | 49.52 | | 0.821 | 49.77 | | 1.650 | 42 |
| 0.220 | 40.05 | | 0.225 | 40.93 | | 0.549 | 43 |
| 0.188 | 41.55 | | 0.193 | 42.63 | | 0.452 | 44 |
| 1.363 | 38.35 | | 1.396 | 39.27 | | 3.550 | 45 |
| 0.752 | 30.45 | | 0.760 | 30.77 | | 2.470 | 46 |
| 0.188 | 44.68 | | 0.192 | 45.57 | | 0.421 | 47 |
| 0.217 | 46.59 | | 0.220 | 47.38 | | 0.466 | 48 |

MASSACHUSETTS.

| | | | | | | | |
|---|---|---|---|---|---|---|---|
| 0.187 | 47.52 | | 0.189 | 47.90 | | 0.394 | 1 |
| 0.142 | 40.71 | | 0.144 | 41.17 | | 0.349 | 2 |
| 0.124 | 46.87 | | 0.125 | 47.36 | | 0.265 | 3 |
| 0.174 | 46.65 | | 0.175 | 47.00 | | 0.373 | 4 |
| 0.102 | 41.80 | | 0.103 | 42.04 | | 0.244 | 5 |
| 0.248 | 39.12 | | 0.250 | 39.41 | | 0.634 | 6 |
| 0.183 | 50.48 | | 0.184 | 50.79 | | 0.363 | 7 |
| 0.999 | 43.17 | | 1.007 | 43.51 | | 2.314 | 8 |
| 1.249 | 49.83 | | 1.263 | 50.38 | | 2.507 | 9 |
| 0.168 | 45.82 | | 0.169 | 46.14 | | 0.367 | 10 |
| 0.234 | 43.82 | | 0.236 | 44.29 | | 0.534 | 11 |

MINNESOTA.

| | | | | | | | |
|---|---|---|---|---|---|---|---|
| 0.027 | 51.71 | Mn. absent; $TiO_2$ present | 0.027 | 51.73 | Mn. absent; $TiO_2$ present | 0.052 | 1 |
| 0.012 | 50.04 | $TiO_2$ absent | 0.012 | 51.06 | $TiO_2$ absent | 0.024 | 2 |
| 0.044 | 66.46 | | 0.044 | 66.51 | | 0.066 | 3 |
| 0.044 | 65.89 | | 0.044 | 65.96 | | 0.067 | 4 |
| 0.056 | 68.05 | | 0.056 | 68.11 | | 0.082 | 5 |
| 0.035 | 64.55 | | 0.035 | 64.58 | | 0.054 | 6 |
| 0.059 | 67.28 | | 0.059 | 67.30 | | 0.088 | 7 |
| 0.067 | 65.73 | | 0.067 | 65.77 | | 0.103 | 8 |

TABLE 25.—*Partial analyses of iron ores*—Continued.

MISSOURI.

| | Chemist. | Sampler. | Remarks. | Kind of ore. | Number. | Name and location of mine. |
|---|---|---|---|---|---|---|
| 1 | King | Chauvenet | From 40 tons at Missouri furnace | Hematite | 534 | Staunton bank, Sec. 36, T. 41, R. 2 W., Franklin county. |
| 2 | White | do | From 300 tons at Staunton, from whole body of pit. | do | 581 | Staunton bank, Staunton, Franklin county. |
| 3 | do | do | From 100 tons on dump | do | 579 | Saint Clair bank, Sec. 28, T. 42, R. 1 W., Franklin county. |
| 4 | do | do | From whole working face of mine | do | 580 | do |
| 5 | King | do | From stock pile at Missouri Furnace Company, Saint Louis. | Specular | 535 | Cherry valley, Sec. 4, T. 37, R. 3 W., Crawford county |
| 6 | do | do | From all parts of bottom of pits No. 1 and 10 feet up side. | Blue specular | 550 | do |
| 7 | do | do | From broken ore and working face | Specular and hematite. | 551 | do |
| 8 | do | do | From working faces of 2 adjoining pits | do | 547 | Railroad bank, Sec. 14, T. 38, R. 4 W., Crawford county. |
| 9 | do | do | From bottom of pit | do | 548 | Zane bank, Sec. 13, T. 38, R. 4 W., Crawford county. |
| 10 | do | do | From a few tons of ore at mine | Hematite | 549 | Clark bank, Sec. 26, T. 38, R. 4 W., Crawford county. |
| 11 | do | do | From greatest depth on dip | do | 575 | Iron Ridge, Sec. 29, T. 39, R. 5 W., Crawford county. |
| 12 | do | do | From face and from bottom of shaft | do | 576 | Marsh bank, Sec. 5, T. 37, R. 5 W., Crawford county. |
| 13 | White | do | From small remnant of ore in pit | Blue specular and hematite. | 577 | Scotia, Sec. 28, T. 39, R. 2 W., Crawford county. |
| 14 | do | do | From 65 tons on dump | Hematite | 578 | McGarvey bank, near Leasburg, Crawford county. |
| 15 | King | do | From stock pile at stockhouse of Missouri Furnace Company, Saint Louis. | Hematite and specular. | 536 | Missouri furnace, Saint Louis, Saint Louis county. |
| 16 | Whitfield | do | From west cut | Specular | 537 | Shepherd Mountain, Sec. 31, T. 34, R. 4 E., Iron county. |
| 17 | White | do | From lower tunnel | do | 538 | Pilot Knob., Sec. 29, T. 34, R. 4 E., Iron county. |
| 18 | do | do | From upper tunnel on driving face | do | 539 | do |
| 19 | do | do | On northeast outcrop above slate seam | do | 540 | do |
| 20 | do | do | From right-hand wall of entrance to cut | do | 541 | Cedar Hill, Sec. 30, T. 34, R. 4 E., Iron county. |
| 21 | King | do | From whole east wall of pit | Hematite "paint ore". | 553 | Clinton, Sec. 26, T. 36, R. 6 W., Phelps county. |
| 22 | do | do | From stock pile from recently opened bank | Hematite | 554 | Stimson bank, Sec. 10, T. 36 R. 6 W., Phelps county. |
| 23 | do | do | From pit 20 feet deep | Blue specular | 556 | Lamb bank, Sec. 35, T. 36, R. 6 W., Phelps county. |
| 24 | do | do | From west working face | Hematite | 557 | Smith No. 3 (or Brady), Sec. 26, T. 36, R. 6 W., Phelps county. |
| 25 | do | do | From stock pile of 10 tons at Maramec furnace. | Blue specular and hematite "softpaint". | 570 | Maramec, Sec. 1, T. 37, R. 6 W., Phelps county. |
| 26 | do | do | From face of driving ditch | Hematite | 571 | Horse Hollow, Sec. 1, T. 35, R. 9 W., Phelps county. |
| 27 | do | do | From ore in new pit | Hematite and specular. | 572 | Ozark, Sec. 3, T. 35, R. 9 W., Phelps county. |
| 28 | do | do | From new pit | Hematite | 573 | Reed bank, Sec. 31, T. 37, R. 6 W., Phelps county. |
| 29 | do | do | From stock pile of 200 tons at mine | do | 574 | Moselle (or Cold Spring), Sec. 26, T. 36, R. 8 W., Phelps county. |
| 30 | White | do | From cars; rejected by Vulcan Steel Company. | Specular, with copper. | 582 | Grand Union, Sec. 31, T. 37, R. 6 W., Phelps county. |
| 31 | King | do | From special lot of best No. 1 ore in stock pile | Specular | 542 | Iron Mountain, Sec. 31, T. 35, R. 4 E., Saint François county. |
| 32 | do | do | From 200 tons second-class ore from all parts of third level. | do | 543 | do |
| 33 | do | do | From 40 tons of washed ore at washer | do | 544 | do |
| 34 | do | do | From 100 tons washed ore at washer | do | 545 | do |
| 35 | do | do | From choice pile of No. 1 ore on lowest level of west cut. | do | 546 | do |
| 36 | do | do | From 1,000 tons at Smith's switch | Hematite and specular. | 552 | Hawkins, Sec. 13, T. 35, R. 6 W., Dent county. |
| 37 | do | do | From pile of ore at bank | Hematite | 555 | Watkins, Sec. 12, T. 35, R. 7 W., Dent county. |
| 38 | do | do | Sample from whole output | Hematite, with jasper. | 558 | Pomeroy, Sec. 10, T. 34, R. 6 W., Dent county. |
| 39 | do | do | From whole bottom of pit | Hematite | 559 | Thomas bank, Sec 20, T. 34, R. 6 W., Dent county. |
| 40 | do | do | From 100 tons on cars at dump; ore from southwest side of deepest level. | Hematite and blue specular. | 560 | Simmons bank, Sec. 24, T. 34, R. 6 W., Dent county. |
| 41 | do | do | From all parts of pit | do | 561 | Milsap & Orchard, Sec. 18, T. 34, R. 5 W., Dent county. |
| 42 | White | do | From 20 tons of washed ore at bank | Hematite and specular. | 562 | Milsap, Sec. 18, T. 34, R. 5 W., Dent county. |
| 43 | do | do | From pile at top of shaft 80 feet deep | Specular | 563 | Nova Scotia, Sec. 26, T. 33, R. 4 W., Dent county. |
| 44 | do | do | From No. 8 prospecting shaft | Blue specular | 564 | do |
| 45 | do | do | From 300 tons of ore from main part of pit | do | 565 | Riverside bank, Sec. 2, T. 33, R. 5 W., Dent county. |
| 46 | do | do | From face of ore | Hematite | 566 | do |
| 47 | King | do | do | Specular and soft "paint". | 567 | Sligo, Sec. 2, T. 35, R. 4 W., Dent county. |
| 48 | do | do | do | Hematite and "paint". | 568 | do |
| 49 | do | do | From stock pile at Sligo furnace | Blue specular | 569 | Fitzwater, Secs. 33 and 34, T. 35, R. 4 W., Dent county. |

TABLE 25.—*Partial analyses of iron ores*—Continued.

MISSOURI.

| NATURAL ORE. | | | DRIED ORE. | | | P. ratio. | |
|---|---|---|---|---|---|---|---|
| P. | Fe. | Miscellaneous. | P. | Fe. | Miscellaneous. | | |
| *P. cent.* | *P. cent.* | | *P. cent.* | *P. cent.* | | *P. cent.* | |
| 0.072 | 57.85 | | 0.072 | 58.20 | | 0.124 | 1 |
| 0.058 | 58.81 | | 0.059 | 59.34 | | 0.099 | 2 |
| 0.059 | 62.40 | | 0.060 | 62.97 | | 0.095 | 3 |
| 0.058 | 58.86 | | 0.058 | 59.16 | | 0.099 | 4 |
| 0.082 | 57.18 | | 0.082 | 57.48 | | 0.143 | 5 |
| 0.022 | 65.87 | S 0.159 p. ct. Complete analysis | 0.022 | 65.96 | S 0.159 p. ct | 0.033 | 6 |
| 0.085 | 58.59 | | 0.086 | 59.00 | | 0.145 | 7 |
| 0.085 | 59.41 | | 0.086 | 59.91 | | 0.143 | 8 |
| 0.080 | 59.20 | | 0.081 | 59.74 | | 0.135 | 9 |
| 0.075 | 55.37 | | 0.076 | 56.30 | | 0.135 | 10 |
| 0.124 | 61.36 | | 0.125 | 61.84 | | 0.202 | 11 |
| 0.058 | 58.07 | | 0.059 | 58.71 | | 0.100 | 12 |
| 0.063 | 63.10 | | 0.063 | 63.37 | | 0.091 | 13 |
| 0.056 | 61.42 | | 0.056 | 61.74 | | 0.115 | 14 |
| 0.065 | 56.43 | | 0.065 | 56.78 | | 0.115 | 15 |
| 0.013 | 65.39 | S 0.077 p. ct. Complete analysis | 0.013 | 65.63 | S 0.077 p. ct | 0.020 | 16 |
| 0.005 | 59.59 | S 0.080 p. ct. Complete analysis | 0.005 | 59.52 | S 0.080 p. ct | 0.008 | 17 |
| 0.018 | 52.60 | S 0.492 p. ct. Complete analysis | 0.018 | 52.60 | S 0.490 p. ct | 0.034 | 18 |
| 0.025 | 50.40 | | 0.025 | 50.42 | | 0.050 | 19 |
| 0.006 | 66.61 | | 0.006 | 66.66 | | 0.009 | 20 |
| 0.048 | 63.13 | | 0.048 | 63.29 | | 0.076 | 21 |
| 0.017 | 54.90 | | 0.017 | 55.26 | | 0.031 | 22 |
| 0.022 | 63.38 | | 0.022 | 63.44 | | 0.035 | 23 |
| 0.026 | 62.66 | | 0.026 | 63.04 | | 0.041 | 24 |
| 0.050 | 63.28 | | 0.050 | 63.52 | | 0.079 | 25 |
| 0.032 | 55.73 | | 0.032 | 56.17 | | 0.057 | 26 |
| 0.042 | 45.76 | | 0.042 | 46.20 | | 0.092 | 27 |
| 0.121 | 54.76 | Cu. 2.455 p. ct | 0.123 | 55.86 | Cu. 2.455 p. ct | 0.221 | 28 |
| 0.074 | 55.21 | | 0.075 | 55.94 | | 0.134 | 29 |
| 0.027 | 31.62 | Cu. 21.60 p. ct | 0.027 | 31.67 | | 0.085 | 30 |
| 0.071 | 66.93 | | 0.071 | 66.97 | | 0.106 | 31 |
| 0.398 | 59.06 | | 0.399 | 59.36 | | 0.674 | 32 |
| 0.032 | 65.57 | | 0.032 | 65.71 | | 0.049 | 33 |
| 0.019 | 64.67 | | 0.019 | 64.78 | | 0.029 | 34 |
| 0.005 | 62.84 | | 0.005 | 62.92 | | 0.008 | 35 |
| 0.040 | 56.19 | | 0.040 | 56.79 | | 0.071 | 36 |
| 0.070 | 59.30 | S 0.069 p. ct | 0.070 | 59.98 | S 0.070 p. ct | 0.118 | 37 |
| 0.079 | 59.99 | | 0.080 | 60.62 | | 0.132 | 38 |
| 0.127 | 57.78 | | 0.128 | 58.32 | | 0.220 | 39 |
| 0.039 | 61.97 | | 0.039 | 62.22 | | 0.063 | 40 |
| 0.067 | 57.96 | | 0.067 | 58.29 | | 0.116 | 41 |
| 0.040 | 60.39 | | 0.040 | 60.64 | | 0.066 | 42 |
| 0.061 | 63.77 | | 0.061 | 64.15 | | 0.096 | 43 |
| 0.025 | 67.02 | | 0.025 | 67.10 | | 0.037 | 44 |
| 0.020 | 63.90 | S 0.020 p. ct. Complete analysis | 0.020 | 63.90 | S 0.020 p. ct | 0.045 | 45 |
| 0.063 | 64.05 | S 0.170 p. ct. Complete analysis | 0.063 | 64.31 | S 0.180 p. ct | 0.098 | 46 |
| 0.040 | 65.92 | | 0.040 | 66.14 | | 0.061 | 47 |
| 0.026 | 65.03 | | 0.026 | 65.16 | | 0.040 | 48 |
| 0.035 | 62.95 | | 0.035 | 62.95 | | 0.056 | 49 |

**TABLE 25.**—*Partial analyses of iron ores*—Continued.

NEVADA.

| | Chemist. | Sampler. | Remarks. | Kind of ore. | Number. | Name and location of mine. |
|---|---|---|---|---|---|---|
| 1 | King | Putnam | One lump of ore | Magnetite | 1164 | Jackson mountains, Humboldt county. |

NEW HAMPSHIRE.

| | | | | | | |
|---|---|---|---|---|---|---|
| 1 | Richmond | Benton | From stock pile at furnace | Magnetite | 679 | Franconia furnace, near Littleton, Grafton county. |

NEW JERSEY.

| | | | | | | |
|---|---|---|---|---|---|---|
| 1 | Blair | Putnam | Across stope, 75 feet east of bottom of shaft | Magnetite | 90 | Washington, Oxford, Warren county |
| 2 | do | do | East of bottom of shaft, 250 feet below surface | do | 91 | New mine (Carwheel vein), Oxford, Warren county. |
| 3 | do | do | 100 feet east of shaft, 250 feet below surface | do | 92 | New mine (Gray vein), Oxford, Warren county. |
| 4 | do | do | From 75 tons at Oxford furnace | do | 93 | Washington, Oxford, Warren county |
| 5 | do | do | From 100 tons at Oxford furnace | do | 94 | Welch, Oxford, Warren county |
| 6 | Chauvenet | do | Average of one week's output | do | 329 | do |
| 7 | do | do | do | do | 330 | New, Oxford, Warren county |
| 8 | Blair | do | From 75 tons at Oxford furnace | do | 95 | New (Gray and Carwheel veins), Oxford, Warren county. |
| 9 | do | do | From stock pile of 200 tons at mine | do | 96 | Kishpaugh, Hope, Warren county |
| 10 | do | do | From stock pile of 100 tons at mine | do | 97 | do |
| 11 | do | do | From about 75 tons at mine | do | 99 | Bald Pate, Mansfield, Warren county |
| 12 | do | do | From 100 tons near top of southwest shaft | do | 100 | Egbert, Mansfield, Warren county |
| 13 | do | do | From 25 tons at Stanhope furnace | Limonite | 325 | Shields, Beattyestown hematite, Mansfield, Warren county. |
| 14 | do | do | Across stope in main pit | Magnetite | 301 | Andover, Andover, Sussex county |
| 15 | do | do | From 80 tons of sorted ore on dock | do | 302 | do |
| 16 | do | do | From small vein, or stringers, on side of pit | Hematite (decomposed magnetite?) | 303 | do |
| 17 | do | do | From small opening east of north end of old mine | Magnetite (lodestone). | 304 | do |
| 18 | do | do | From near north end of old mine in old pillar | Specular hematite, black hematite. | 305 | do |
| 19 | do | do | In small pit west of old mine | Mixed hematite and magnetite. | 306 | do |
| 20 | Chauvenet | do | From about 100 tons at kilns | Magnetite (roasted) | 347 | do |
| 21 | Blair | do | From about 1,000 tons at mine | Magnetite | 307 | Hill, Franklin furnace, Hardyston, Sussex county. |
| 22 | do | do | From 150 tons at Franklin furnace | do | 308 | Pike's Peak, or Furnace vein, Hardyston, Sussex county. |
| 23 | do | do | From 75 tons at Franklin furnace | Limonite | 309 | Pochunk, Franklin furnace, Vernon, Sussex county. |
| 24 | Chauvenet | do | From 350 tons at Franklin furnace | Magnetite | 310 | Canistear, Franklin furnace, Hardyston, Sussex county. |
| 25 | Blair | do | From 2,500 tons at mine | do | 311 | Pardee (Ogden mines), Sparta, Sussex county. |
| 26 | Chauvenet | do | From west stope in mine | do | 312 | Roberts (Ogden mines), Sparta, Sussex county. |
| 27 | do | do | From east stope in mine | do | 313 | do |
| 28 | do | do | From 200 tons on railroad dock | do | 314 | Davenport (Ogden mines), Sparta, Sussex county. |
| 29 | do | do | From 50 tons at mine | do | 319 | Sickles, Sparta, Sussex county |
| 30 | do | do | do | do | 320 | Roseville, Byram, Sussex county |
| 31 | do | do | From 25 tons from opening on southwest side of hill. | do | 321 | Hude, or Stanhope, Byram, Sussex county. |
| 32 | do | do | From 500 tons at Stanhope furnace | do | 322 | do |
| 33 | do | do | From drift in mine | do | 323 | Wright, Byram, Sussex county |
| 34 | do | do | From few tons at top of northeast shaft | do | 324 | do |
| 35 | Whitfield | do | From 3 cars of ore at dump | do | 395 | Cannon (Ringwood mines), Pompton, Passaic county. |
| 36 | do | do | From 4 cars of ore at dump | do | 396 | Peter's (Ringwood mines), Pompton, Passaic county. |
| 37 | do | do | From 150 tons at mine | do | 397 | Hope (new opening), Pompton, Passaic county. |
| 38 | do | do | From 100 tons near opening | do | 398 | Hope (old opening), Pompton, Passaic county. |
| 39 | do | do | From 10 cars of ore at dump | Magnetite (partly weathered.) | 399 | Hewitt, Pompton, Passaic county |
| 40 | Chauvenet | do | From stock pile of 6,000 tons at mine | Magnetite | 315 | Ford mine, Jefferson, Morris county |
| 41 | do | do | From 4 cars (about 25 tons), ready for shipment | do | 316 | Dodge, Jefferson, Morris county |
| 42 | do | do | From 300 tons at mine | do | 317 | Weldon, Jefferson, Morris county |
| 43 | Blair | do | From about 110 tons on cars at mine | do | 318 | Hurd, or Hurdtown, Jefferson, Morris county. |
| 44 | Chauvenet | do | From 600 tons at mine | Magnetite ("Blue ore") | 326 | Mount Olive, Mount Olive, Morris county. |
| 45 | do | do | From 75 tons at mine; "red" ore from new shaft. | Magnetite (decomposed). | 327 | do |
| 46 | do | do | From 50 tons at mine; "red ore" | Magnetite | 328 | Stoutenburgh, Washington, Morris county. |
| 47 | do | do | From 400 tons from Wiggins' open cut, southwest hill. | do | 336 | Hackelbarney, Chester, Morris county |
| 48 | do | do | From 336 tons from Jones' cut, southwest hill | do | 337 | do |
| 49 | do | do | From 100 tons, Wiggins' shaft, southwest hill | do | 338 | do |

TABLE 25.—*Partial analyses of iron ores*—Continued.

NEVADA.

| Natural ore. P. | Natural ore. Fe. | Natural ore. Miscellaneous. | Dried ore. P. | Dried ore. Fe. | Dried ore. Miscellaneous. | P. ratio. | |
|---|---|---|---|---|---|---|---|
| *P. cent.* | *P. cent.* | | *P. cent.* | *P. cent.* | | *P. cent.* | |
| 0.320 | 66.75 | ..... | 0.321 | 66.87 | ..... | 0.470 | 1 |

NEW HAMPSHIRE.

| | | | | | | | |
|---|---|---|---|---|---|---|---|
| 0.188 | 49.01 | ..... | 0.188 | 49.01 | ..... | 0.384 | 1 |

NEW JERSEY.

| | | | | | | | |
|---|---|---|---|---|---|---|---|
| 0.505 | 57.43 | S 0.620 p. ct.; Mn. present; $TiO_2$ present; specific gravity, 4.383. | 0.507 | 57.60 | S 0.622 p. ct.; Mn. present; $TiO_2$ present | 0.879 | 1 |
| 0.151 | 54.84 | S 0.225 p. ct.; Mn. present; $TiO_2$ present; specific gravity, 4.429. | 0.151 | 54.86 | S 0.225 p. ct.; Mn. present; $TiO_2$ present | 0.275 | 2 |
| 0.044 | 39.54 | S 0.758 p. ct.; Mn. present; $TiO_2$ present; specific gravity, 3.998. | 0.044 | 39.54 | S 0.758 p. ct.; Mn. present; $TiO_2$ present | 0.111 | 3 |
| 0.657 | 61.36 | S 0.609 p. ct.; Mn. present; $TiO_2$ present | 0.657 | 61.38 | S 0.609 p. ct.; Mn. present; $TiO_2$ present | 1.070 | 4 |
| 0.077 | 46.59 | S 0.342 p. ct.; Mn. present; $TiO_2$ present; specific gravity, 4.172. | 0.077 | 46.61 | S 0.342 p. ct.; Mn. present; $TiO_2$ present | 0.105 | 5 |
| 0.059 | 41.60 | S 0.585 p. ct.; specific gravity, 3.999 | 0.059 | 41.66 | S 0.586 p. ct | 0.142 | 6 |
| 0.095 | 46.66 | S 0.270 p. ct.; Mn. present; specific gravity, 4.126 | 0.095 | 46.66 | S 0.270 p. ct.; Mn. present | 0.204 | 7 |
| 0.072 | 43.31 | S 0.307 p. ct.; Mn. present; $TiO_2$ present; specific gravity, 4.084. | 0.072 | 43.37 | S 0.307 p. ct.; Mn. present; $TiO_2$ present | 0.166 | 8 |
| 0.036 | 49.68 | S 0.755 p. ct.; Mn. present; $TiO_2$ present; specific gravity, 3.898. | 0.036 | 50.26 | S 0.764 p. ct.; Mn. present; $TiO_2$ present | 0.072 | 9 |
| 0.036 | 54.71 | S 0.542 p. ct.; Mn. present; $TiO_2$ present; specific gravity, 4.069. | 0.036 | 54.92 | S 0.544 p. ct.; Mn. present; $TiO_2$ present | 0.066 | 10 |
| *0.039 | 54.10 | S 0.025 p. ct | 0.039 | 54.34 | S 0.025 p. ct | 0.072 | 11 |
| 0.418 | 47.37 | S 4.010 p. ct | 0.418 | 47.41 | S 4.013 p. ct | 0.882 | 12 |
| 0.257 | 42.73 | S 0.041 p. ct.; specific gravity, 3.494. Complete analysis. | 0.258 | 42.96 | S 0.041 p. ct | 0.601 | 13 |
| 0.024 | 42.63 | S 2.290 p. ct.; specific gravity, 4.178 | 0.024 | 42.66 | S 2.291 p. ct | 0.056 | 14 |
| 0.022 | 36.91 | S 2.527 p. ct.; specific gravity, 4.086. Complete analysis. | 0.022 | 36.95 | S 2.530 p. ct | 0.060 | 15 |
| 0.100 | 32.73 | S 0.270 p. ct | 0.101 | 33.22 | S 0.274 p. ct | 0.306 | 16 |
| 0.001 | 62.31 | S 0.059 p. ct | 0.001 | 62.53 | S 0.059 p. ct | 0.002 | 17 |
| 0.018 | 63.62 | S 0.057 p. ct | 0.018 | 63.77 | S 0.057 p. ct | 0.028 | 18 |
| 0.110 | 41.66 | S 0.071 p. ct.; specific gravity, 3.576 | 0.111 | 41.80 | S 0.072 p. ct | 0.265 | 19 |
| 0.020 | 46.53 | S 0.786 p. ct.; specific gravity, 4.187 | 0.786 | 46.57 | S 0.787 p. ct | 0.043 | *20 |
| 0.045 | 27.88 | S 0.267 p. ct.; specific gravity, 3.684 | 0.045 | 27.88 | S 0.267 p. ct | 0.161 | 21 |
| 0.033 | 33.15 | S 0.439 p. ct.; specific gravity, 3.576. Complete analysis. | 0.033 | 33.17 | S 0.439 p. ct | 0.099 | 22 |
| 0.562 | 38.60 | S 0.132 p. ct.; specific gravity, 3.162 | 0.575 | 39.51 | S 0.135 p. ct | 1.456 | 23 |
| 0.084 | 35.38 | S 0.042 p. ct.; specific gravity, 3.440 | 0.084 | 35.44 | S 0.044 p. ct | 0.237 | 24 |
| 1.067 | 59.23 | S 0.113 p. ct. Complete analysis | 1.067 | 59.28 | S 0.113 p. ct | 1.801 | 25 |
| 0.613 | 63.91 | S 0.133 p. ct.; specific gravity, 4.674 | 0.613 | 63.92 | S 0.133 p. ct | 0.959 | 26 |
| 0.746 | 64.22 | S 0.105 p. ct.; specific gravity, 4.795 | 0.746 | 64.25 | S 0.105 p. ct | 1.162 | 27 |
| 0.398 | 47.76 | S 0.208 p. ct.; specific gravity, 4.031 | 0.398 | 47.78 | S 0.208 p. ct | 0.833 | 28 |
| 0.050 | 38.11 | S 0.976 p. ct.; specific gravity, 4.361 | 0.050 | 38.24 | S 0.979 p. ct | 0.191 | 29 |
| 0.035 | 53.92 | S 0.013 p. ct.; specific gravity, 3.906 | 0.035 | 54.04 | S 0.013 p. ct | 0.065 | 30 |
| 0.037 | 49.95 | S 0.178 p. ct.; specific gravity, 3.975 | 0.037 | 50.36 | S 0.179 p. ct | 0.074 | 31 |
| 0.057 | 50.23 | S 1.220 p. ct.; specific gravity, 4.048 | 0.057 | 50.52 | S 1.227 p. ct | 0.113 | 32 |
| 0.342 | 49.88 | S 1.382 p. ct | 0.345 | 50.33 | S 1.395 p. ct | 0.686 | 33 |
| 0.521 | 47.62 | S 2.824 p. ct.; specific gravity, 4.181 | 0.522 | 47.74 | S 2.831 p. ct | 1.094 | 34 |
| 1.567 | 55.25 | Specific gravity, 4.545 | 1.570 | 55.57 | ..... | 2.818 | 35 |
| 1.556 | 55.56 | ..... | 1.560 | 55.67 | ..... | 2.801 | 36 |
| 0.458 | 62.66 | Specific gravity, 4.802 | 0.459 | 62.75 | ..... | 0.731 | 37 |
| 0.448 | 63.20 | Specific gravity, 4.818 | 0.449 | 63.33 | ..... | 0.769 | 38 |
| 0.078 | 52.32 | S 3.324 p. ct.; Cr. present; specific gravity, 4.814 | 0.078 | 52.68 | S 3.347 p. ct | 0.149 | 39 |
| 0.313 | 50.70 | S 0.753 p. ct.; specific gravity, 4.152 | 0.313 | 50.72 | S 0.753 p. ct | 0.617 | 40 |
| 0.168 | 50.70 | S 0.443 p. ct.; specific gravity, 4.149 | 0.168 | 50.73 | S 0.443 p. ct | 0.331 | 41 |
| *0.554 | 54.80 | S 0.266 p. ct.; Mn. present; $TiO_2$ present; specific gravity, 4.327. | *0.554 | 54.81 | S 0.266 p. ct.; Mn. present; $TiO_2$ present | 1.010 | 42 |
| 0.169 | 66.02 | S 0.096 p. ct. Complete analysis | 0.169 | 66.05 | S 0.096 p. ct | 0.256 | 43 |
| 0.182 | 58.92 | S 1.960 p. ct.; specific gravity, 4.421 | 0.183 | 59.19 | S 1.969 p. ct | 0.309 | 44 |
| 0.090 | 63.36 | S 0.145 p. ct | 0.090 | 63.39 | S 0.145 p. ct | 0.142 | 45 |
| 0.639 | 56.37 | S 0.155 p. ct.; specific gravity, 4.298 | 0.639 | 56.80 | S 0.156 p. ct | 1.194 | 46 |
| 0.098 | 47.21 | S 3.290 p. ct | 0.098 | 47.26 | S 3.293 p. ct | 0.207 | 47, 48, 49 |

* Whitfield.

TABLE 25.—*Partial analyses of iron ores*—Continued.

NEW JERSEY—Continued.

| | Chemist. | Sampler. | Remarks. | Kind of ore. | Number. | Name and location of mine. |
|---|---|---|---|---|---|---|
| 50 | Chauvenet | Putnam | From 75 tons from coal-house vein | Magnetite | 339 | Hackelbarney, Chester, Morris county. |
| 51 | do | do | From 300 tons from Andrew's open cut | do | 340 | do |
| 52 | do | do | From 75 tons from East cut | do | 341 | do |
| 53 | do | do | From 1 car of ore from Tunnel vein | do | 342 | do |
| 54 | do | do | From 400 tons from George vein | do | 343 | do |
| 55 | do | do | From ca. 400 tons at Andrew's shaft, Foley vein | do | 344 | do |
| 56 | do | do | From ca. 20 tons from washer; coal-house vein | Magnetite (decomposed). | 345 | do |
| 57 | do | do | From ca. 27 tons at shaft from washer | do | 346 | Pitney, Chester, Morris county |
| 58 | do | do | From ca. 75 tons at mine | do | 348 | Taylor's Opening, near Chester Station, Morris county. |
| 59 | do | do | From ca. 1,000 tons at mine | Magnetite | 349 | Samson (or Skellenger), Chester, Morris county. |
| 60 | Whitfield | do | From pile of few tons from washer | Magnetite (decomposed). | 350 | Cooper, Chester, Morris county |
| 61 | do | do | From ca. 1,000 tons at mine | Magnetite | 351 | Styles, Randolph, Morris county |
| 62 | do | do | From a few tons at top of shaft No. 1 (southwest shaft). | do | 352 | Bryant, Randolph, Morris county |
| 63 | do | do | From ca. 20 tons at top of shaft No. 2 | do | 353 | do |
| 64 | do | do | From ca. 20 tons at top of shaft | do | 354 | De Hart, Randolph, Morris county |
| 65 | do | do | From ca. 10 tons from shaft No. 1 | do | 355 | Lawrence, Randolph, Morris county |
| 66 | do | do | From ca. 20 tons from shaft No. 9 | do | 356 | Dalrymple, Randolph, Morris county |
| 67 | do | do | From ca. 20 tons from pit No. 5 | do | 357 | do |
| 68 | do | do | From cars at McCainsville | do | 358 | Evers, Randolph, Morris county |
| 69 | do | do | do | do | 359 | Brotherton, Randolph, Morris county |
| 70 | do | do | From shaft No. 7; on cars, ready for shipment | do | 360 | Byram, Randolph, Morris county |
| 71 | do | do | From shaft No. 12; on cars, ready for shipment | do | 361 | do |
| 72 | do | do | From shaft No. 6; on cars, ready for shipment | do | 362 | do |
| 73 | do | do | From lumps of ore at top of shaft, and on cars | do | 363 | do |
| 74 | do | do | From ca. 25 tons at top of shaft; from pillar in old mine. | do | 364 | do |
| 75 | do | do | From cars at Dover | do | 365 | Millon, Randolph, Morris county |
| 76 | do | do | From cars at McCainsville | do | 366 | Randall Hill, Randolph, Morris county |
| 77 | do | do | From ca. 25 tons on dock; from sink, pit No. 11 | do | 367 | Dickerson, Randolph, Morris county |
| 78 | do | do | From ca. 20 tons on dock; from stope in main chutes, pit. No. 2. | do | 368 | do |
| 79 | do | do | From ca 20 tons on dock; from side vein | do | 369 | do |
| 80 | do | do | From cars at McCainsville | do | 370 | Baker, Randolph, Morris county |
| 81 | do | do | From ca. 60 tons on cars at Port Oram | do | 371 | Stirling, Randolph, Morris county |
| 82 | do | do | From ca. 50 tons on cars at mine | Magnetite (partly decomposed). | 372 | Hurd, Randolph, Morris county |
| 83 | do | do | From cars at mine | Magnetite | 373 | Orchard, Randolph, Morris county |
| 84 | do | do | From ca. 50 tons on dock | do | 374 | Washington forge, Randolph, Morris county. |
| 85 | do | do | From ca. 110 tons on cars at mine | do | 375 | Mount Pleasant, Rockaway, Morris county. |
| 86 | do | do | From 4 cars of ore from shaft No. 7 | do | 376 | Richard, Rockaway, Morris county |
| 87 | do | do | From 5 cars of ore from shaft No. 6 | do | 377 | do |
| 88 | do | do | From 5 cars of ore from shaft No. 3 | do | 378 | do |
| 89 | do | do | From 3 cars of ore at mine | do | 379 | Allen, Rockaway, Morris county |
| 90 | do | do | From 12 cars of ore at mine | do | 380 | Teabo, Rockaway, Morris county |
| 91 | do | do | From 80 tons on cars; 24 hours output | do | 381 | Mount Hope, "Jugular", "Taylor", or "Tunnel vein", Rockaway, Morris county. |
| 92 | do | do | From stope, 60 feet below the surface | do | 382 | Mount Hope, Teabo vein, Rockaway, Morris county. |
| 93 | do | do | From 14 cars of ore at Port Oram | do | 383 | Mount Hope, Cross, or Elizabeth, vein, Rockaway, Morris county. |
| 94 | do | do | From 2 cars of ore near mine | Magnetite (weathered) | 384 | Hickory Hill, Brannin vein, Rockaway, Morris county. |
| 95 | do | do | From few tons near shaft | Magnetite | 385 | Denmark, Rockaway, Morris county |
| 96 | do | do | From 2 cars of ore on railroad at Dover | do | 386 | Beach Glen, Rockaway, Morris county. |
| 97 | do | do | From drift on top of stope, Scott's tract, 80 feet below tunnel level, northwest vein. | do | 387 | Glendon, "Hibernia", Rockaway, Morris county. |
| 98 | do | do | From drift on top of stope, Scott's tract, 80 feet below tunnel level, southeast vein. | do | 388 | do |
| 99 | do | do | From 24 cars on Hibernia railroad at Rockaway | do | 389 | do |
| 100 | do | do | From 14 cars on Hibernia railroad at Rockaway | do | 390 | Lower Wood, or Andover, (Hibernia), Rockaway, Morris county. |
| 101 | do | do | From canal-boat at Rockaway | do | 391 | Willis (Hibernia), Rockaway, Morris county. |
| 102 | do | do | From ca. 25 tons crushed ore at Splitrock forge | do | 392 | Cobb, Rockaway, Morris county |
| 103 | do | do | From 8 cars at mine; openings 1, 3, 5, and 2 | do | 393 | Green Pond, Rockaway, Morris county. |
| 104 | do | do | From 30 tons at mine | do | 394 | Charlotteburg, Rockaway, Morris county. |
| 105 | Chauvenet | do | From few tons at top of shaft No. 1 | do | 331 | Turkey Hill, Bethlehem, Hunterdon county. |
| 106 | do | do | From few tons at top of shaft No. 3 | do | 332 | do |
| 107 | do | do | From few tons at top of shaft No. 4 | do | 333 | do |
| 108 | do | do | From few tons at top of shaft, from near surface, much weathered. | Martite (?) | 334 | Hager, Holland, Hunterdon county |
| 109 | do | do | From few tons at top of new shaft | Magnetite | 335 | High Bridge, Hunterdon county |

NEW MEXICO.

| | | | | | | |
|---|---|---|---|---|---|---|
| 1 | Whitfield | Putnam | From outcrop | Magnetite | 1174 | Outcrop near Union Shaft, Cerrillos, Santa Aña county. |
| 2 | do | do | Part of the specimens collected by Professor St. John in 1880. | do | 1175 | Near Elizabethtown, Maxwell land grant, Colfax county. |

TABLE 25.—*Partial analyses of iron ores*—Continued.

NEW JERSEY—Continued.

| NATURAL ORE. | | | DRIED ORE. | | | P. ratio. | |
|---|---|---|---|---|---|---|---|
| P. | Fe. | Miscellaneous. | P. | Fe. | Miscellaneous. | | |
| *P. cent.* | *P. cent.* | | *P. cent.* | *P. cent.* | | *P. cent.* | |
| 0.025 | 56.59 | S 3.653 p. ct. | 0.025 | 56.60 | S 3.654 p. ct. | 0.044 | 50 |
| 0.048 | 52.00 | S 3.763 p. ct. | 0.048 | 52.13 | S 3.772 p. ct. | 0.092 | 51 52 |
| 0.075 | 46.47 | S 3.517 p. ct. | 0.075 | 46.55 | S 3.523 p. ct. | 0.101 | 53 54 55 |
| 0.057 | 48.38 | S 0.529 p. ct.; specific gravity, 3.939 | 0.058 | 48.88 | S 0.534 p. ct. | 0.118 | 56 |
| 0.112 | 50.84 | S 0.142 p. ct. | 0.112 | 51.81 | S 0.145 p. ct. | 0.220 | 57 |
| *0.086 | 55.84 | S 0.000; specific gravity, 4.112 | *0.086 | 56.00 | S 0.000 | 0.154 | 58 |
| *0.097 | 51.39 | S 4.158 p. ct.; specific gravity, 4.183 | *0.097 | 51.70 | S 4.183 p. ct. | 0.188 | 59 |
| 0.156 | 62.89 | $TiO_2$ present; specific gravity, 4.327 | 0.158 | 63.88 | $TiO_2$ present | 0.248 | 60 |
| 0.036 | 37.15 | $TiO_2$ present; specific gravity, 3.610 | 0.036 | 37.23 | do | 0.097 | 61 |
| 0.038 | 63.24 | $TiO_2$ present; specific gravity, 4.516 | 0.038 | 63.30 | do | 0.060 | 62 |
| 0.025 | 50.70 | $TiO_2$ present; specific gravity, 4.040 | 0.025 | 50.73 | do | 0.040 | 63 |
| 0.633 | 50.70 | $TiO_2$ present; specific gravity, 4.095 | 0.634 | 50.80 | do | 1.248 | 64 |
| 0.246 | 51.62 | $TiO_2$ present; specific gravity, 4.100 | 0.246 | 51.70 | do | 0.477 | 65 |
| 0.366 | 59.54 | $TiO_2$ present; specific gravity, 4.001 | 0.366 | 59.58 | do | 0.615 | 66 |
| 0.222 | 55.92 | $TiO_2$ present; specific gravity, 4.315 | 0.222 | 55.99 | do | 0.397 | 67 |
| 0.086 | 47.89 | $TiO_2$ present; specific gravity, 3.449 | 0.086 | 47.98 | do | 0.180 | 68 |
| 0.214 | 50.98 | $TiO_2$ present; specific gravity, 4.005 | 0.215 | 51.10 | do | 0.420 | 69 |
| 0.393 | 38.52 | $TiO_2$ present; specific gravity, 3.784 | 0.394 | 38.57 | do | 1.020 | 70 |
| 0.605 | 28.24 | $TiO_2$ present; specific gravity, 3.447 | 0.614 | 28.67 | do | 2.142 | 71 |
| 0.790 | 40.70 | Specific gravity, 3.799 | 0.790 | 41.00 | | 1.940 | 72 |
| 0.245 | 59.54 | Specific gravity, 4.571 | 0.245 | 59.66 | | 0.411 | 73 |
| 2.110 | 57.75 | Specific gravity, 4.537 | 2.113 | 57.82 | | 3.653 | 74 |
| 0.583 | 43.73 | Specific gravity, 3.843 | 0.584 | 43.84 | | 1.333 | 75 |
| 0.577 | 44.51 | Specific gravity, 4.093 | 0.578 | 44.55 | | 1.296 | 76 |
| 1.186 | 61.62 | | 1.187 | 61.68 | | 1.924 | 77 |
| 0.282 | 65.17 | Specific gravity, 4.814 | 0.282 | 65.23 | | 0.433 | 78 |
| 0.178 | 63.63 | | 0.178 | 63.72 | | 0.279 | 79 |
| 0.033 | 32.02 | Specific gravity, 3.409 | 0.033 | 32.15 | | 0.103 | 80 |
| 1.342 | 58.80 | Specific gravity, 4.607 | 1.343 | 58.84 | | 2.282 | 81 |
| 1.618 | 57.11 | Specific gravity, 4.402 | 1.620 | 57.17 | | 2.835 | 82 |
| 1.722 | 55.00 | | 1.723 | 55.04 | | 3.130 | 83 |
| 1.261 | 57.39 | Specific gravity, 4.521 | 1.262 | 57.45 | | 2.197 | 84 |
| 0.185 | 64.86 | Specific gravity, 4.845 | 0.185 | 64.89 | | 0.285 | 85 |
| 0.881 | 61.43 | Specific gravity, 4.703 | 0.882 | 61.52 | | 1.494 | 86 |
| 0.851 | 58.05 | Specific gravity, 4.522 | 0.852 | 58.14 | | 1.495 | 87 |
| 0.661 | 62.32 | Specific gravity, 4.699 | 0.661 | 62.34 | | 1.061 | 88 |
| 0.593 | 56.99 | | 0.594 | 57.06 | | 1.041 | 89 |
| 0.468 | 59.31 | Specific gravity, 4.521 | 0.468 | 59.35 | | 0.789 | 90 |
| 1.177 | 58.77 | Specific gravity, 3.736 | 1.178 | 58.80 | | 2.003 | 91 |
| 0.577 | 60.61 | Specific gravity, 4.590 | 0.577 | 60.66 | | 0.952 | 92 |
| 0.971 | 57.67 | Specific gravity, 4.524 | 0.972 | 57.73 | | 1.683 | 93 |
| 1.230 | 60.81 | Specific gravity, 4.643 | 1.230 | 60.83 | | 2.023 | 94 |
| 0.056 | 49.76 | Specific gravity, 4.313 | 0.056 | 49.77 | | 0.113 | 95 |
| 0.025 | 48.63 | Cr. present; specific gravity, 4.021 | 0.025 | 48.63 | Cr. present | 0.051 | 96 |
| 0.407 | 58.22 | Specific gravity, 4.514 | 0.408 | 58.34 | | 0.690 | 97 |
| 0.139 | 57.27 | Specific gravity, 4.491 | 0.139 | 57.33 | | 0.243 | 98 |
| 0.364 | 53.78 | | 0.364 | 53.81 | | 0.677 | 99 |
| 0.223 | 56.00 | Specific gravity, 4.420 | 0.223 | 56.03 | | 0.398 | 100 |
| 0.343 | 49.82 | Specific gravity, 4.187 | 0.343 | 49.84 | | 0.689 | 101 |
| 0.426 | 59.79 | | 0.426 | 59.79 | | 0.712 | 102 |
| 0.033 | 51.33 | Specific gravity, 4.326 | 0.033 | 51.37 | | 0.064 | 103 |
| 0.151 | 58.15 | Specific gravity, 4.428 | 0.151 | 58.20 | | 0.260 | 104 |
| 0.006 | 35.31 | S 0.126 p. ct. | 0.006 | 35.35 | S 0.126 p. ct. | 0.017 | 105 |
| 0.000 | 30.45 | S 0.034 p. ct. | 0.000 | 30.51 | S 0.034 p. ct. | 0.000 | 106 |
| 0.004 | 52.48 | S 0.013 p. ct. | 0.004 | 52.51 | S 0.013 p. ct. | 0.008 | 107 |
| 0.274 | 62.71 | S 0.093 p. ct.; specific gravity, 4.595 | 0.270 | 63.27 | S 0.094 p. ct. | 0.437 | 108 |
| 0.609 | 55.15 | S 5.172 p. ct. | 0.611 | 55.31 | S 5.187 p. ct. | 1.104 | 109 |

* Whitfield.

NEW MEXICO.

| | | | | | | | |
|---|---|---|---|---|---|---|---|
| 0.008 | 65.59 | | 0.008 | 65.78 | | 0.012 | 1 |
| 0.051 | 56.80 | | 0.051 | 56.90 | | 0.090 | 2 |

TABLE 25.—*Partial analyses of iron ores*—Continued.

NEW YORK.

| | Chemist. | Sampler. | Remarks. | Kind of ore. | Number. | Name and location of mine. |
|---|---|---|---|---|---|---|
| 1 | Whitfield | Putnam | From 460 tons at mine | Magnetite | 400 | Crawford (Sterling mines), Warwick, Orange county. |
| 2 | do | do | From cars | do | 701 | Red Back (Sterling mines), Monroe, Orange county. |
| 3 | do | do | do | do | 702 | Tiptop (Sterling mines), Warwick, Orange county. |
| 4 | do | do | From 50 tons on cars | do | 703 | Scott (Sterling mines), Monroe, Orange county. |
| 5 | do | do | do | do | 704 | Lake mine (Sterling mines), Warwick, Orange county. |
| 6 | do | do | From 250 tons at mine | do | 705 | Sterling, (Sterling mines), Warwick, Orange county. |
| 7 | do | do | Selected pieces of tabular crystalline ore in same pile as No. 705. | do | 706 | do |
| 8 | do | do | From 100 tons at Greenwood furnace | do | 707 | Hogencamp (Greenwood mines), Monroe, Orange county. |
| 9 | do | do | From 75 tons at Greenwood furnace | do | 708 | Forshee, (Greenwood mines), Monroe, Orange county. |
| 10 | do | do | From 100 tons at Greenwood furnace | do | 709 | Bull (Greenwood mines), Monroe, Orange county. |
| 11 | do | do | From 30 tons at Greenwood furnace | do | 710 | Warwick, Warwick, Orange county |
| 12 | do | do | From 2,000 tons at mine | do | 711 | Forest of Dean, Monroe, Orange county. |
| 13 | do | do | From 150 tons at West Point furnace | Limonite | 728 | Cornwall Hematite, Cornwall (?), Orange county. |
| 14 | do | do | From selected pieces of "shot" ore, ocher matrix, at mine. | do | 712 | New Dorp, Staten Island, Richmond county. |
| 15 | do | do | From 100 tons rock ore at mine | do | 713 | do |
| 16 | do | do | From 3,000 tons washed ore at mine | do | 714 | do |
| 17 | do | do | From 500 tons washed ore at mine | do | 715 | Tyson's Four Corners, Staten island, Richmond county. |
| 18 | do | do | From 100 tons rock ore at mine | do | 716 | do |
| 19 | do | do | From 25 tons "manganese" (earthy) at mine | do | 717 | do |
| 20 | do | do | From 20 tons fine-screened ore at mine | do | 718 | John Tolles, Staten island, Richmond county. |
| 21 | do | do | From 50 tons screened ore at mine | do | 719 | Cooper & Hewitt's, Staten island, Richmond county. |
| 22 | do | do | From selected chippings of hard, dark-colored ore at mine. | do | 720 | do |
| 23 | do | do | From 350 tons at West Point furnace | Magnetite | 725 | Verplanck Point, Cortland, Westchester county. |
| 24 | do | do | From 70 tons at West Point furnace | do | 730 | Steven's, Long Mountain, Haverstraw, Rockland county. |
| 25 | do | do | From 50 tons of washed ore at mine | Limonite | 769 | Reynolds, Ancram, Columbia county |
| 26 | do | do | From 20 tons of mixed washed and rock ore at mine. | do | 770 | Copake, Copake, Columbia county |
| 27 | do | do | From 75 tons of "dead-head" | Carbonate | 771 | do |
| 28 | do | do | From washed ore at Hudson furnace | Limonite | 1102 | Wood, Ancram (?), Columbia county |
| 29 | do | do | From 2,000 tons of spathic ore at Hudson furnace. | Carbonate | 1103 | Hudson River Spathic Iron Company, Catskill, Columbia county. |
| 30 | do | do | From 285 tons No. 1 ore, No. 1 shaft, bottom stope, on dock at Peekskill furnace. | Magnetite | 721 | Croft, Putnam valley, Putnam county |
| 31 | do | do | From 185 tons No. 2 ore, No. 2 shaft, top stope, on dock at Peekskill furnace. | do | 722 | do |
| 32 | do | do | From 400 tons of ore from main shaft on dock at Peekskill furnace. | do | 723 | Todd, Philipston, Putnam county |
| 33 | do | do | From 50 tons of ore from tunnel at mine | do | 724 | do |
| 34 | do | do | From 175 tons of ore at West Point furnace | do | 726 | Pratt & Sackett, Putnam valley, Putnam county. |
| 35 | do | do | From West Point furnace; ore taken out 15 to 20 years ago. | do | 727 | Rose, Kent, Putnam county |
| 36 | do | do | From 100 tons at West Point furnace | do | 729 | West Point furnace, island in lake Mahopac, Carmel, Putnam county. |
| 37 | do | do | From 100 tons at mine | do | 731 | Stuart, or Sunk, Putnam valley, Putnam county. |
| 38 | do | do | From 2,000 tons at new mine | do | 732 | Lake Mahopac Iron Company, Carmel, Putnam county. |
| 39 | do | do | From 1,000 tons, No. 2 ore, at mine | do | 733 | McCallum (Cheever & Durant's), South East, Putnam county. |
| 40 | do | do | From 300 tons, No. 1 ore, at mine | do | 734 | do |
| 41 | do | do | From 25 tons ore from west vein at mine | do | 735 | do |
| 42 | do | do | From 2,500 tons at mine | do | 736 | Theall (Cheever & Durant's), South East, Putnam county. |
| 43 | do | do | From 500 tons at mine | do | 737 | Brewster (Cheever & Durant's), South East, Putnam county. |
| 44 | do | do | From mine, south side room, No. 2, N., 300-foot level, from near foot-wall to point one-third the way across the vein. | do | 738 | Tilly Foster, South East, Putnam county. |
| 45 | do | do | From mine, same room as above, middle of the vein. | do | 739 | do |
| 46 | do | do | From same room as above near hanging wall | do | 740 | do |
| 47 | do | do | From mine, 400-foot level, along drift south of shaft. | do | 741 | do |
| 48 | do | do | From mine, room No. 4, S., 300-foot level along roof, contains much chondrodite. | do | 742 | do |
| 49 | do | do | From cars at mine, ore from 110-foot level, Duncan shaft. | do | 743 | do |
| 50 | do | do | From cars at mine, general output 300- (and 400-) foot level. | do | 744 | do |
| 51 | do | do | From cars, selected pieces of variety with green mica. | do | 745 | do |
| 52 | do | do | From cars, selected pieces of apparently nearly pure magnetite. | do | 746 | do |
| 53 | do | do | From drift | Limonite | 747 | Pawling, Pawling, Duchess county |
| 54 | do | do | From car, washed ore | do | 748 | do |

TABLE 25.—*Partial analyses of iron ores*—Continued.

NEW YORK.

| NATURAL ORE. | | | DRIED ORE. | | | P. ratio. | |
|---|---|---|---|---|---|---|---|
| P. | Fe. | Miscellaneous. | P. | Fe. | Miscellaneous. | | |
| *P. cent.* | *P. cent.* | | *P. cent.* | *P. cent.* | | *P. cent.* | |
| 2.004 | 57.06 | S 0.178 p. ct.; Mn. present; $TiO_2$ present; specific gravity, 3.988. | 2.005 | 57.70 | S 0.178 p. ct.; Mn. present; $TiO_2$ present | 3.470 | 1 |
| 0.028 | 52.93 | S 3.603 p. ct | 0.028 | 53.03 | S 3.610 p. ct | 0.053 | 2 |
| 1.751 | 54.03 | S 0.173 p. ct.: Mn. present; $TiO_2$ present | 1.758 | 54.24 | S 0.174 p. ct.; Mn. present; $TiO_2$ present | 3.241 | 3 |
| 0.711 | 62.59 | S 0.082 p. ct.; Mn. present; $TiO_2$ present | 0.712 | 62.65 | S 0.082 p. ct.; Mn. present; $TiO_2$ present | 1.136 | 4 |
| 1.205 | 57.25 | S 0.088 p. ct.; Mn. present | 1.206 | 57.31 | S 0.088 p. ct.; Mn. present | 2.105 | 5 |
| 0.284 | 61.01 | S 0.371 p. ct | 0.284 | 61.07 | S 0.371 p. ct | 0.465 | 6 |
| 0.145 | 67.75 | S 0.365 p. ct | 0.145 | 67.79 | S 0.365 p. ct | 0.214 | 7 |
| 0.033 | 52.93 | S 2.399 p. ct.; Mn. present | 0.033 | 52.99 | S 2.402 p. ct.; Mn. present | 0.062 | 8 |
| 0.020 | 40.33 | S 0.453 p. ct.; Mn. present | 0.020 | 40.35 | S 0.453 p. ct.; Mn. present | 0.050 | 9 |
| 0.290 | 51.30 | S 0.464 p. ct.; Mn. present; $TiO_2$ present | 0.391 | 51.43 | S 0.465 p. ct.; Mn. present; $TiO_2$ present | 0.760 | 10 |
| 0.092 | 52.35 | S 2.748 p. ct | 0.092 | 52.40 | S 2.750 p. ct | 0.176 | 11 |
| 0.021 | 63.00 | S 0.148 p. ct | 0.022 | 63.07 | S 0.148 p. ct | 0.084 | 12 |
| 0.240 | 28.57 | Mn. present | 0.241 | 28.73 | Mn. present | 0.840 | 13 |
| 0.107 | 29.86 | $TiO_2$ present | 0.111 | 30.90 | $TiO_2$ present | 0.358 | 14 |
| 0.043 | 47.21 | Mn. present; $TiO_2$ present | 0.044 | 47.84 | Mn. present; $TiO_2$ present | 0.091 | 15 |
| 0.059 | 39.72 | S 0.391 p. ct. Complete analysis | 0.060 | 40.63 | S 0.400 p. ct | 0.148 | 16 |
| 0.079 | 48.74 | Mn. present; $TiO_2$ present | 0.081 | 49.73 | Mn. present; $TiO_2$ present | 0.162 | 17 |
| 0.080 | 41.64 | $TiO_2$ present | 0.082 | 42.82 | $TiO_2$ present | 0.192 | 18 |
| 0.050 | 51.20 | Mn. 1.16 p. ct.; $Cr_2O_3$ present | 0.051 | 51.93 | Mn. 1.18 p. ct.; $Cr_2O_3$ present | 0.098 | 19 |
| 0.048 | 31.81 | | 0.049 | 32.46 | | 0.151 | 20 |
| 0.022 | 38.86 | Mn. present | 0.022 | 39.41 | Mn. present | 0.057 | 21 |
| 0.003 | 51.57 | do | 0.003 | 52.36 | do | 0.006 | 22 |
| 0.072 | 39.93 | | 0.072 | 39.99 | | 0.180 | 23 |
| 0.061 | 44.47 | Mn. present | 0.061 | 44.76 | Mn. present | 0.137 | 24 |
| 0.056 | 40.61 | | 0.057 | 40.98 | | 0.138 | 25 |
| 0.424 | 46.79 | | 0.428 | 47.23 | | 0.906 | 26 |
| 0.248 | 30.82 | | 0.249 | 30.98 | | 0.805 | 27 |
| 0.083 | 40.21 | | 0.084 | 40.65 | | 0.206 | 28 |
| 0.159 | 41.41 | | 0.161 | 41.88 | | 0.384 | 29 |
| 0.012 | 59.83 | | 0.012 | 60.05 | | 0.020 | 30 |
| 0.066 | 54.08 | | 0.066 | 54.15 | | 0.122 | 31 |
| 0.033 | 44.34 | | 0.033 | 44.38 | | 0.074 | 32 |
| 0.087 | 47.58 | | 0.087 | 47.66 | | 0.183 | 33 |
| 0.663 | 57.23 | | 0.664 | 57.81 | | 1.158 | 34 |
| 0.064 | 51.90 | Mn. present | 0.064 | 51.98 | Mn. present | 0.123 | 35 |
| 0.021 | 44.34 | do | 0.021 | 44.50 | do | 0.047 | 36 |
| 0.359 | 57.23 | $TiO_2$ present | 0.359 | 57.23 | $TiO_2$ present | 0.627 | 37 |
| 0.010 | 61.87 | | 0.010 | 61.89 | | 0.016 | 38 |
| 0.255 | 43.22 | $TiO_2$ present | 0.255 | 43.39 | $TiO_2$ present | 0.590 | 39 |
| 0.247 | 51.48 | | 0.247 | 51.56 | | 0.480 | 40 |
| 0.035 | 59.83 | Mn. present | 0.035 | 59.90 | Mn. present | 0.058 | 41 |
| 0.260 | 44.24 | | 0.260 | 44.31 | | 0.588 | 42 |
| 0.074 | 64.09 | | 0.074 | 64.18 | | 0.115 | 43 |
| 0.015 | 48.91 | S 0.548 p. ct. Complete analysis | 0.015 | 49.05 | S 0.550 p. ct | 0.031 | 44 |
| 0.030 | 49.16 | | 0.030 | 49.37 | | 0.061 | 45 |
| 0.017 | 46.28 | | 0.017 | 46.33 | | 0.037 | 46 |
| 0.016 | 51.20 | | 0.016 | 51.24 | | 0.031 | 47 |
| 0.006 | 48.88 | | 0.006 | 48.96 | | 0.012 | 48 |
| 0.007 | 49.66 | S 0.538 p. ct. Complete analysis | 0.007 | 49.74 | S 0.539 p. ct | 0.014 | 49 |
| 0.018 | 48.14 | | 0.018 | 48.19 | | 0.037 | 50 |
| 0.039 | 39.33 | | 0.039 | 39.56 | | 0.099 | 51 |
| 0.014 | 60.01 | | 0.014 | 60.08 | | 0.023 | 52 |
| 0.113 | 43.22 | | 0.114 | 43.79 | | 0.261 | 53 |
| 0.137 | 47.12 | | 0.138 | 47.50 | | 0.291 | 54 |

TABLE 25.—*Partial analyses of iron ores*—Continued.

NEW YORK—Continued.

| | Chemist. | Sampler. | Remarks. | Kind of ore. | Number. | Name and location of mine. |
|---|---|---|---|---|---|---|
| 55 | Whitfield | Putnam | From 25 tons washed ore at mine | Limonite | 749 | Valley Pond Iron Company, Pawling, Duchess county. |
| 56 | do | do | From 50 tons rock ore at mine | do | 750 | do |
| 57 | do | do | From few tons of washed ore on cars | do | 751 | Beekmanville, Beekman, Duchess county. |
| 58 | do | do | From few tons of rock ore at mine | do | 752 | do |
| 59 | do | do | From 50 tons washed ore on cars | do | 753 | Sylvan Lake, Beekman, Duchess county. |
| 60 | do | do | From 40 tons rock ore at mine | do | 754 | do |
| 61 | do | do | From 70 tons washed and rock ore on cars; principally washed ore. | do | 755 | Fishkill, East Fishkill, Duchess county. |
| 62 | do | do | From 350 tons rock ore at Clove Spring furnace. | do | 756 | Clove Spring, Unionvale, Duchess county. |
| 63 | do | do | From 500 tons washed ore at Clove Spring furnace. | do | 757 | do |
| 64 | do | do | From 150 tons washed ore at mine | do | 758 | Tower's Spring, Unionvale, Duchess county. |
| 65 | do | do | From three cars at station | do | 759 | Dover Furnace, or White Ore Bed, Dover, Duchess county. |
| 66 | do | do | From selected pieces of compact ore at mine | do | 760 | do |
| 67 | do | do | From few tons washed ore at mine | do | 761 | Amenia, Amenia, Duchess county |
| 68 | do | do | From 200 tons washed ore at mine | do | 762 | Gridley & Sons, Amenia, Duchess county. |
| 69 | do | do | From mine. "Dead-head" | Carbonate | 763 | do |
| 70 | do | do | From 34 tons washed ore on cars | Limonite | 764 | Manhattan, Amenia, Duchess county |
| 71 | do | do | From selected pieces of crystallized ore at mine | do | 765 | do |
| 72 | do | do | From 400 tons of washed ore at mine | do | 766 | Maltby, North East, Duchess county |
| 73 | do | do | From 500 tons of rock ore at mine | do | 767 | do |
| 74 | do | do | From 600 tons of washed ore at mine | do | 768 | Riga, North East, Duchess county |
| 75 | do | do | From a few tons of rock ore at Hudson furnace | do | 1101 | Dakin, Hudson furnace, North East, Duchess county. |
| 76 | Richmond | do | From 1,500 tons of ore at mine | Magnetite | 1177 | Potter mine, Fort Ann, Washington county. |
| 77 | do | do | From 1,000 tons of ore near west end of tunnel | do | 1178 | Mount Hope mine, Fort Ann, Washington county. |
| 78 | do | do | From 2,500 tons of ore from north pit | do | 1179 | Lee mine, Moriah, Essex county |
| 79 | do | do | From 1,500 tons of ore from south pit | do | 1180 | do |
| 80 | do | do | Across south end of breast | do | 1181 | Cheever ore bed, Moriah, Essex county. |
| 81 | do | do | Middle of breast from foot-wall to rock midway between walls. | do | 1182 | do |
| 82 | do | do | Middle of breast from rock to hanging-wall | do | 1183 | do |
| 83 | do | do | Across north end of breast | do | 1184 | do |
| 84 | do | do | Selected chippings from 100 tons of lump ore on dock. | Magnetite (lump ore) | 1185 | do |
| 85 | do | do | From 500 tons at Bay State Iron Company's furnace. | Magnetite (fine ore) | 1186 | do |
| 86 | do | do | From 30,000 tons at Port Henry | Magnetite (lump ore) | 1187 | Mine No. 21, Moriah, Essex county |
| 87 | do | do | From 40,000 tons at Port Henry | Magnetite (fine ore) | 1188 | do |
| 88 | do | do | From 16,000 tons at Port Henry | Magnetite (surface ore) | 1189 | do |
| 89 | do | do | From 8,500 tons at Port Henry | Magnetite | 1190 | Fisher Hill, Moriah, Essex county |
| 90 | do | do | From 23,000 tons at Port Henry | Magnetite (lump ore) | 1191 | Old Bed, Moriah, Essex county |
| 91 | do | do | From 38,000 tons at Port Henry | Magnetite (fine ore) | 1192 | do |
| 92 | do | do | From 5,000 tons at Port Henry | Magnetite | 1193 | New Bed, Moriah, Essex county |
| 93 | do | do | From 200 tons at Port Henry | Magnetite (lump ore) | 1194 | Cook's shaft (Smith mine), Moriah, Essex county. |
| 94 | do | do | From 3,000 tons at Port Henry | Magnetite (fine ore) | 1195 | do |
| 95 | do | do | From 500 tons of ore at Bay State Iron Company's furnace. | Magnetite | 1196 | Barton Hill, Moriah, Essex county |
| 96 | do | do | From 30 tons primitive ore at Putnam's forge, near Russia. | do | 1197 | Gates mine, Elizabethtown, Essex county. |
| 97 | do | do | From 15 tons separated at Putnam's forge | Magnetite (separated ore). | 1198 | do |
| 98 | do | do | From 50 tons of primitive ore near separator | Magnetite | 1199 | Hale mine, Keen, Essex county |
| 99 | do | do | From 100 tons separated ore at separator | Magnetite (separated ore). | 1200 | do |
| 100 | do | do | From separated ore at forges | do | 1347 | Hammondville, or Crown Point, Crown Point, Essex county. |
| 101 | do | do | From 7,000 tons of ore at pit No. 8 | Magnetite | 1348 | do |
| 102 | do | do | From 3,000 tons of ore at Crown Point | do | 1349 | do |
| 103 | do | do | From 30 tons of ore from pit No. 8 at Crown Point furnace. | do | 1350 | do |
| 104 | do | do | From broken ore in stope, Welch shaft | do | 1351 | Welsh shaft, Port Henry Iron Company, Moriah, Essex county. |
| 105 | do | do | From broken ore in stope | Magnetite (compact ore). | 1352 | Mine No. 21, Port Henry Iron Company, Moriah, Essex county. |
| 106 | do | do | From cars at mine | Magnetite | 1353 | Noland's shaft, Port Henry Iron Company, Moriah, Essex county. |
| 107 | do | do | do | do | 1354 | Miller pit, Witherbee, Sherman & Co., Moriah, Essex county. |
| 108 | do | do | do | do | 1355 | Pott's shaft, Witherbee, Sherman & Co., Moriah, Essex county. |
| 109 | do | do | do | do | 1356 | Old Bed, Witherbee, Sherman & Co., Moriah, Essex county. |
| 110 | do | do | do | do | 1357 | Teft shaft, Witherbee, Sherman & Co., Moriah, Essex county. |
| 111 | do | do | do | do | 1358 | Barton Hill (south side), Moriah, Essex county. |
| 112 | do | do | From 75 tons at top of shaft | do | 1359 | New Teft, east shaft, Moriah, Essex county. |
| 113 | do | do | From 6,000 tons of ore at separator | do | 1301 | Palmer Hill, Black Brook, Clinton county. |
| 114 | do | do | From 7,500 tons of separated ore at separator | do | 1302 | do |
| 115 | do | do | From 500 tons of primitive ore at separator | do | 1303 | Palmer Hill, Pennsylvania Steel and Iron Co.'s pit, Black Brook, Clinton county. |
| 116 | do | do | From 1,000 tons of separated ore at separator | do | 1304 | do |

TABLE 25.—*Partial analyses of iron ores*—Continued.

NEW YORK—Continued.

| NATURAL ORE. | | | DRIED ORE. | | | P. ratio. | |
|---|---|---|---|---|---|---|---|
| P. | Fe. | Miscellaneous. | P. | Fe. | Miscellaneous. | | |
| *P. cent.* | *P. cent.* | | *P. cent.* | *P. cent.* | | *P. cent.* | |
| 0.165 | 48.93 | | 0.167 | 49.39 | | 0.337 | 55 |
| 0.158 | 48.70 | | 0.160 | 49.37 | | 0.324 | 56 |
| 0.069 | 29.50 | Mn. present | 0.070 | 29.74 | Mn. present | 0.234 | 57 |
| 0.050 | 51.85 | do | 0.051 | 52.39 | do | 0.096 | 58 |
| 0.050 | 48.48 | do | 0.050 | 48.81 | do | 0.103 | 59 |
| 0.041 | 47.05 | do | 0.041 | 47.32 | do | 0.087 | 60 |
| 0.073 | 40.92 | S 0.143 p. ct. Complete analysis | 0.074 | 41.29 | S 0.144 p. ct. | 0.179 | 61 |
| 0.083 | 48.74 | | 0.084 | 49.21 | | 0.170 | 62 |
| 0.128 | 45.22 | | 0.129 | 45.68 | | 0.283 | 63 |
| 0.049 | 34.18 | | 0.050 | 34.57 | | 0.143 | 64 |
| 0.203 | 37.75 | | 0.205 | 38.12 | | 0.538 | 65 |
| 0.743 | 52.50 | | 0.752 | 53.14 | | 1.415 | 66 |
| 0.092 | 46.28 | | 0.092 | 46.50 | | 0.190 | 67 |
| 0.413 | 48.99 | S 0.152 p. ct. Complete analysis | 0.415 | 49.25 | S 0.153 p. ct. | 0.843 | 68 |
| 0.053 | 42.94 | | 0.053 | 43.15 | | 0.123 | 69 |
| 0.086 | 47.77 | | 0.087 | 48.08 | | 0.180 | 70 |
| 0.038 | 50.13 | Mn. 1.49 p. ct | 0.038 | 50.48 | Mn. 1.50 p. ct | 0.076 | 71 |
| 0.156 | 41.00 | | 0.157 | 41.36 | | 0.380 | 72 |
| 0.215 | 48.05 | | 0.217 | 48.39 | | 0.447 | 73 |
| 0.611 | 41.58 | | 0.621 | 42.26 | | 1.470 | 74 |
| 0.357 | 40.35 | | 0.358 | 40.51 | | 0.885 | 75 |
| 0.000 | 61.82 | $TiO_2$ absent | 0.000 | 62.03 | $TiO_2$ absent | 0.000 | 76 |
| 0.055 | 36.99 | do | 0.055 | 37.03 | do | 0.140 | 77 |
| 0.047 | 45.01 | do | 0.047 | 45.05 | do | 0.104 | 78 |
| 0.034 | 44.38 | do | 0.034 | 44.42 | do | 0.077 | 79 |
| 0.643 | 65.33 | $TiO_2$ present | 0.644 | 65.47 | $TiO_2$ present | 0.984 | 80 |
| 0.603 | 63.50 | $TiO_2$ absent | 0.604 | 63.56 | $TiO_2$ absent | 0.950 | 81 |
| 0.689 | 63.86 | $TiO_2$ present | 0.690 | 63.94 | $TiO_2$ present | 1.079 | 82 |
| 0.452 | 64.42 | do | 0.452 | 64.48 | do | 0.702 | 83 |
| 0.673 | 64.77 | do | 0.674 | 64.82 | do | 1.039 | 84 |
| 0.573 | 63.08 | do | 0.574 | 63.16 | do | 0.908 | 85 |
| 1.496 | 61.39 | do | 1.496 | 61.39 | do | 2.437 | 86 |
| 1.118 | 62.66 | do | 1.119 | 62.70 | do | 1.784 | 87 |
| 1.198 | 62.10 | do | 1.200 | 62.20 | do | 1.928 | 88 |
| 0.030 | 46.91 | do | 0.030 | 46.96 | do | 0.064 | 89 |
| 1.129 | 61.46 | do | 1.130 | 61.52 | do | 1.837 | 90 |
| 0.967 | 63.01 | do | 0.968 | 63.08 | do | 1.535 | 91 |
| 0.002 | 43.74 | $TiO_2$ absent | 0.002 | 43.76 | $TiO_2$ absent | 0.005 | 92 |
| 0.946 | 62.66 | $TiO_2$ present | 0.947 | 62.74 | $TiO_2$ present | 1.510 | 93 |
| 0.870 | 62.80 | do | 0.871 | 62.90 | do | 1.385 | 94 |
| 0.048 | 49.86 | do | 0.048 | 49.94 | do | 0.096 | 95 |
| 0.456 | 43.21 | do | 0.457 | 43.29 | do | 1.055 | 96 |
| 0.136 | 64.14 | do | 0.136 | 64.21 | do | 0.212 | 97 |
| 0.000 | 49.37 | $TiO_2$ absent | 0.000 | 49.49 | $TiO_2$ absent | 0.000 | 98 |
| 0.002 | 59.92 | do | 0.002 | 60.00 | do | 0.003 | 99 |
| 0.030 | 63.30 | $TiO_2$ present | 0.030 | 63.36 | $TiO_2$ present | 0.047 | 100 |
| 0.090 | 50.73 | do | 0.090 | 50.79 | do | 0.177 | 101 |
| 0.029 | 49.09 | do | 0.029 | 49.20 | do | 0.059 | 102 |
| 0.107 | 52.25 | do | 0.107 | 52.33 | do | 0.200 | 103 |
| 1.266 | 57.71 | do | 1.268 | 57.78 | do | 2.194 | 104 |
| 0.465 | 67.38 | do | 0.466 | 67.46 | do | 0.689 | 105 |
| 1.282 | 61.39 | do | 1.283 | 61.42 | do | 2.088 | 106 |
| 0.830 | 60.54 | do | 0.830 | 60.57 | do | 1.371 | 107 |
| 1.302 | 61.53 | do | 1.303 | 61.58 | do | 2.116 | 108 |
| 0.908 | 62.64 | do | 0.909 | 62.68 | do | 1.449 | 109 |
| 0.876 | 61.92 | do | 0.877 | 61.96 | do | 1.253 | 110 |
| 0.019 | 39.15 | do | 0.019 | 39.17 | do | 0.049 | 111 |
| 0.019 | 52.58 | do | 0.019 | 52.61 | do | 0.036 | 112 |
| 0.023 | 44.94 | | 0.023 | 44.96 | | 0.053 | 113 |
| 0.007 | 66.03 | | 0.007 | 66.06 | | 0.010 | 114 |
| 0.000 | 33.52 | | 0.000 | 33.73 | | 0.000 | 115 |
| 0.002 | 63.45 | | 0.002 | 63.48 | | 0.003 | 116 |

TABLE 25.—*Partial analyses of iron ores*—Continued.

NEW YORK—Continued.

| | Chemist. | Sampler. | Remarks. | Kind of ore. | Number. | Name and location of mine. |
|---|---|---|---|---|---|---|
| 117 | Richmond | Putnam | From 400 tons of primitive ore at new separator. | Magnetite | 1313 | Bowen and Signors, Black Brook, Clinton county. |
| 118 | do | do | From 100 tons of separated ore at old separator. | do | 1314 | do |
| 119 | do | do | From a few tons of crushed ore at separator | do | 1315 | Tremblay's, Black Brook, Clinton county. |
| 120 | do | do | From a few tons of separated ore at separator | do | 1316 | do |
| 121 | do | do | From stope, second level, 300 feet north of shaft, "gray vein." | do | 1305 | Arnold, Ausable, Clinton county |
| 122 | do | do | From third level, about 200 feet north of shaft, "gray vein." | Martite (?) | 1306 | do |
| 123 | do | do | From end of drift, second level, 400 feet south of shaft, "black vein." | do | 1307 | do |
| 124 | do | do | Chippings from large lumps from pile of 4,000 tons of shipping or "chunk" ore, "old blue vein." | Magnetite | 1310 | do |
| 125 | do | do | From fine ore in pile of ca. 4,000 tons of "chunk" (shipping) ore. | do | 1311 | do |
| 126 | do | do | From ca. 2,000 tons of separated ore at Ferona station. | do | 1312 | do |
| 127 | do | do | From 300 tons of separated ore at separator | do | 1308 | Nelson Bush (New Arnold), Ausable, Clinton county. |
| 128 | do | do | From ca. 1,500 tons of ore at station | do | 1309 | do |
| 129 | do | do | From 22 cars of furnace ore ready for shipment. | do | 1317 | Chateaugay, Dannemora, Clinton county. |
| 130 | do | do | From 100 tons separated ore at No. 2 separator | do | 1318 | do |
| 131 | do | do | From 150 tons separated ore at No. 3 separator | do | 1319 | do |
| 132 | do | do | From 150 tons separated ore at separator | do | 1320 | "81," Dannemora, Clinton county |
| 133 | do | do | From 300 tons of ore at separator | do | 1321 | do |
| 134 | do | do | From 2,300 tons of ore at Franklin furnace | Fossil | 1322 | Franklin Iron Company, Kirkland, Oneida county. |
| 135 | do | do | From 30 tons of ore at mine | do | 1328 | Norton's, Kirkland, Oneida county |
| 136 | do | do | From ore at mine | do | 1329 | Butler ore bed, Kirkland, Oneida county. |
| 137 | do | do | From 400 tons of ore at mine | do | 1330 | Well's ore bed, Kirkland, Oneida county. |
| 138 | do | do | From a few tons of ore at mine | do | 1323 | Davis', New Hartford, Oneida county |
| 139 | do | do | From 40 tons of ore at Kirkland furnace | do | 1324 | Pryers' ore bed, Westmoreland, Oneida county. |
| 140 | do | do | From 100 tons of ore at mine | do | 1325 | Derwin's farm, Westmoreland, Oneida county. |
| 141 | do | do | do | do | 1326 | Caglin's farm, Onondago Iron Co., Verona, Oneida county. |
| 142 | do | do | From a few tons of ore at mine | do | 1327 | John Klein's, Verona, Oneida county |
| 143 | do | do | From 150 tons of ore at mine | do | 1331 | La Frois' ore bed, Ontario, Wayne county. |
| 144 | do | do | From a few tons of ore at mine | do | 1332 | Hurley's ore bed, Ontario, Wayne county. |
| 145 | do | do | do | do | 1333 | Ontario Iron Co. (East bed), Ontario, Wayne county. |
| 146 | do | do | From 30 tons of ore at mine | do | 1334 | Bundy's ore bed, Ontario, Wayne county. |
| 147 | do | do | From 3 car-loads of ore at mine | Hematite | 1341 | Keene, Antwerp, Jefferson county |
| 148 | do | do | From cars at station | do | 1342 | Dickson, Antwerp, Jefferson county |
| 149 | do | do | do | do | 1343 | Old Stirling, Antwerp, Jefferson county. |
| 150 | do | do | From 25 tons sorted ore at mine | do | 1344 | Shurtliff, Philadelphia, Jefferson county. |
| 151 | do | do | From a few tons of sorted ore at mine | do | 1336 | Little Kearny, or New Kearny, Gouverneur, Saint Lawrence county. |
| 152 | do | do | From 4,000 tons of ore at mine | do | 1337 | Karney, Gouverneur, Saint Lawrence county. |
| 153 | do | do | From pillar in Dillman's pit, about 100 feet below surface. | do | 1338 | Caledonia, Rossie, Saint Lawrence county. |
| 154 | do | do | From cars at mine, ore from Fox pit and end of cross-drift at bottom of west slides. | do | 1339 | do |
| 155 | do | do | From cars at mine, ore from Shatreau's pit | do | 1340 | do |
| 156 | do | do | From 500 tons of ore at Alpine furnace | Magnetite | 1345 | Jay ore bed, Fine, Saint Lawrence county. |

NORTH CAROLINA.

| | | | | | | |
|---|---|---|---|---|---|---|
| 1 | Pitman | Willis | Specimens of ore from test pit | Specular | 151 | Lobdel's, near Gaston, Halifax county. |
| 2 | do | do | Surface ore from ledge exposed in old pit | Limonite | 152 | Old Frost mine, Wilson's Mills, Johnson county. |
| 3 | do | do | From concretions thrown from two small pits | do | 153 | D. T. Boney's, near Teachey's, Duplin county. |
| 4 | do | do | From ore near old pit | do | 154 | Bloomary, near Wilson's, Nash county. |
| 5 | do | do | From blocks of lean ore in old pits | Specular | 155 | Buckhorn, Cape Fear river, Harnett county. |
| 6 | do | do | From 200 pounds thrown out in opening coal mine, "Ball ore." | Carbonate | 156 | J. L. Horton's coal mine, The Gulf, Chatham county. |
| 7 | do | do | From bed 20 feet below surface, "Blackband" | do | 161 | do |
| 8 | do | do | From 5 tons of ore near the openings | Specular | 157 | Evan's coal mine, near The Gulf, Chatham county. |
| 9 | do | do | From bed in shaft 16 feet deep | Limonite | 162 | Opening 50 feet south of Stinson road, ½ mile west of The Gulf, Chatham county. |
| 10 | do | do | From 1½ tons of ore near shaft 90 feet deep | do | 158 | Opening No. 11, 90-foot shaft, Ore Hill, Chatham county. |

TABLE 25.—*Partial analyses of iron ores*—Continued.

NEW YORK—Continued.

| NATURAL ORE. | | | DRIED ORE. | | | P. ratio. | |
|---|---|---|---|---|---|---|---|
| P. | Fe. | Miscellaneous. | P. | Fe. | Miscellaneous. | | |
| *P. cent.* | *P. cent.* | | *P. cent.* | *P. cent.* | | *P. cent.* | |
| 0.124 | 34.28 | $TiO_2$ absent | 0.124 | 34.33 | $TiO_2$ absent | 0.362 | 117 |
| 0.037 | 66.78 | do | 0.037 | 66.81 | do | 0.055 | 118 |
| 0.017 | 28.62 | do | 0.017 | 28.63 | do | 0.059 | 119 |
| 0.004 | 65.01 | $TiO_2$ present | 0.004 | 65.04 | $TiO_2$ present | 0.006 | 120 |
| 0.079 | 59.92 | $TiO_2$ absent | 0.079 | 59.94 | $TiO_2$ absent | 0.131 | 121 |
| 0.113 | 61.28 | do | 0.113 | 61.28 | do | 0.184 | 122 |
| 0.012 | 62.84 | do | 0.012 | 62.84 | do | 0.019 | 123 |
| 0.114 | 62.05 | do | 0.114 | 62.06 | do | 0.184 | 124 |
| 0.191 | 60.87 | $TiO_2$ present | 0.191 | 60.89 | $TiO_2$ present | 0.314 | 125 |
| 0.107 | 63.96 | do | 0.107 | 63.97 | do | 0.167 | 126 |
| 0.102 | 61.62 | $TiO_2$ trace | 0.102 | 61.63 | $TiO_2$ trace | 0.165 | 127 |
| 0.344 | 54.60 | $TiO_2$ present | 0.344 | 54.63 | $TiO_2$ present | 0.630 | 128 |
| 0.011 | 45.21 | $TiO_2$ absent | 0.011 | 45.26 | $TiO_2$ absent | 0.024 | 129 |
| 0.003 | 66.00 | $TiO_2$ present | 0.003 | 66.07 | $TiO_2$ present | 0.005 | 130 |
| 0.103 | 62.78 | do | 0.103 | 62.82 | do | 0.164 | 131 |
| 0.017 | 65.14 | do | 0.017 | 65.19 | do | 0.026 | 132 |
| 0.041 | 34.81 | $TiO_2$ absent | 0.041 | 34.85 | $TiO_2$ absent | 0.118 | 133 |
| 0.710 | 44.22 | do | 0.712 | 44.32 | do | 1.606 | 134 |
| 0.665 | 39.88 | do | 0.668 | 40.06 | do | 1.668 | 135 |
| 0.554 | 45.73 | do | 0.555 | 45.81 | do | 1.211 | 136 |
| 0.640 | 46.79 | do | 0.641 | 46.86 | do | 1.368 | 137 |
| 1.116 | 43.76 | do | 1.119 | 43.87 | do | 2.550 | 138 |
| 0.753 | 42.90 | do | 0.758 | 43.16 | do | 1.755 | 139 |
| 0.693 | 40.40 | do | 0.705 | 41.10 | do | 1.715 | 140 |
| 0.328 | 40.27 | do | 0.332 | 40.80 | do | 0.815 | 141 |
| 0.248 | 21.85 | do | 0.249 | 21.95 | do | 1.135 | 142 |
| 0.481 | 42.25 | do | 0.482 | 42.35 | do | 1.138 | 143 |
| 0.531 | 40.73 | do | 0.532 | 40.83 | do | 1.304 | 144 |
| 0.578 | 41.46 | do | 0.580 | 41.60 | do | 1.394 | 145 |
| 0.471 | 38.36 | do | 0.472 | 38.46 | do | 1.254 | 146 |
| 1.188 | 42.18 | do | 1.189 | 42.18 | do | 2.698 | 147 |
| 0.285 | 46.32 | do | 0.285 | 46.38 | do | 0.615 | 148 |
| 0.190 | 41.92 | do | 0.190 | 42.04 | do | 0.319 | 149 |
| 0.204 | 40.40 | do | 0.206 | 40.87 | do | 0.509 | 150 |
| 0.226 | 44.35 | do | 0.228 | 44.75 | do | 0.509 | 151 |
| 0.214 | 46.46 | do | 0.215 | 46.65 | do | 0.461 | 152 |
| 0.115 | 48.36 | do | 0.115 | 48.48 | do | 0.238 | 153 |
| 0.212 | 36.78 | do | 0.212 | 36.85 | do | 0.576 | 154 |
| 0.156 | 54.16 | do | 0.156 | 54.28 | do | 0.288 | 155 |
| 0.009 | 56.72 | do | 0.009 | 56.75 | do | 0.016 | 156 |

NORTH CAROLINA.

| | | | | | | | |
|---|---|---|---|---|---|---|---|
| 0.005 | 49.83 | | 0.005 | 49.84 | | 0.010 | 1 |
| 0.900 | 47.99 | | 0.900 | 48.21 | | 1.875 | 2 |
| 1.085 | 46.70 | | 1.093 | 47.04 | | 2.323 | 3 |
| 0.049 | 49.90 | | 0.050 | 50.61 | | 0.098 | 4 |
| 0.016 | 37.31 | | 0.016 | 37.34 | | 0.043 | 5 |
| 0.312 | 34.96 | Specific gravity, 3.448 | 0.313 | 35.10 | | 0.892 | 6 |
| 0.017 | 21.25 | | 0.017 | 21.38 | | 0.080 | 7 |
| 0.018 | 25.75 | $TiO_2$ present; specific gravity, 3.273 | 0.018 | 25.78 | $TiO_2$ present | 0.070 | 8 |
| 0.068 | 20.33 | | 0.068 | 20.72 | | 0.334 | 9 |
| 0.390 | 57.23 | S 0.263 p. ct. Complete analysis | 0.400 | 58.76 | S 0.270 p. ct. | 0.681 | 10 |

TABLE 25.—*Partial analyses of iron ores*—Continued.

NORTH CAROLINA—Continued.

| | Chemist. | Sampler. | Remarks. | Kind of ore. | Number. | Name and location of mine. |
|---|---|---|---|---|---|---|
| 11 | Pitman | Willis | From face of very compact vein | Limonite | 159 | Opening No. 10, Ore Hill, Chatham county. |
| 12 | do | do | From face of ore in old tunnel | Hematite | 160 | Opening No. 4, Ore Hill, Chatham county. |
| 13 | do | do | From bottom of shaft No. 1 | do | 164 | Smith, Lockville, Chatham county |
| 14 | do | do | From bed exposed in 3 pits | do | 163 | "Cole" mine, near Sandford, Moore county. |
| 15 | do | do | From 5 tons of ore from drift 70 feet below surface. | Magnetite | 165 | Dannemora, near Brown's Summit, Rockingham county. |
| 16 | do | do | Fine ore (screenings) from same shaft | do | 166 | do |
| 17 | do | do | From fragments near the Sargent shaft | do | 167 | Sargent's shaft, Tuscarora iron works, Guilford county. |
| 18 | do | do | From fragments near old pits | Limonite | 404 | Propst's openings, near Hickory, Burke county. |
| 19 | do | do | From a few fragments of ore near old pit | Magnetite | 168 | Hard Ore bank, near Danbury, Stokes county. |
| 20 | do | do | From tunnel No. 1, 15 feet below surface | Magnetite (disseminated). | 169 | Pepper bank, near Danbury, Stokes county. |
| 21 | do | do | From 2 tons of ore near old pit | Magnetite | 170 | Roger's bank, near Danbury, Stokes county. |
| 22 | do | do | From bed of ore exposed in trench | do | 170 | Nelson's bank, near Danbury, Stokes county. |
| 23 | do | do | From surface fragments north of trench | do | 180 | do |
| 24 | do | do | From surface fragments near very old trenches. | Limonite | 181 | Outcrop near Danbury, Stokes county. |
| 25 | do | do | From upper vein of ore just above water-level | Magnetite | 171 | Ferris or Hinchum bank, Hyatt's forge, Surry county. |
| 26 | do | do | From lower vein of ore at water-level | do | 172 | do |
| 27 | do | do | Stamped and washed ore | do | 173 | do |
| 28 | do | do | From specimens mined 100 feet from shaft | do | 174 | do |
| 29 | do | do | From numerous small shafts | do | 175 | Hyatt's bank, Bull Run creek, Surry county. |
| 30 | do | do | Stamped and washed ore | do | 176 | do |
| 31 | do | do | From 3-inch vein (lead) | do | 177 | Williams bank, near Rockford, Surry county. |
| 32 | do | do | From pile of ore at mine | do | 178 | Poplar Branch bank, Rockford, Surry county. |
| 33 | do | do | From 4 tons of ore near shaft | do | 182 | Killian, near Lincolnton, Lincoln county. |
| 34 | do | do | From 3-foot vein at depth of 20 feet | do | 183 | Forney bank, near Lincolnton, Lincoln county. |
| 35 | do | do | From ore mined in shaft near water-level | Magnetite and hematite. | 184 | Big bank, near Lincolnton, Lincoln county. |
| 36 | do | do | From old pile of ore near pump-shaft | Magnetite | 185 | Costner bank, near King's mountain, Gaston county. |
| 37 | do | do | From 500 pounds of "flint" thrown aside as worthless. | do | 186 | do |
| 38 | do | do | From numerous lumps near old pits | do | 187 | Ellison bank, near King's mountain, Gaston county. |
| 39 | do | do | From 15 tons of ore near cut | Limonite | 188 | Mine Mountain, near King's mountain, Gaston county. |
| 40 | do | do | From 5 tons of ore near opening | do | 189 | do |
| 41 | do | do | From 2 tons of ore from shaft | do | 190 | Ormond bank, near King's mountain, Gaston county. |
| 42 | do | do | From 20 tons of "gray ore" | Magnetite | 191 | Yellow Ridge, south end, near King's mountain, Gaston county. |
| 43 | do | do | From fragments of ore from western side of vein. | do | 192 | do |
| 44 | do | do | From fragments of ore near test pit and whim shaft. | do | 193 | Yellow Ridge, north end, King's mountain, Gaston county. |
| 45 | do | do | From outcrop of vein 2½ feet thick | Magnetite and hematite. | 194 | Opening, Crowder's mountain, Gaston county. |
| 46 | do | do | From 1 ton of ore near old trench | Limonite | 195 | do |
| 47 | do | do | From 10-foot vein in main shaft | Specular | 402 | Chapel Hill, Chapel Hill, Orange county |
| 48 | do | do | From extreme northern shaft | do | 403 | do |
| 49 | do | do | From outcrop in bluff | Magnetite | 405 | Curtis, Yadkin river, near Patterson, Caldwell county. |
| 50 | do | do | From outcrop of thin veins in slate | Specular | 406 | Ramsours, near head of Dennis creek, Watauga county. |
| 51 | do | do | Pure magnetite from near southern end of workings. | Magnetite | 407 | Cranberry, Big Yellow mountain, Mitchell county. |
| 52 | do | do | Magnetite with pyroxene from same opening | do | 408 | do |
| 53 | do | do | Magnetite with epidote from opening 100 yards northeast of the above. | do | 409 | do |
| 54 | do | do | Coarsely crystalline pyroxene from same opening as Nos. 407 and 408. | do | 410 | do |
| 55 | do | do | From small pile of ore at mine | do | 411 | Wilder's, Iron mountain, Greasy creek, Mitchell county. |
| 56 | do | do | Across stope in cut | do | 412 | Big Ivy bank, Big Ivy creek, Madison county. |
| 57 | do | do | do | Limonite | 413 | Morse's property, Valley River valley, Cherokee county. |
| 58 | do | do | From stope; "hard ore" | do | 414 | Tomotla, 1st range, Valley River valley, Cherokee county. |
| 59 | do | do | From near top of vein in one of the openings | do | 415 | "Section 6", 1st range, Valley River valley, Cherokee county. |

TABLE 25.—*Partial analyses of iron ores*—Continued.

NORTH CAROLINA—Continued.

| NATURAL ORE. | | | DRIED ORE. | | | P. ratio. | |
|---|---|---|---|---|---|---|---|
| P. | Fe. | Miscellaneous. | P. | Fe. | Miscellaneous. | | |
| *P. cent.* | *P. cent.* | | *P. cent.* | *P. cent.* | | *P. cent.* | |
| 0.232 | 41.71 | | 0.235 | 42.20 | | 0.556 | 11 |
| 0.248 | 44.99 | Specific gravity, 3.607 | 0.252 | 45.70 | | 0.551 | 12 |
| 0.593 | 43.02 | $TiO_2$ present; specific gravity, 3.776 | 0.601 | 43.56 | $TiO_2$ present | 1.380 | 13 |
| 0.313 | 48.67 | | 0.318 | 49.52 | | 0.643 | 14 |
| 0.023 | 48.31 | S 0.089 p. ct.; specific gravity, 4.453. Complete analysis. | 0.023 | 48.41 | S 0.089 p. ct | 0.048 | 15 |
| 0.001 | 46.89 | Mn. trace; $TiO_2$ present; specific gravity, 3.829 | 0.001 | 49.41 | Mn. trace; $TiO_2$ present | 0.002 | 16 |
| 0.005 | 53.20 | Mn. trace; $TiO_2$ present; specific gravity, 4.667 | 0.005 | 53.20 | Mn. trace; $TiO_2$ present | 0.009 | 17 |
| 1.357 | 54.84 | | 1.385 | 55.98 | | 2.474 | 18 |
| 0.000 | 56.04 | Specific gravity, 4.359 | 0.000 | 56.04 | | 0.000 | 19 |
| 0.033 | 43.92 | Specific gravity, 3.774 | 0.033 | 44.08 | | 0.075 | 20 |
| 0.001 | 58.26 | S 0.179 p. ct.; specific gravity, 4.519. Complete analysis. | 0.001 | 58.30 | S 0.179 p. ct | 0.002 | 21 |
| 0.040 | 39.70 | Specific gravity, 3.443 | 0.040 | 39.87 | | 0.101 | 22 |
| 0.015 | 44.45 | Mn. present; specific gravity, 3.907 | 0.015 | 44.64 | Mn. present | 0.034 | 23 |
| 0.690 | 47.76 | $TiO_2$ present; specific gravity, 3.577 | 0.701 | 48.50 | $TiO_2$ present | 1.442 | 24 |
| 0.094 | 48.02 | S 0.106 p. ct.; Mn. present; specific gravity, 3.842 | 0.095 | 48.46 | S 0.107 p. ct.; Mn. present | 0.196 | 25 |
| 0.073 | 60.41 | S 0.112 p. ct.; Mn. trace; specific gravity, 4.323 | 0.074 | 61.02 | S 0.113 p. ct.; Mn. trace | 0.121 | 26 |
| 0.056 | 67.10 | S 0.133 p. ct.; Mn. present; specific gravity, 4.865 | 0.056 | 67.30 | S 0.133 p. ct.; Mn. present | 0.083 | 27 |
| 0.051 | 60.16 | S 1.956 p. ct.; Mn. trace; specific gravity, 4.305 | 0.051 | 60.73 | S 1.975 p. ct.; Mn. trace | 0.085 | 28 |
| 0.049 | 38.76 | Specific gravity, 3.713 | 0.049 | 38.80 | | 0.126 | 29 |
| 0.033 | 63.30 | Specific gravity, 4.718 | 0.033 | 63.34 | | 0.052 | 30 |
| 0.022 | 45.28 | Specific gravity, 3.901 | 0.022 | 45.47 | | 0.049 | 31 |
| 0.029 | 56.08 | Specific gravity, 4.336 | 0.029 | 56.21 | | 0.052 | 32 |
| 0.036 | 64.92 | Specific gravity, 4.695 | 0.036 | 65.25 | | 0.055 | 33 |
| 0.009 | 64.96 | $TiO_2$ present; specific gravity, 4.745 | 0.009 | 65.16 | $TiO_2$ present | 0.014 | 34 |
| 0.013 | 58.38 | S 0.086 p. ct.; specific gravity, 4.495. Complete analysis. | 0.013 | 58.56 | S 0.086 p. ct | 0.022 | 35 |
| 0.002 | 51.75 | Specific gravity, 4.179 | 0.002 | 52.00 | | 0.004 | 36 |
| 0.004 | 44.82 | Specific gravity, 3.935 | 0.004 | 44.90 | | 0.009 | 37 |
| 0.016 | 54.61 | Specific gravity, 4.440 | 0.016 | 54.71 | | 0.029 | 38 |
| 0.009 | 61.06 | S 0.090 p. ct.; specific gravity, 4.180. Complete analysis. | 0.009 | 61.20 | S 0.090 p. ct | 0.015 | 39 |
| 0.005 | 58.37 | S 0.112 p. ct.; specific gravity, 4.391. Complete analysis. | 0.005 | 58.73 | S 0.113 p. ct | 0.009 | 40 |
| 0.092 | 65.82 | Mn. present; specific gravity, 4.748 | 0.092 | 66.03 | Mn. present | 0.140 | 41 |
| 0.009 | 57.64 | S 0.441 p. ct.; specific gravity, 4.388 | 0.009 | 57.80 | S 0.441 p. ct | 0.016 | 42 |
| 0.010 | 57.43 | S 0.101 p. ct.; specific gravity, 4.311 | 0.010 | 57.49 | S 0.101 p. ct | 0.017 | 43 |
| 0.030 | 59.24 | Specific gravity, 4.434 | 0.030 | 59.35 | | 0.051 | 44 |
| 0.020 | 50.39 | $TiO_2$ present; specific gravity, 4.306 | 0.020 | 50.50 | $TiO_2$ present | 0.040 | 45 |
| 0.004 | 55.17 | Specific gravity, 3.790 | 0.621 | 50.72 | | 1.095 | 46 |
| 0.057 | 37.91 | S 0.153 p. ct.; specific gravity, 3.551. Complete analysis. | 0.057 | 37.94 | S 0.153 p. ct | 0.150 | 47 |
| 0.170 | 42.64 | $TiO_2$ present; specific gravity, 3.719 | 0.170 | 42.69 | $TiO_2$ present | 0.399 | 48 |
| 0.076 | 25.73 | $TiO_2$ 38.81 p. ct | 0.076 | 25.76 | $TiO_2$ 38.81 p. ct | 0.295 | 49 |
| 0.012 | 44.45 | | 0.012 | 44.45 | | 0.027 | 50 |
| 0.004 | 64.64 | S 0.115 p. ct.; specific gravity, 4.753. Complete analysis. | 0.004 | 64.87 | S 0.115 p. ct | 0.006 | 51 |
| 0.007 | 44.08 | S 0.128 p. ct | 0.007 | 44.29 | S 0.129 p. ct | 0.016 | 52 |
| 0.010 | 32.37 | S 0.128 p. ct.; specific gravity, 3.637. Complete analysis. | 0.010 | 32.49 | S 0.128 p. ct | 0.031 | 53 |
| 0.009 | 24.01 | Specific gravity, 3.353 | 0.009 | 24.53 | | 0.037 | 54 |
| 0.012 | 63.36 | Specific gravity, 4.964 | 0.012 | 63.41 | | 0.019 | 55 |
| 0.005 | 42.95 | | 0.005 | 42.97 | | 0.012 | 56 |
| 0.021 | 57.84 | Specific gravity, 3.806 | 0.021 | 58.42 | | 0.036 | 57 |
| 0.291 | 55.85 | Specific gravity, 3.779 | 0.294 | 56.42 | | 0.521 | 58 |
| 0.387 | 58.25 | S 0.160 p. ct | 0.391 | 58.80 | S 0.161 p. ct | 0.664 | 59 |

TABLE 25.—*Partial analyses of iron ores*—Continued.

NORTH CAROLINA—Continued.

| | Chemist. | Sampler. | Remarks. | Kind of ore. | Number. | Name and location of mine. |
|---|---|---|---|---|---|---|
| 60 | Pitman | Willis | From portion of vein in old cut | Limonite | 416 | Montieth's, 3d range, near Murphy, Cherokee county. |
| 61 | do | do | From a few pieces by side of old pit | do | 417 | Little's, 2d range, near Murphy, Cherokee county. |
| 62 | do | do | From small pile of ore from new pit | Magnetite | 941 | Hampton's bank, Horse creek, Ashe county. |
| 63 | do | do | From surface fragments near old pits | do | 942 | "Joe Graybeals", Horse creek, Ashe county. |
| 64 | do | do | From upper part of vein | do | 943 | Poison Branch bank, Helton creek, Ashe county. |
| 65 | do | do | From lower part of vein | do | 944 | do |
| 66 | do | do | Across stope | do | 945 | N. B. Ballow's bank, Helton creek, Ashe county. |
| 67 | do | do | From outcrop; "gossan" | Limonite | 946 | Johnson's ridge of Elk Knob, Ashe county. |

OHIO.

| | | | | | | |
|---|---|---|---|---|---|---|
| 1 | King | Willis | From stock pile at Monitor furnace | "Red kidney" (C. M.) | 1208 | Lawrence furnace, Hanging Rock, Lawrence county. |
| 2 | do | do | From 2 tons of ore at drift | "Gray limestone" "kidney" (C. M.). | 1209 | Hecla furnace, Hanging Rock, Lawrence county. |
| 3 | do | do | From 5 tons of ore at drift | do | 1210 | do |
| 4 | do | do | Selected lumps from stock pile at Hecla furnace. | "Yellow kidney" (C. M.). | 1211 | do |
| 5 | do | do | From wagon-load of ore at Hecla furnace | "Limestone ore" (C. M.). | 1212 | do |
| 6 | do | do | From 10 tons of ore at Hecla furnace | Mixed roasted ore (C. M.). | 1213 | do |
| 7 | do | do | From 2 tons of ore at furnace | Hematite, "black-band" (C. M.). | 1220 | Peterson's ore, Olive furnace, near Webster, Lawrence county. |
| 8 | do | do | From 1 ton of ore at furnace | do | 1221 | do |
| 9 | do | do | Selected lumps from 15 tons of ore near drift from bottom vein. | "Gray carbonate" (C. M.). | 1228 | Davis ore, Jackson, Lawrence county. |
| 10 | do | do | Selected lumps from 15 tons of ore near drift from 2d vein. | do | 1229 | do |
| 11 | do | do | Selected lumps from 15 tons of ore near drift from 3d vein. | do | 1230 | do |
| 12 | do | do | Selected lumps from 15 tons of ore near drift from 4th vein. | do | 1231 | do |
| 13 | do | do | Selected lumps from 15 tons of ore near drift from 5th vein. | do | 1232 | do |
| 14 | do | do | From pile of ore at drift | "Red Hudson" (C. M.). | 1235 | Hudson drift, near Monroe furnace, Lawrence county. |
| 15 | do | do | do | "Gray Hudson" (C. M.). | 1236 | do |
| 16 | do | do | From car-load of ore at furnace | "Red limestone" (C. M.). | 1237 | Washington furnace, Lawrence county. |
| 17 | do | do | From wagon-load of ore at furnace | "Gray limestone" (C. M.). | 1238 | do |
| 18 | do | do | Selected lumps from stock pile at furnace | "Red limestone" "kidney" (C. M.). | 1239 | do |
| 19 | do | do | do | "Gray limestone" (C. M.). | 1240 | do |
| 20 | do | do | From stock pile at furnace | Mixed roasted (C. M.). | 1241 | do |
| 21 | do | do | Selected lumps from stock pile at furnace | "Red limestone" "kidney" (C. M.). | 1222 | Monroe furnace, Jackson county |
| 22 | do | do | do | "Hematite kidney" (C. M.). | 1223 | do |
| 23 | do | do | do | "Top hill kidney" (C. M.). | 1224 | do |
| 24 | do | do | do | "Block ore" (C. M.) | 1225 | do |
| 25 | do | do | do | do | 1226 | do |
| 26 | do | do | From stock pile at furnace | Mixed roasted ore (C. M.). | 1227 | do |
| 27 | do | do | do | "Red limestone" (C. M.). | 1233 | do |
| 28 | do | do | do | "Gray limestone" (C. M.). | 1234 | do |
| 29 | do | do | From car-load of ore at Star furnace | Earthy limonite (C. M.) | 1242 | Ray's ore, Byer's station, Jackson county. |
| 30 | do | do | From 500 tons of ore at furnace | "Block ore" (C. M.) | 1243 | Milton furnace, near Hamden, Jackson county. |
| 31 | do | do | From stock pile at furnace | do | 1244 | do |
| 32 | do | do | From 10 tons of ore at drift | "Red limestone" (C. M.). | 1245 | Swaringen farm, near Milton, Jackson county. |
| 33 | do | do | Selected lumps from 10 tons of ore at drift | Soft "red limestone" (C. M.). | 1246 | do |
| 34 | do | do | From 15 tons of ore at stripping | Block ore (C. M.) | 1247 | do |
| 35 | do | do | Selected lumps from stock pile | "Fine block" (C. M.). | 1214 | Scioto furnace, Scioto county |
| 36 | do | do | do | "Big red block" (C. M.). | 1215 | do |
| 37 | do | do | do | "Little sand block" (C. M.). | 1216 | do |
| 38 | do | do | do | "Big sand block" (C. M.). | 1217 | do |
| 39 | do | do | do | "Little red block" (C. M.). | 1218 | do |
| 40 | do | do | do | "Flag ore" (C. M.) | 1219 | do |
| 41 | do | do | From 500 tons of ore at furnace | Limonite (C. M.) "Limestone ore". | 1248 | Gore furnace, Hocking county |
| 42 | do | do | From stock pile at furnace (broken and screened, ready for use). | Limonite (C. M.) (roasted), "Limestone ore" | 1249 | do |

TABLE 25.—*Partial analyses of iron ores*—Continued.

NORTH CAROLINA—Continued.

| NATURAL ORE. | | | DRIED ORE. | | | P. ratio. | |
|---|---|---|---|---|---|---|---|
| P. | Fe. | Miscellaneous. | P. | Fe. | Miscellaneous. | | |
| *P. cent.* | *P. cent.* | | *P. cent.* | *P. cent.* | | *P. cent.* | |
| 0.691 | 56.46 | Specific gravity, 3.805 | 0.702 | 57.33 | | 1.224 | 60 |
| 0.994 | 51.94 | | 1.010 | 52.76 | | 1.014 | 61 |
| 0.019 | 51.66 | | 0.019 | 52.28 | | 0.087 | 62 |
| 0.009 | 63.80 | | 0.009 | 64.04 | | 0.014 | 63 |
| 0.041 | 62.78 | S 1.000 p. ct | 0.041 | 63.23 | S 1.007 p. ct | 0.065 | 64 |
| 0.016 | 50.63 | S 0.076 p. ct | 0.016 | 50.77 | S 0.076 p. ct | 0.032 | 65 |
| 0.018 | 48.92 | | 0.018 | 49.06 | | 0.037 | 66 |
| 0.029 | 26.96 | Cu. 0.34 p. ct | 0.029 | 27.20 | Cu. 0.34 p. ct | 0.108 | 67 |

OHIO.

| | | | | | | | |
|---|---|---|---|---|---|---|---|
| 0.155 | 40.59 | | 0.157 | 41.15 | | 0.382 | 1 |
| 0.049 | 34.27 | $TiO_2$ absent | 0.049 | 34.39 | $TiO_2$ absent | 0.143 | 2 |
| 0.150 | 41.40 | do | 0.152 | 41.90 | do | 0.362 | 3 |
| 0.317 | 32.97 | | 0.320 | 33.34 | | 0.961 | 4 |
| 0.144 | 33.29 | Mn. present; $TiO_2$ trace | 0.144 | 33.39 | Mn. present; $TiO_2$ trace | 0.453 | 5 |
| 0.154 | 42.01 | | 0.154 | 43.00 | | 0.359 | 6 |
| 0.568 | 45.68 | $TiO_2$ absent | 0.597 | 47.98 | $TiO_2$ absent | 1.240 | 7 |
| 0.652 | 46.17 | do | 0.678 | 48.05 | do | 1.410 | 8 |
| 0.429 | 35.17 | | 0.430 | 35.25 | | 1.220 | 9 |
| 0.270 | 34.07 | | 0.273 | 34.47 | | 0.792 | 10 |
| 0.249 | 23.99 | | 0.250 | 24.11 | | 1.040 | 11 |
| 0.344 | 32.03 | | 0.345 | 32.13 | | 1.070 | 12 |
| 0.216 | 17.97 | | 0.217 | 18.02 | | 1.200 | 13 |
| 0.279 | 53.82 | | 0.285 | 54.94 | | 0.518 | 14 |
| 0.172 | 23.68 | | 0.172 | 23.72 | | 0.726 | 15 |
| 0.199 | 54.89 | | 0.204 | 56.24 | | 0.363 | 16 |
| 0.211 | 32.59 | | 0.212 | 32.70 | | 0.647 | 17 |
| 0.156 | 39.49 | | 0.157 | 39.78 | | 0.995 | 18 |
| 0.074 | 34.62 | | 0.074 | 34.71 | | 0.214 | 19 |
| 0.307 | 50.93 | | 0.307 | 51.21 | | 0.663 | 20 |
| 0.145 | 49.32 | Mn. present; $TiO_2$ trace | 0.147 | 50.03 | Mn. present; $TiO_2$ trace | 0.294 | 21 |
| 0.167 | 43.23 | do | 0.171 | 44.16 | do | 0.386 | 22 |
| 0.479 | 31.66 | $TiO_2$ absent | 0.484 | 31.29 | $TiO_2$ absent | 1.510 | 23 |
| 0.320 | 41.85 | | 0.325 | 42.54 | | 0.765 | 24 |
| 0.333 | 42.26 | | 0.340 | 43.12 | | 0.788 | 25 |
| 0.345 | 37.94 | Mn. present; $TiO_2$ absent | 0.346 | 38.09 | Mn. present; $TiO_2$ absent | 0.909 | 26 |
| 0.240 | 47.23 | | 0.244 | 48.02 | | 0.508 | 27 |
| 0.151 | 36.56 | | 0.152 | 36.78 | | 0.413 | 28 |
| 0.377 | 30.98 | | 0.381 | 31.31 | | 1.220 | 29 |
| 0.250 | 31.56 | | 0.251 | 31.74 | | 0.792 | 30 |
| 0.197 | 46.12 | | 0.199 | 46.57 | | 0.427 | 31 |
| 0.127 | 51.46 | | 0.130 | 52.56 | | 0.247 | 32 |
| 0.072 | 51.97 | | 0.073 | 53.00 | | 0.139 | 33 |
| 0.665 | 43.63 | | 0.670 | 43.98 | | 1.520 | 34 |
| 0.211 | 49.71 | | 0.214 | 50.44 | | 0.424 | 35 |
| 0.579 | 40.42 | | 0.586 | 40.89 | | 1.430 | 36 |
| 0.252 | 36.19 | $TiO_2$ absent | 0.256 | 36.75 | $TiO_2$ absent | 0.696 | 37 |
| 0.420 | 39.73 | | 0.426 | 40.29 | | 1.060 | 38 |
| 0.515 | 39.61 | | 0.529 | 40.70 | | 1.300 | 39 |
| 0.130 | 34.43 | | 0.131 | 34.62 | | 0.378 | 40 |
| 0.211 | 44.34 | | 0.216 | 45.46 | | 0.476 | 41 |
| 0.186 | 39.71 | | 0.188 | 40.09 | | 0.468 | 42 |

TABLE 25.—*Partial analyses of iron ores*—Continued.

OHIO—Continued.

| | Chemist. | Sampler. | Remarks. | Kind of ore. | Number. | Name and location of mine. |
|---|---|---|---|---|---|---|
| 43 | King | Willis | From 9 tons of ore at furnace, said to be poorer than average. | "Blackband" (C. M.) | 1250 | Orbiston furnace, Athens county |
| 44 | do | do | From 200 tons of ore at furnace | Limonite (C. M.) "Buchtel ore". | 1251 | do |
| 45 | do | do | From 5 car-loads of ore at Creola | Limonite (C. M.) "Dunkel ore". | 1252 | Dunkel ore, Creola furnace, Vinton county. |
| 46 | do | do | From ½ car-load of ore at furnace | Carbonate? (C. M.) | 1253 | Eagle furnace, Radcliff district, Vinton county. |
| 47 | do | do | From 2 tons of ore at drift | Hematite (C. M.) | 1254 | Burline banks, Eagle furnace, Vinton county. |
| 48 | do | do | From 4 car-loads of ore at Eagle furnace | Limonite (C. M.) | 1255 | Burline banks and Tarr Farm furnace, Vinton county. |
| 49 | do | do | From 1 car-load of ore at Eagle furnace | Carbonate oolitic (C. M.). | 1256 | do |
| 50 | do | do | From 500 tons of ore at Double XX furnace | Limonite (C. M.) (roasted). | 1257 | "Pat. Moore farm", Shawnee furnace, Perry county. |
| 51 | do | do | From 50 tons of ore at furnace | Blackband (C. M.) | 1258 | Iron point, New York furnace, Shawnee, Perry county. |
| 52 | do | do | do | Limonite (C. M.) | 1259 | do |
| 53 | do | do | From 100 tons of ore at furnace | Blackband (C. M.) | 1260 | Bowman farm, near Shawnee, Perry county. |
| 54 | do | do | From 3 tons of ore at mine | Limonite (C. M.) | 1261 | do |
| 55 | do | do | From unroasted lumps in 500 tons of roasted ore. | do | 1262 | Donnelly bank, Moscahala, Perry county. |
| 56 | do | do | From unroasted lumps in pile of roasted ore | do | 1263 | do |
| 57 | do | do | From 100 tons of ore at Junction City | Carbonate (C. M.) | 1264 | J. McLaughlin's drift, Junction city, Perry county. |
| 58 | do | do | From 1 ton of ore at Junction City | Carbonate kidney (C. M.). | 1265 | do |
| 59 | do | do | From wagon-load of ore at Frazeysburg | Limonite (C. M.) | 1266 | Goff bank, Frazeysburg, Muskingum county. |
| 60 | do | do | From 2 wagon-loads of ore at Frazeysburg | do | 1267 | McGinnis bank, Frazeysburg, Muskingum county. |
| 61 | do | do | From 1 wagon-load of ore at Frazeysburg | Carbonate (C. M.) | 1268 | Millstead bank, Frazeysburg, Muskingum county. |
| 62 | do | do | From 3 tons of ore at mine | Limonite (C. M.) | 1269 | McDonald's bank, Frazeysburg, Muskingum county. |
| 63 | do | do | From 10 tons of ore at shaft | "Blackband" (C. M.) (roasted). | 1291 | Todd, Wells & Co., Mineral ridge, Columbiana county. |
| 64 | do | do | From 50 tons of ore at mine | "Blackband" (C. M.) | 1292 | do |
| 65 | do | do | From 100 tons of ore at shaft | do | 1293 | John Henry, Mineral ridge, Columbiana county. |
| 66 | do | do | From 100 tons of ore at mine | "Blackband" (C. M.) (roasted). | 1294 | do |
| 67 | do | do | From 100 tons of raw ore at mine | Limonite and carbonate (C M.). | 1295 | Cherry Valley Iron Company, near New Lisbon, Columbiana county. |
| 68 | do | do | From 25 tons roasted ore at mine | "Kidney" (C. M.) (roasted). | 1296 | do |
| 69 | do | do | From face of ore 75 paces long | Carbonate and limonite (C. M.). | 1297 | William Donnan's, near New Lisbon, Columbiana county. |
| 70 | do | do | From 50 tons of ore at mine | Kidney (C. M.) (roasted). | 1298 | do |
| 71 | do | do | From 200 tons of ore at mine | Carbonate and limonite (C. M.). | 1299 | A. G. Smith's, near New Lisbon, Columbiana county. |
| 72 | do | do | From 1 car-load of ore screened and ready for shipment. | Kidney (C. M.) (roasted). | 1300 | do |
| 73 | do | do | From pieces near old pits | Carbonate and limonite (C. M.). | 1270 | Near Zoar, Tuscarawas county |
| 74 | do | do | From ½ ton of ore at small opening near canal | do | 1271 | Heit's farm, near Dover, Tuscarawas county. |
| 75 | do | do | From a few kidneys dug from bank | do | 1272 | Winkler's farm, near Dover, Tuscarawas county. |
| 76 | do | do | From 200 tons of ore at Dover furnace | Carbonate with limonite (C. M.). | 1273 | Anman farm, near Dover, Tuscarawas county. |
| 77 | do | do | From face of ore in pit | Limonite (C. M.) "mountain ore". | 1274 | Groebel farm, near Dover, Tuscarawas county. |
| 78 | do | do | From 300 tons of ore at mine | "Blackband" (C. M.) | 1275 | Bähler's farm, near Dover, Tuscarawas county. |
| 79 | do | do | From 200 tons of ore from same opening as No. 1275. | "Blackband" (C. M.) (roasted). | 1276 | do |
| 80 | do | do | From 200 tons of ore from drift | do | 1277 | do |
| 81 | do | do | From 50 tons of ore from same drift as No. 1277 | Carbonate (C. M.) "mountain ore". | 1278 | do |
| 82 | do | do | From 10 tons of ore at mine | Limonite (C. M.) "mountain ore". | 1279 | do |
| 83 | do | do | From face of ore 5 feet thick in mine | Blackband (C. M.) | 1280 | Dover Furnace hill, Fairfield, Tuscarawas county. |
| 84 | do | do | From 5 tons of ore from same drift as No. 1280 | Blackband (C. M.) (roasted). | 1281 | do |
| 85 | do | do | From 50 tons of ore at mine | do | 1282 | Hugh Kelley's, Fairfield, Tuscarawas county. |
| 86 | do | do | From 50 tons of ore from same opening as No. 1285. | "Mountain ore" (C. M.) (roasted). | 1283 | do |
| 87 | do | do | From 100 tons of ore at mine | "Blackband" (C. M.) | 1284 | do |
| 88 | do | do | From 50 tons of ore at mine (see No. 1283) | "Mountain ore" (C. M.). | 1285 | do |
| 89 | do | do | From 100 tons of ore from open cut | "Blankband" (C. M.) | 1286 | Dye bank, near Wolf station, Tuscarawas county. |
| 90 | do | do | From 50 tons of ore from drift | "Blackband" (C. M.) (roasted). | 1287 | do |
| 91 | do | do | From face where bed is 2 feet 8 inches thick | "Blackband" (C. M.) | 1288 | do |
| 92 | do | do | From face where bed is 5 feet 2 inches thick | do | 1289 | Wyan's farm, Wolf station, Tuscarawas county. |
| 93 | do | do | From 100 tons of ore from same bed as No. 1289 | "Blackband" (C. M.) (roasted). | 1290 | do |

TABLE 25.—*Partial analyses of iron ores*—Continued

OHIO—Continued.

| NATURAL ORE. | | | DRIED ORE. | | | P. ratio. | |
|---|---|---|---|---|---|---|---|
| P. | Fe. | Miscellaneous. | P. | Fe. | Miscellaneous. | | |
| *P. cent.* | *P. cent.* | | *P. cent.* | *P. cent.* | | *P. cent.* | |
| 0.333 | 35.08 | | 0.340 | 35.84 | | 0.940 | 43 |
| 1.450 | 28.63 | | 1.480 | 29.23 | | 5.065 | 44 |
| 0.174 | 41.62 | | 0.177 | 42.27 | | 0.418 | 45 |
| 0.233 | 35.57 | | 0.234 | 35.60 | | 0.655 | 46 |
| 0.112 | 52.08 | | 0.116 | 54.06 | | 0.215 | 47 |
| 0.205 | 47.50 | | 0.205 | 47.50 | | 0.432 | 48 |
| 0.080 | 34.68 | | 0.082 | 35.33 | | 0.231 | 49 |
| 0.230 | 44.20 | | 0.240 | 44.44 | | 0.540 | 50 |
| 0.288 | 34.41 | | 0.289 | 34.51 | | 0.837 | 51 |
| 1.132 | 46.34 | | 1.148 | 46.98 | | 2.443 | 52 |
| 0.567 | 31.96 | | 0.582 | 32.70 | | 1.774 | 53 |
| 0.884 | 42.78 | | 0.898 | 43.45 | | 2.066 | 54 |
| 3.106 | 34.99 | | 3.207 | 36.14 | | 8.877 | 55 |
| 1.001 | 30.23 | | 1.021 | 30.84 | | 3.311 | 56 |
| 0.144 | 38.73 | | 0.145 | 38.95 | | 0.372 | 57 |
| 0.102 | 36.04 | | 0.102 | 36.81 | | 0.278 | 58 |
| 0.532 | 51.86 | | 0.533 | 52.00 | | 1.026 | 59 |
| 0.281 | 37.70 | | 0.287 | 38.46 | | 0.745 | 60 |
| 0.181 | 32.41 | | 0.183 | 32.70 | | 0.558 | 61 |
| 0.137 | 52.17 | | 0.137 | 52.30 | | 0.263 | 62 |
| 0.224 | 50.62 | | 0.225 | 50.77 | | 0.443 | 63 |
| 0.150 | 30.60 | | 0.152 | 33.33 | | 0.500 | 64 |
| 0.182 | 30.72 | | 0.184 | 31.07 | | 0.592 | 65 |
| 0.398 | 52.52 | | 0.399 | 52.63 | | 0.758 | 66 |
| 0.516 | 38.21 | | 0.521 | 38.55 | | 1.351 | 67 |
| 0.428 | 46.07 | | 0.441 | 47.44 | | 0.929 | 68 |
| 0.468 | 39.77 | | 0.474 | 40.31 | | 1.177 | 69 |
| 0.468 | 48.34 | | 0.471 | 48.63 | | 0.968 | 70 |
| 0.417 | 38.04 | | 0.422 | 38.54 | | 1.096 | 71 |
| 0.370 | 38.55 | | 0.373 | 38.86 | | 0.960 | 72 |
| 0.160 | 26.89 | | 0.161 | 27.10 | | 0.595 | 73 |
| 0.188 | 39.09 | $TiO_2$ absent | 0.190 | 39.50 | $TiO_2$ absent | 0.486 | 74 |
| 0.824 | 40.65 | $TiO_2$ trace | 0.838 | 41.34 | $TiO_2$ trace | 2.027 | 75 |
| 0.184 | 34.15 | | 0.186 | 34.39 | | 0.539 | 76 |
| 0.604 | 32.36 | | 0.620 | 32.24 | | 1.867 | 77 |
| 0.195 | 26.31 | | 0.198 | 26.71 | | 0.741 | 78 |
| 0.350 | 44.07 | $TiO_2$ absent; Mn. present | 0.351 | 44.14 | $TiO_2$ absent; Mn. present | 0.794 | 79 |
| 0.169 | 27.32 | | 0.171 | 27.66 | | 0.619 | 80 |
| 0.705 | 34.68 | $TiO_2$ absent | 0.715 | 35.38 | $TiO_2$ absent | 2.033 | 81 |
| 0.988 | 43.09 | | 1.021 | 44.54 | | 2.293 | 82 |
| 0.171 | 23.95 | | 0.173 | 24.24 | | 0.714 | 83 |
| 0.422 | 40.91 | | 0.422 | 40.95 | | 1.032 | 84 |
| 0.314 | 41.12 | $TiO_2$ absent; Mn. present | 0.315 | 41.25 | $TiO_2$ absent; Mn. present | 0.764 | 85 |
| 0.702 | 45.36 | | 0.704 | 46.46 | | 1.548 | 86 |
| 0.159 | 27.50 | $TiO_2$ absent | 0.160 | 27.75 | $TiO_2$ absent | 0.577 | 87 |
| 0.326 | 29.52 | | 0.328 | 29.66 | | 1.143 | 88 |
| 0.160 | 25.20 | | 0.162 | 25.40 | | 0.635 | 89 |
| 0.264 | 42.18 | Mn. present | 0.264 | 42.21 | Mn. present | 0.626 | 90 |
| 0.161 | 23.90 | do | 0.163 | 24.21 | do | 0.674 | 91 |
| 0.266 | 26.32 | | 0.270 | 26.73 | | 1.011 | 92 |
| 0.312 | 44.48 | | 0.313 | 44.57 | | 0.761 | 93 |

TABLE 25.—*Partial analyses of iron ores*—Continued.

OREGON.

| | Chemist. | Sampler. | Remarks. | Kind of ore. | Number. | Name and location of mine. |
|---|---|---|---|---|---|---|
| 1 | Whitfield | Putnam | From 150 tons of ore at Oswego furnace | Limonite | 1165 | Prosser, Oswego furnace, Clackamas county. |
| 2 | do | do | Selected pieces from pile of ore in stock house at Oswego furnace. | Micaceous variety | 1167 | do |
| 3 | do | do | From 60 tons of ore at Oswego furnace | Limonite | 1166 | Patton, Oswego furnace, Clackamas county. |

PENNSYLVANIA.

| | | | | | | |
|---|---|---|---|---|---|---|
| 1 | Whitfield | Willis | From 40 tons on cars, from along a face 300 feet north and south. | Magnetite | 1401 | Big hill, upper level, Cornwall mines, Lebanon county. |
| 2 | do | do | From 15 tons, loaded for shipment, from south side. | do | 1402 | Big hill, middle level, Cornwall mines, Lebanon county. |
| 3 | do | do | From 5 tons from along face of 150 feet in southwest cut. | do | 1403 | Middle hill, southwest cut, Cornwall mines, Lebanon county. |
| 4 | do | do | From 30 tons, on cars, from along a face of 100 feet east and west. | do | 1404 | Middle hill, center cut, Cornwall mines, Lebanon county. |
| 5 | do | do | Along entire northern face of cut about 300 feet east and west. | do | 1405 | Grassy hill, north face, Cornwall mines, Lebanon county. |
| 6 | do | do | From 50 tons on cars, mined along eastern face of lowest cut about 450 feet north and south. | do | 1406 | Middle hill, eastern face, Cornwall mines, Lebanon county. |
| 7 | do | do | From 5 tons of ore in copper house | do | 1407 | Middle hill, copper ore, Cornwall mines, Lebanon county. |
| 8 | do | do | From about 800 tons at Reading Iron Works | do | 1411 | Fritz island, near Reading, Berks county. |
| 9 | do | do | From 1,200 tons at mine | do | 1413 | Warwick, Boyertown, Berks county |
| 10 | do | do | From 300 tons at mine; "black ore" | do | 1414 | Gabel's mine, Boyertown, Berks county. |
| 11 | do | do | From 1,000 tons at mine; Gabel vein | do | 1415 | do |
| 12 | do | do | From about 100 tons at upper and lower Phœnix inclines. | do | 1416 | Phœnix, Boyertown, Berks county |
| 13 | do | do | From 500 tons at mine, from the Eckert vein | do | 1417 | California, Boyertown, Berks county |
| 14 | do | do | From 500 tons at mine, from the Rhoades vein | do | 1418 | do |
| 15 | do | do | From 10 tons at mine | do | 1419 | Rowes' mine, Barto station, Berks county. |
| 16 | do | do | From 40 tons on cars near the mine | do | 1420 | Wheatfield, near Fritztown, Berks county. |
| 17 | do | do | From 20 tons at mine | do | 1424 | Jones' north shaft, Springfield, Berks county. |
| 18 | do | do | From 10 tons at mine | Magnetite (decomposed). | 1425 | Jones' south shaft, Springfield, Berks county. |
| 19 | do | do | From 5 tons of ore at shaft | Magnetite | 1421 | French creek, shaft No. 1, Knauertown, Chester county. |
| 20 | do | do | From 15 tons at mine | do | 1422 | French creek, shaft No. 2, Knauertown, Chester county. |
| 21 | do | do | From 30 tons at mine | do | 1423 | Hopewell No. 4, Saint Mary's, Chester county. |
| 22 | do | do | From 2 car-loads of ore at Dillsburg | do | 1432 | Bell, Dillsburg, York county |
| 23 | do | do | From 75 tons at the depot at Dillsburg | do | 1433 | Longnecker, Dillsburg, York county |
| 24 | do | do | From 50 tons at the depot at Dillsburg | do | 1434 | Underwood, Dillsburg, York county |

RHODE ISLAND.

| | | | | | | |
|---|---|---|---|---|---|---|
| 1 | Pitman | Willis | From mine | Magnetite | 991 | Iron Hill mine, Cumberland, Providence county. |

SOUTH CAROLINA.

| | | | | | | |
|---|---|---|---|---|---|---|
| 1 | Pitman | Willis | From 1 ton of ore from shaft | Magnetite | 196 | Brockley bank, near Gaffney's, Spartanburgh county. |
| 2 | do | do | From 3 tons of ore from open cut | do | 197 | Red ore opening, near Gaffney's, Spartanburgh county. |
| 3 | do | do | Numerous specimens near old pits and trenches. | do | 199 | Lee bank, near Black's Station, York county. |
| 4 | do | do | From 2 tons of ore mined near surface several years ago. | do | 200 | Plantation bank, Black's Station, York county. |
| 5 | do | do | From 3-foot vein | Magnetite and hematite. | 401 | Silver Mountain bank, Black's Station, York county. |

TENNESSEE.

| | | | | | | |
|---|---|---|---|---|---|---|
| 1 | King | Chauvenet | From stock pile at South Pittsburgh furnaces | Fossil (gravel) | 272 | Green's, Sec. 15, T. 4, R. 2 W., James county. |
| 2 | White | do | From pile at incline on railroad at Green's mine. | Fossil | 276 | do |
| 3 | do | do | From pile at incline on switch at Green's mine. | Fossil (gravel) | 277 | do |
| 4 | King | do | From small pit, 10 feet deep, at mine | Fossil | 273 | Ragon's, T. 4, R. 2 W., James county |
| 5 | White | do | From stock pile of Chattanooga Iron Company, Chattanooga. | do | 283 | Burns, Chattanooga district (Coltewah), James county. |
| 6 | King | do | From stock pile at Wolf's switch | do | 274 | Smith's, T. 4, R. 2 W., Bradley county |
| 7 | White | do | From pile of ore on railroad | do | 275 | Hinch, T. 4, R. 2 W., Bradley county |

TABLE 25.—*Partial analyses of iron ores*—Continued.

OREGON.

| NATURAL ORE. | | | DRIED ORE. | | | P. ratio. | |
|---|---|---|---|---|---|---|---|
| P. | Fe. | Miscellaneous. | P. | Fe. | Miscellaneous. | | |
| *P. cent.* | *P. cent.* | | *P. cent.* | *P. cent.* | | *P. cent.* | |
| 0.660 | 44.71 | $TiO_2$ 0.51 p. ct | 0.700 | 47.01 | $TiO_2$ 0.54 p. ct | 1.400 | 1 |
| 0.392 | 54.19 | | 0.398 | 55.03 | | 0.723 | 2 |
| 0.576 | 45.40 | | 0.609 | 48.02 | | 1.269 | 3 |

PENNSYLVANIA.

| | | | | | | | |
|---|---|---|---|---|---|---|---|
| 0.013 | 49.53 | | 0.013 | 49.68 | | 0.026 | 1 |
| 0.017 | 50.93 | | 0.017 | 51.19 | | 0.033 | 2 |
| 0.011 | 56.67 | | 0.011 | 56.72 | | 0.019 | 3 |
| 0.019 | 44.56 | | 0.019 | 44.76 | | 0.043 | 4 |
| Trace. | 59.74 | | Trace. | 60.07 | | | 5 |
| 0.009 | 53.80 | | 0.009 | 53.95 | | 0.017 | 6 |
| | | Cu 11.62 p. ct.; not analyzed for Fe and P | | | Cu 11.67 p. ct | | 7 |
| 0.020 | 41.84 | | 0.020 | 42.28 | | 0.069 | 8 |
| 0.069 | 45.10 | | 0.069 | 45.15 | | 0.153 | 9 |
| 0.038 | 47.43 | | 0.038 | 47.63 | | 0.080 | 10 |
| 0.039 | 37.73 | | 0.039 | 37.84 | | 0.103 | 11 |
| 0.022 | 48.68 | | 0.022 | 49.03 | | 0.045 | 12 |
| 0.037 | 54.97 | | 0.037 | 55.32 | | 0.067 | 13 |
| 0.045 | 37.57 | | 0.045 | 37.72 | | 0.119 | 14 |
| 0.110 | 54.42 | | 0.110 | 54.52 | | 0.202 | 15 |
| 0.025 | 37.88 | | 0.025 | 38.22 | | 0.066 | 16 |
| 0.027 | 45.26 | | 0.027 | 45.45 | | 0.060 | 17 |
| 0.025 | 51.32 | | 0.025 | 52.24 | | 0.049 | 18 |
| 0.033 | 52.64 | | 0.034 | 53.70 | | 0.083 | 19 |
| 0.040 | 56.13 | | 0.040 | 56.25 | | 0.092 | 20 |
| 0.030 | 57.29 | | 0.030 | 57.94 | | 0.068 | 21 |
| 0.016 | 39.55 | | 0.016 | 39.71 | | 0.040 | 22 |
| 0.016 | 43.63 | | 0.016 | 43.70 | | 0.037 | 23 |
| 0.018 | 44.10 | | 0.018 | 44.23 | | 0.041 | 24 |

RHODE ISLAND.

| | | | | | | | |
|---|---|---|---|---|---|---|---|
| 0.026 | 32.80 | S 0.057 p. ct.; $TiO_2$ 0.35 | 0.026 | 32.84 | S 0.057 p. ct.; $TiO_2$ 0.36 | 0.079 | 1 |

SOUTH CAROLINA.

| | | | | | | | |
|---|---|---|---|---|---|---|---|
| 0.011 | 58.34 | Specific gravity, 4.383 | 0.011 | 58.52 | | 0.019 | 1 |
| 0.172 | 37.79 | Specific gravity, 3.544 | 0.172 | 37.82 | | 0.455 | 2 |
| 0.014 | 52.16 | S 0.127 p. ct.; specific gravity, 4.087 | 0.014 | 52.34 | S 0.127 p. ct | 0.026 | 3 |
| 0.002 | 54.65 | Specific gravity, 4.232 | 0.002 | 54.80 | | 0.004 | 4 |
| 0.180 | 39.24 | $TiO_2$ 36.67 p. ct.; insoluble, 38.51 p. ct.; specific gravity, 3.577. | 0.181 | 39.43 | $TiO_2$ 36.85 p. ct.; insoluble, 38.70 p. ct | 0.459 | 5 |

TENNESSEE.

| | | | | | | | |
|---|---|---|---|---|---|---|---|
| 0.058 | 55.30 | Specific gravity, 4.278 | 0.058 | 55.51 | | 0.105 | 1 |
| 0.153 | 50.69 | Specific gravity, 4.005 | 0.154 | 50.92 | | 0.302 | 2 |
| 0.056 | 59.03 | Specific gravity, 4.470 | 0.056 | 59.24 | | 0.095 | 3 |
| 0.128 | 47.90 | Specific gravity, 3.880 | 0.129 | 48.17 | | 0.267 | 4 |
| 0.139 | 48.86 | Specific gravity, 4.037 | 0.140 | 49.21 | | 0.284 | 5 |
| 0.127 | 44.88 | Specific gravity, 3.742 | 0.128 | 45.27 | | 0.283 | 6 |
| 0.214 | 54.35 | Specific gravity, 4.170 | 0.215 | 54.61 | | 0.394 | 7 |

TABLE 25.—*Partial analyses of iron ores*—Continued.

TENNESSEE—Continued.

| | Chemist. | Sampler. | Remarks. | Kind of ore. | Number. | Name and location of mine. |
|---|---|---|---|---|---|---|
| 8 | King | Chauvenet | From short tunnel, 10 feet deep, on vein | Fossil | 278 | Coker's, Chattanooga district, Hamilton county. |
| 9 | do | do | From upper 21½-inch vein, south outcrop | do | 279 | do |
| 10 | do | do | From pile at edge of small pit ready for shipment. | do | 280 | Lowe's, Chattanooga district, Hamilton county. |
| 11 | do | do | From 2 feet of exposed vein | do | 281 | do |
| 12 | do | do | From stock pile at Chattanooga furnace, Chattanooga. | do | 282 | Kendrick's, near Half Moon island, Meigs county. |
| 13 | White | do | From 10 tons from cut on vein | do | 284 | Solomon's, Oakdale, Roane county |
| 14 | do | do | From pile at cut on vein near old shaft, ½ mile southeast of furnace. | do | 285 | Oakdale, Oakdale, Roane county |
| 15 | do | do | From stock pile at Oakdale Iron Works; ore from bottom of 60-foot shaft on vein. | do | 286 | do |
| 16 | do | do | From main vein, 2½ miles northeast of Rockwood. | do | 287 | Platt's, Rockwood, Roane county |
| 17 | King | do | From 50 tons from main vein | do | 288 | Rockwood's (Platt's), Rockwood, Roane county. |
| 18 | do | do | Along 4-foot upper soft seam at center of east slope of hill. | do | 289 | J. D. Robert's, Kingston, Roane county |
| 19 | do | do | From pile of stripped ore along 50 feet of vein-face. | do | 290 | Robert's, Kingston, Roane county |
| 20 | do | do | From main vein along 50 feet at two points | do | 291 | Brown's, Rockwood, Roane county |
| 21 | do | do | From stock pile of 3 tons from 12-inch vein | do | 292 | do |
| 22 | do | do | From left-hand wall, top of main entry, northeast end of mine. | do | 293 | Hill & Tarwater, Rhea Springs, Rhea county. |
| 23 | do | do | Across 4-foot seam and over whole northeast end of main entry. | do | 294 | do |
| 24 | White | do | From whole vein | do | 295 | do |
| 25 | do | do | From top and sides of tunnel, southwest side, north pit, on old mine diggings. | Limonite | 300 | Wayne, Waynesborough, Wayne county |
| 26 | do | do | From exposed masses and streaks, and from loose lumps in old pit. | Hematite | 501 | Marion furnace, Clifton, Wayne county |
| 27 | King | do | From lumps left in old detritus piles | Limonite | 502 | do |
| 28 | White | do | Selected sample from detritus mounds at bank | do | 206 | Hagen's, Lawrenceburg, Lawrence county. |
| 29 | do | do | From 20-foot horizontal cut along working-face at west end. | do | 207 | Napier's, near Napier furnace, Lawrence county. |
| 30 | do | do | From 3 tons screened ore from all sides of pit | do | 208 | do |
| 31 | do | do | From stock pile at Napier furnace | do | 209 | do |
| 32 | Whitfield | Willis | From ore thrown out of several shafts | do | 479 | Old Tennessee copper mine, Ducktown, Polk county. |
| 33 | do | do | From ore thrown out of shafts | do | 480 | London copper mine, Ducktown, Polk county. |
| 34 | do | do | From exposure of ore in pit | do | 482 | Upper opening, Gee Creek gap, Polk county. |
| 35 | do | do | do | do | 483 | Lower opening, Gee Creek gap, Polk county. |
| 36 | do | do | From angular fragments in deep gullies | Specular | 481 | Sheriff William Burke's, near Athens, McMinn county. |
| 37 | King | do | From bank | Fossil | 973 | Hill's ore-bank, near Athens, McMinn county. |
| 38 | do | do | From numerous pieces near White Cliffs springs. | Limonite | 974 | R. G. Patty's land, near Athens, McMinn county. |
| 39 | do | do | From ore from three shafts | do | 975 | Charles Cates', near Athens, McMinn county. |
| 40 | do | do | From bank | Specular | 976 | Stone Dye bank, near Athens, McMinn county. |
| 41 | Whitfield | do | From massive outcrop of vein | Limonite | 484 | Opening near Jalapa, Monroe county |
| 42 | do | do | From ore apparently thrown from test pit | do | 485 | Jerome Griffith's, near Jalapa, Monroe county. |
| 43 | do | do | From ore mined in small opening | do | 486 | Donnelly bank, Tellico, Monroe county. |
| 44 | do | do | From 500 tons of ore at bank | do | 487 | Hale bank, Tellico, Monroe county |
| 45 | do | do | From fragments at small opening | do | 488 | Opening near Tellico furnace, Monroe county. |
| 46 | do | do | From ore lying by small pit | do | 489 | Outcrop on Anderson's land, Ball Play, Monroe county. |
| 47 | King | do | From ore thrown out at pit | do | 490 | J. H. Rogers, Happy valley, Aram's creek, Blount county. |
| 48 | do | do | From ore in old pits | do | 491 | William Feezelle's property, Codes Creek, Blount county. |
| 49 | do | do | From pieces at small opening | do | 492 | Abram's Creek bank, near Little Tennessee river, Blount county. |
| 50 | do | do | From bank | do | 493 | Mount bank, near Maryville, Blount county. |
| 51 | do | do | From pile of ore for roasting | do | 494 | Widow Kerr's land, near Maryville, Blount county. |
| 52 | do | do | do | do | 495 | Wilson bank, near Maryville, Blount county. |
| 53 | do | do | From small pile of roasted ore at bank | Limonite (roasted) | 496 | do |
| 54 | do | do | From stock pile at Maryville | Limonite | 497 | Seaton bank, near Maryville, Blount county. |
| 55 | do | do | do | do | 498 | Carpenter bank, near Maryville, Blount county. |
| 56 | do | do | From exposure of ore in pit | Fossil | 499 | Peters & Mowry bank, near Knoxville, Knox county. |
| 57 | do | do | From 8 tons from small tunnel | do | 500 | Opening near John Hills, Lone mountain, Anderson county. |
| 58 | do | Chauvenet | From loose lump of fine ore on surface of old detritus piles. | Limonite | 503 | Decatur furnace, Clifton, Decatur county. |

TABLE 25.—*Partial analyses of iron ores*—Continued.

TENNESSEE—Continued.

| NATURAL ORE. | | | DRIED ORE. | | | P. ratio. | |
|---|---|---|---|---|---|---|---|
| P. | Fe. | Miscellaneous. | P. | Fe. | Miscellaneous. | | |
| *P. cent.* | *P. cent.* | | *P. cent.* | *P. cent.* | | *P. cent.* | |
| 0.430 | 31.77 | Specific gravity, 3.425 | 0.432 | 31.88 | | 1.354 | 8 |
| 0.753 | 54.76 | Specific gravity, 4.121 | 0.759 | 55.22 | | 1.375 | 9 |
| 0.248 | 47.09 | Specific gravity, 3.694 | 0.251 | 47.68 | | 0.527 | 10 |
| 0.175 | 48.78 | Specific gravity, 3.750 | 0.177 | 49.26 | | 0.359 | 11 |
| 0.345 | 51.63 | Specific gravity, 3.914 | 0.349 | 52.29 | | 0.668 | 12 |
| 0.595 | 50.64 | Specific gravity, 3.921 | 0.604 | 51.39 | | 1.175 | 13 |
| 0.140 | 46.34 | Specific gravity, 3.777 | 0.141 | 46.81 | | 0.302 | 14 |
| 0.705 | 37.03 | Specific gravity, 3.574 | 0.708 | 37.21 | | 1.904 | 15 |
| 0.920 | 53.30 | Specific gravity, 4.138 | 0.932 | 54.00 | | 1.726 | 16 |
| 0.749 | 55.40 | Specific gravity, 4.013 | 0.761 | 56.27 | | 1.352 | 17 |
| 0.387 | 44.02 | Specific gravity, 3.411 | 0.393 | 44.69 | | 0.879 | 18 |
| 0.426 | 49.26 | Specific gravity, 3.559 | 0.431 | 49.86 | | 0.865 | 19 |
| 0.253 | 52.75 | Specific gravity, 3.898 | 0.257 | 53.55 | | 0.480 | 20 |
| 0.072 | 48.65 | Specific gravity, 3.869 | 0.073 | 49.17 | | 0.148 | 21 |
| 0.766 | 41.77 | Specific gravity, 3.740 | 0.773 | 42.17 | | 1.834 | 22 |
| 0.780 | 50.13 | Specific gravity, 3.941 | 0.790 | 50.79 | | 1.556 | 23 |
| 0.506 | 51.71 | S 0.109 p. ct.; specific gravity, 4.007. Complete analysis. | 0.510 | 52.11 | S 0.110 p. ct | 0.979 | 24 |
| 1.084 | 45.78 | | 1.079 | 46.01 | | 2.308 | 25 |
| 0.314 | 54.86 | S 0.108 p. ct. Complete analysis | 0.319 | 55.70 | S 0.110 p. ct | 0.573 | 26 |
| 0.670 | 50.57 | | 0.678 | 51.18 | | 1.325 | 27 |
| 0.708 | 52.43 | Specific gravity, 3.695 | 0.712 | 52.72 | | 1.350 | 28 |
| 0.340 | 53.27 | Specific gravity, 3.751 | 0.341 | 53.44 | | 0.638 | 29 |
| 0.543 | 49.28 | Specific gravity, 3.596 | 0.547 | 49.60 | | 1.102 | 30 |
| 0.519 | 52.61 | S 0.070 p. ct.; specific gravity, 3.714. Complete analysis. | 0.522 | 52.88 | S 0.070 p. ct | 0.987 | 31 |
| 0.030 | 51.94 | Specific gravity, 4.185 | 0.030 | 53.93 | | 0.058 | 32 |
| 0.035 | 48.96 | Mn. present; specific gravity, 3.828 | 0.036 | 50.48 | Mn. present | 0.070 | 33 |
| 0.724 | 45.47 | | 0.735 | 46.15 | | 1.592 | 34 |
| 1.420 | 49.40 | Specific gravity, 3.616 | 1.440 | 50.13 | | 2.874 | 35 |
| 0.044 | 62.49 | Specific gravity, 4.965 | 0.044 | 62.53 | | 0.070 | 36 |
| 0.822 | 51.42 | | 0.835 | 52.20 | | 1.599 | 37 |
| 0.094 | 56.79 | S 0.089 p. ct.; Mn. present | 0.095 | 57.20 | S 0.090 p. ct.; Mn. present | 0.166 | 38 |
| 0.032 | 55.87 | S 0.273 p. ct.; Mn. present | 0.032 | 56.21 | S 0.275 p. ct.; Mn. present | 0.057 | 39 |
| 0.024 | 65.36 | | 0.024 | 65.79 | | 0.037 | 40 |
| 1.090 | 52.74 | Specific gravity, 3.693 | 1.100 | 53.30 | | 2.067 | 41 |
| 0.870 | 53.55 | | 0.870 | 53.62 | | 1.625 | 42 |
| 0.870 | 45.03 | Mn. 1.03 p. ct | 0.890 | 45.87 | Mn. 1.03 p. ct | 1.932 | 43 |
| 0.445 | 54.78 | S 0.147 p. ct. Complete analysis | 0.450 | 55.22 | S 0.148 p. ct | 0.815 | 44 |
| 1.530 | 45.47 | Specific gravity, 3.452 | 1.550 | 46.11 | | 3.365 | 45 |
| 0.890 | 46.56 | | 0.900 | 47.05 | | 1.912 | 46 |
| 0.491 | 55.48 | Specific gravity, 3.712 | 0.501 | 56.60 | | 0.885 | 47 |
| 0.938 | 55.28 | Specific gravity, 3.728 | 0.949 | 55.95 | | 1.696 | 48 |
| 0.638 | 50.23 | Specific gravity, 3.550 | 0.650 | 51.18 | | 1.270 | 49 |
| 1.042 | 53.85 | Mn. 0.41 p. ct.; specific gravity, 3.704 | 1.059 | 54.75 | Mn. 0.41 p. ct | 1.935 | 50 |
| 0.035 | 57.26 | S 0.347 p. ct.; Mn. trace; specific gravity, 3.805 | 0.035 | 57.96 | S 0.351 p. ct.; Mn. trace | 0.061 | 51 |
| 0.143 | 53.54 | S 0.184 p. ct.; specific gravity, 3.644. Complete analysis. | 0.147 | 54.66 | S 0.188 p. ct | 0.269 | 52 |
| 0.064 | 63.80 | S 0.173 p. ct.; Mn. trace; specific gravity, 4.564 | 0.064 | 64.26 | S 0.174 p. ct.; Mn. trace | 0.107 | 53 |
| 0.104 | 57.60 | S 0.178 p. ct.; Mn. trace | 0.105 | 58.21 | S 0.180 p. ct.; Mn. trace | 0.181 | 54 |
| 0.059 | 53.20 | S 0.266 p. ct.; Mn. trace; specific gravity, 3.596 | 0.060 | 54.21 | S 0.271 p. ct.; Mn. trace | 0.111 | 55 |
| 1.652 | 49.89 | Specific gravity, 3.946 | 1.695 | 50.57 | | 3.311 | 56 |
| 0.522 | 39.08 | | 0.531 | 39.76 | | 1.336 | 57 |
| 1.466 | 49.79 | | 1.490 | 50.62 | | 2.944 | 58 |

TABLE 25.—*Partial analyses of iron ores*—Continued.

TENNESSEE—Continued.

| | Chemist. | Sampler. | Remarks. | Kind of ore. | Number. | Name and location of mine. |
|---|---|---|---|---|---|---|
| 59 | King | Chauvenet | From loose lumps left in pits | Limonite | 504 | Brownsport furnace, Decatur county |
| 60 | do | do | From masses at northwest end of main pit, and from loose lumps thrown from pit. | do | 505 | Ætna, East fork, Cane creek, Hickman county. |
| 61 | do | do | From all accessible parts of old workings | do | 506 | Mill Creek, Centreville, Hickman county. |
| 62 | do | do | From pickings on detritus piles on hill slope and in cuts. | do | 507 | Piney furnace, Dickson, Dickson county. |
| 63 | do | do | From open pits, and from detritus piles | do | 508 | do |
| 64 | do | do | From west bank of Worley furnace property | do | 509 | Worley, Dickson, Dickson county |
| 65 | do | do | From fifteen working faces in main bank | do | 510 | East bank, Worley furnace, Dickson, Dickson county. |
| 66 | do | do | From stock pile of 300 tons at Cumberland furnace. | do | 511 | Cumberland Furnace banks, Cumberland Furnace, Dickson county. |
| 67 | do | do | From five pits on south slope of hill, and from one pit north side of same. | do | 512 | Bell bank, Cumberland Furnace, Dickson county. |
| 68 | do | do | From all parts of bank | do | 513 | Nye, or Furnace bank, Cumberland Furnace, Dickson county. |
| 69 | do | do | From both pits | do | 514 | Red and Henry Drake banks, Cumberland Furnace, Dickson county. |
| 70 | do | do | From all parts of the bank | do | 515 | Burton bank, Cumberland Furnace, Dickson county. |
| 71 | White | do | From stock pile of Rough and Ready furnace | do | 518 | Rough and Ready banks, Stewart county. |
| 72 | do | do | Loose lumps from shaft and from ore in place in main pit. | do | 519 | Mound banks, Stewart county |
| 73 | do | do | Principally from tunnels at west end of bank | do | 520 | Bellwood bank, Bear Springs, Stewart county. |
| 74 | do | do | From head of cut and from piles from whole cut. | do | 521 | West Bellwood bank, Bear Springs, Stewart county. |
| 75 | King | do | From pile at Bear Springs furnace | Pipe limonite | 522 | Pipe bank, Bear Springs, Stewart county. |
| 76 | do | do | From three pits | Limonite | 523 | Race, Graveyard, and East Bellwood, Bear Springs, Stewart county. |
| 77 | do | do | From stock pile | do | 524 | Clark Furnace banks, Stewart county |
| 78 | do | do | From exposure of ore in bank | do | 525 | Fig and Bayley banks, Stewart county. |
| 79 | do | do | From working faces of bank | do | 526 | Banagan and Shurlock, Stewart county. |
| 80 | do | do | From 300 to 400 tons at furnace | do | 527 | "La Grange" and "Sheridan" banks, Stewart county. |
| 81 | do | do | From all parts of open cut below 20 feet from surface. | do | 528 | "La Grange bank," Stewart county |
| 82 | do | do | From bank | do | 529 | "Sheridan" bank, Stewart county |
| 83 | do | do | From small pit; "pipe ore" | do | 530 | Outlaw's, near Indian Mound, Stewart county. |
| 84 | do | Willis | From bank | Fossil | 905 | Sharp's Forge bank, Big Creek gap, Campbell county. |
| 85 | do | do | From outcrop | do | 906 | Opening, Clear Branch, Campbell county. |
| 86 | White | Chauvenet | From old stock pile at Old Poplar Springs furnace. | Limonite (burnt) | 517 | Poplar Springs bank, Poplar Springs, Montgomery county. |
| 87 | King | do | From three main ore banks | Limonite | 531 | Vernon furnace, 18th district, Montgomery county. |
| 88 | do | do | From stock pile of 150 tons at Sailor's Rest station. | do | 532 | Steel's bank, Sailor's Rest station, Montgomery county. |
| 89 | do | do | From southeast side of pit; "pipe ore" | do | 533 | Bryan's bank, Palmyra, Montgomery county. |
| 90 | do | Willis | From uppermost of the four beds | Fossil | 901 | L. J. Stanfield's, Elk Fork valley, Scott county. |
| 91 | do | do | From outcrop | do | 902 | L. J. Stanfield's middle bed, Elk Fork valley, Scott county. |
| 92 | do | do | From lowest of the four beds | do | 903 | L. J. Stanfield's lower bed, Elk Fork valley, Scott county. |
| 93 | do | do | From upper bed of ore | do | 904 | Widow David's farm, Elk Fork valley, Scott county. |
| 94 | do | do | From 50 tons of ore at bank | Limonite | 907 | Vineyard's bank, near Witt's Foundry, Hamblen county. |
| 95 | do | do | From stock pile at railroad, 1 mile from bank | do | 908 | William's bank, near Witt's Foundry, Hamblen county. |
| 96 | do | do | From a few large pieces near the main shaft | do | 909 | G. S. Newman's land, near Sevierville, Sevier county. |
| 97 | do | do | From ore apparently mined and left at bank | do | 910 | Love's Furnace bank, near Sevierville, Sevier county. |
| 98 | do | do | From fragments left at old pit | do | 912 | James Mantooth's land, Sweetwater, Cocke county. |
| 99 | do | do | From 100 tons piled at mouth of tunnel | do | 913 | Opening near station, Wolf creek, Cocke county. |
| 100 | do | do | From upper 3 feet of vein | Specular | 914 | W. R. Smith's land, Wolf creek, Cocke county. |
| 101 | do | do | From pieces of ore found on old dumps | Limonite | 915 | Varner bank, near Hayesville, Greene county. |
| 102 | do | do | From about 1 ton of ore left at bank | do | 916 | Lamb bank, near Hayesville, Greene county. |
| 103 | do | do | From pile of ore laid up for roasting | do | 917 | Stephen's bank, near Hayesville, Greene county. |
| 104 | do | do | From about 2 tons of ore at mine | do | 918 | Green Ridge, south bank, near Greenville, Greene county. |
| 105 | do | do | From 1 ton of ore at bank | do | 919 | Green ridge, east bank, near Greenville, Greene county. |
| 106 | do | do | From small pit near Babb's Mill road | do | 920 | George Babb's, near Greenville, Greene county. |

TABLE 25.—*Partial analyses of iron ores*—Continued.

TENNESSEE—Continued.

| NATURAL ORE. | | | DRIED ORE. | | | P. ratio. | |
|---|---|---|---|---|---|---|---|
| P. | Fe. | Miscellaneous. | P. | Fe. | Miscellaneous. | | |
| *P. cent.* | *P. cent.* | | *P. cent.* | *P. cent.* | | *P. cent.* | |
| 0.366 | 40.63 | | 0.370 | 41.07 | | 0.901 | 59 |
| 0.279 | 50.03 | | 0.281 | 50.46 | | 0.558 | 60 |
| 0.303 | 52.95 | | 0.305 | 53.34 | | 0.572 | 61 |
| 0.389 | 51.86 | | 0.393 | 52.37 | | 0.750 | 62 |
| 0.218 | 51.00 | | 0.220 | 51.55 | | 0.427 | 63 |
| 0.434 | 43.31 | | 0.441 | 44.05 | | 1.002 | 64 |
| 0.210 | 47.14 | | 0.213 | 47.74 | | 0.445 | 65 |
| 0.213 | 48.08 | | 0.216 | 48.65 | | 0.443 | 66 |
| 0.464 | 49.05 | | 0.470 | 49.66 | | 0.946 | 67 |
| 0.180 | 55.47 | | 0.182 | 56.07 | | 0.324 | 68 |
| 0.341 | 46.50 | | 0.345 | 47.10 | | 0.733 | 69 |
| 0.150 | 46.99 | | 0.152 | 47.52 | | 0.319 | 70 |
| 0.156 | 50.74 | | 0.159 | 51.80 | | 0.307 | 71 |
| 0.286 | 48.87 | | 0.288 | 49.22 | | 0.585 | 72 |
| 0.235 | 54.85 | | 0.236 | 55.18 | | 0.428 | 73 |
| 0.189 | 50.36 | | 0.190 | 50.71 | | 0.375 | 74 |
| 0.197 | 57.55 | | 0.198 | 57.97 | | 0.342 | 75 |
| 0.129 | 52.11 | | 0.130 | 52.43 | | 0.248 | 76 |
| 0.257 | 49.56 | | 0.258 | 49.79 | | 0.519 | 77 |
| 0.157 | 51.34 | | 0.160 | 51.76 | | 0.310 | 78 |
| 0.177 | 48.38 | | 0.178 | 48.72 | | 0.366 | 79 |
| 0.237 | 50.91 | S 0.069 p. ct. Complete analysis | 0.238 | 51.20 | S 0.069 p. ct | 0.465 | 80 |
| 0.330 | 52.22 | | 0.333 | 52.70 | | 0.632 | 81 |
| 0.293 | 50.94 | | 0.296 | 51.42 | | 0.575 | 82 |
| 0.197 | 55.15 | S 0.193 p. ct. Complete analysis | 0.199 | 55.64 | S 0.195 p. ct | 0.358 | 83 |
| 0.559 | 41.91 | | 0.564 | 42.31 | | 1.095 | 84 |
| 0.690 | 51.90 | | 0.704 | 52.50 | | 1.341 | 85 |
| 0.162 | 34.68 | | 0.165 | 35.31 | | 0.467 | 86 |
| 0.659 | 47.06 | | 0.672 | 48.01 | | 1.400 | 87 |
| 0.231 | 52.86 | | 0.234 | 53.67 | | 0.437 | 88 |
| 0.225 | 56.07 | | 0.227 | 56.67 | | 0.401 | 89 |
| 0.720 | 45.12 | | 0.738 | 45.43 | | 1.624 | 90 |
| 0.735 | 41.81 | | 0.740 | 42.11 | | 1.757 | 91 |
| 0.899 | 50.13 | | 0.913 | 50.92 | | 1.793 | 92 |
| 0.395 | 33.96 | | 0.397 | 34.15 | | 1.163 | 93 |
| 0.068 | 52.00 | | 0.069 | 52.73 | | 0.131 | 94 |
| 0.020 | 53.81 | $TiO_2$ absent | 0.020 | 54.43 | $TiO_2$ absent | 0.037 | 95 |
| 0.060 | 58.38 | | 0.060 | 58.66 | | 0.103 | 96 |
| 0.108 | 39.86 | Mn. 10.72 p. ct | 0.110 | 40.52 | Mn. 10.72 p. ct | 0.271 | 97 |
| 0.209 | 51.68 | | 0.210 | 51.97 | | 0.404 | 98 |
| 0.823 | 50.03 | $TiO_2$ absent | 0.827 | 50.29 | $TiO_2$ absent | 1.645 | 99 |
| 0.016 | 45.68 | S 0.399 p. ct. Complete analysis | 0.016 | 45.78 | S 0.399 p. ct | 0.035 | 100 |
| 1.179 | 47.57 | $TiO_2$ absent | 1.195 | 48.22 | $TiO_2$ absent | 2.478 | 101 |
| 1.376 | 53.54 | Mn. present | 1.394 | 54.25 | Mn. present | 2.570 | 102 |
| 1.031 | 48.87 | Mn. 6.52 p. ct | 1.044 | 49.49 | Mn. 6.52 p. ct | 2.110 | 103 |
| 0.099 | 53.88 | | 0.100 | 54.22 | | 0.184 | 104 |
| 0.068 | 48.12 | | 0.069 | 48.66 | | 0.141 | 105 |
| 0.089 | 57.33 | | 0.090 | 57.79 | | 0.155 | 106 |

TABLE 25.—*Partial analyses of iron ores*—Continued.

TENNESSEE—Continued.

| | Chemist. | Sampler. | Remarks. | Kind of ore. | Number. | Name and location of mine. |
|---|---|---|---|---|---|---|
| 107 | King | Willis | From scattered pieces of ore on old dump heaps. | Limonite | 921 | Huffine's bank, near Jonesboro', Washington county. |
| 108 | do | do | From large fragments in open cut, "main ore bank." | do | 922 | Main bank, Embreeville works, Bompas cove, Washington county. |
| 109 | do | do | From pit on west side of cove | do | 924 | "Lead mine," Bompas cove, Washington county. |
| 110 | do | do | From bank on west side of cove | do | 923 | Bank near Embreeville furnace, Bompas cove, Unicoi county. |
| 111 | do | do | From an old bank | do | 925 | Casper bank, Greasy cove, Unicoi county. |
| 112 | do | do | From ore at old pits | do | 926 | Blue Springs bank, headwaters Big Lane, Unicoi county. |
| 113 | do | do | From ore in pit nearest top of hill | do | 927 | Near Dr. Hamum's, Greasy cove, Unicoi county. |
| 114 | do | do | From ore at four different openings | do | 928 | Keener bank, Greasy cove, Unicoi county. |
| 115 | do | do | From pieces of ore in old pits | do | 930 | Big bank, Unicoi county |
| 116 | do | do | From pieces of ore at different openings | do | 931 | Queen Station bank, Elizabethton, Carter county. |
| 117 | do | do | From two openings north of river | do | 932 | Bear Wallow and Cedar Hill banks, Elizabethton, Carter county. |
| 118 | do | do | From small openings in field southeast of house. | do | 934 | Weslay Carden's bank, Elizabethton, Carter county. |
| 119 | do | do | From ore thrown out of test pit | do | 962 | Jas. Dugger's land, Stony Creek, Carter county. |
| 120 | do | do | From ore at the bank | do | 963 | Hurley bank, Stony Creek, Carter county. |
| 121 | do | do | From ore thrown out of test pit | do | 964 | Blevin's bank, Stony Creek, Carter county. |
| 122 | do | do | From pieces found at test pit. | Specular | 965 | Maxwell bank, Stony Creek, Carter county. |
| 123 | do | do | From stock pile at furnace | Limonite | 966 | Lips bank, Stony Creek, Carter county. |
| 124 | do | do | do | do | 967 | Hodge bank, Stony Creek, Carter county. |
| 125 | do | do | From washed ore at Carter furnace | do | 968 | Taylor bank, Carter furnace, Stony Creek, Carter county. |
| 126 | do | do | From stock pile at Carter furnace | do | 969 | Ferguson bank, Carter furnace, Stony Creek, Carter county. |
| 127 | do | do | do | Limonite and specular. | 970 | Specular bank, Carter furnace, Stony Creek, Carter county. |
| 128 | do | do | do | Limonite | 971 | Red Shear bank, Carter furnace, Stony Creek, Carter county. |
| 129 | do | do | From surface pieces in field west of bank | Specular | 972 | Cannon bank, Stony Creek, Carter county. |
| 130 | do | do | From 5 tons of ore at bank | Limonite | 935 | Wash Place bank, Little Doe creek, Johnson county. |
| 131 | do | do | From ½ ton at Gooden's forge | do | 936 | Rankine's bank, Little Doe creek, Johnson county. |
| 132 | do | do | From a few pieces of ore at bank | do | 937 | Stout bank, Little Doe creek, Johnson county. |
| 133 | do | do | From about 1 ton at Gooden's forge | do | 938 | Tompkin's bank, Little Doe creek, Johnson county. |
| 134 | do | do | do | do | 939 | Far Mountain bank, Little Doe creek, Johnson county. |
| 135 | do | do | From 3 tons at Wagoner's forge | do | 940 | Near Far Mountain bank, Little Doe creek, Johnson county. |
| 136 | do | do | From material thrown out by blasting | do | 947 | Butler's Furnace bank, near Taylorsville, Johnson county. |
| 137 | do | do | From scattered pieces of ore at bank | do | 948 | Slimp's Laurel Fork bank, Taylorsville, Johnson county. |
| 138 | do | do | From pieces of ore near openings | do | 949 | Donnelly's bank, Shaun's cross-roads, Johnson county. |
| 139 | do | do | From ore at forge | do | 950 | Brown's forge, Little mountain, Roane's creek, Johnson county. |
| 140 | do | do | From stock pile at furnace | do | 951 | Mast bank, Mill branch, Roane's creek, Johnson county. |
| 141 | do | do | From pieces left at old pits | do | 952 | Baker bank, Roane's creek, Johnson county. |
| 142 | do | do | From pieces in old pits | do | 953 | Cove bank, Roane's creek, Johnson county. |
| 143 | do | do | From pieces found at bank | do | 954 | Taylor's bank, Dugger's ford, Johnson county. |
| 144 | do | do | From small pieces near old pits | Specular | 955 | Cross mountain, near mouth of Stony creek, Johnson county. |
| 145 | do | do | From 3 tons of ore at lower forge | Limonite | 956 | Armstead Blevin's bank, Shady valley, Johnson county. |
| 146 | do | do | From 5 tons of ore at bank | do | 958 | King bank, Shady valley, Johnson county. |
| 147 | do | do | From ore found on Gray's hill | Magnetite | 960 | Sharp's bank, near Bristol, Sullivan county. |
| 148 | do | do | From 200 tons of ore at bank | Limonite | 961 | Crockett bank, near Bristol, Sullivan county. |

UTAH.

| | | | | | | |
|---|---|---|---|---|---|---|
| 1 | King | Putnam | From 25 tons ore at Horn Silver smelter, Frisco. | Hematite | 1135 | Wah-Wah mountains, Beaver county |
| 2 | do | do | From 15 tons ore at Horn Silver smelter, Frisco. | Hematite and magnetite. | 1136 | Mooney's, Wah-Wah mountains, Beaver county. |
| 3 | do | do | From a few tons of ore at Frisco smelter | Limonite | 1137 | Vulcan, Star mining district, Beaver county. |
| 4 | do | do | From ore from several prospect holes | Magnetite | 1140 | Lake Superior, Star mining district, Beaver county. |
| 5 | do | do | From 20 tons of ore at Frisco smelter | Limonite | 1138 | Cave, Bradshaw mining district, Beaver county. |
| 6 | do | do | From a few tons of ore at Frisco smelter | Magnetite | 1139 | Frisco Mining and Smelting Company, Rocky Mountain district, Beaver county. |

TABLE 25.—*Partial analyses of iron ores*—Continued.

TENNESSEE—Continued.

| NATURAL ORE. | | | DRIED ORE. | | | P. ratio. | |
|---|---|---|---|---|---|---|---|
| P. | Fe. | Miscellaneous. | P. | Fe. | Miscellaneous. | | |
| *P. cent.* | *P. cent.* | | *P. cent.* | *P. cent.* | | *P. cent.* | |
| 0.308 | 48.60 | | 0.311 | 49.15 | | 0.634 | 107 |
| 0.149 | 57.56 | | 0.151 | 58.40 | | 0.259 | 108 |
| 0.016 | 58.59 | | 0.016 | 59.12 | | 0.027 | 109 |
| 0.715 | 49.11 | | 0.723 | 49.65 | | 1.456 | 110 |
| 1.300 | 50.31 | | 1.318 | 51.00 | | 2.584 | 111 |
| 0.391 | 47.71 | | 0.400 | 48.81 | | 0.820 | 112 |
| 0.194 | 53.37 | | 0.196 | 53.83 | | 0.364 | 113 |
| 0.520 | 53.22 | Mn. 0.76 p. ct | 0.524 | 53.66 | Mn. 0.77 p. ct | 0.977 | 114 |
| 0.880 | 53.18 | Mn. 1.90; $TiO_2$ absent | 0.889 | 53.75 | Mn. 1.93 p. ct.; $TiO_2$ absent | 1.655 | 115 |
| 0.154 | 57.65 | S 0.139 p. ct. Complete analysis | 0.156 | 58.36 | S 0.141 p. ct | 0.267 | 116 |
| 0.576 | 55.92 | Mn. 0.27 p. ct | 0.582 | 56.48 | Mn. 0.27 p. ct | 1.030 | 117 |
| 0.200 | 54.03 | Mn. 0.36 p. ct | 0.207 | 54.38 | Mn. 0.36 p. ct | 0.381 | 118 |
| 1.717 | 52.24 | $TiO_2$ absent | 1.753 | 53.33 | $TiO_2$ absent | 3.287 | 119 |
| 0.153 | 53.95 | | 0.155 | 54.57 | | 0.284 | 120 |
| 1.595 | 49.88 | | 1.619 | 50.63 | | 3.198 | 121 |
| 0.019 | 59.19 | Mn. present | 0.019 | 59.22 | Mn. present | 0.032 | 122 |
| 1.025 | 50.09 | Mn. 0.21 p. ct | 1.031 | 50.38 | Mn. 0.21 p. ct | 2.040 | 123 |
| 0.074 | 34.28 | S 0.098 p. ct. Complete analysis | 0.075 | 34.68 | S 0.099 p. ct | 0.219 | 124 |
| 0.056 | 49.73 | S 0.066 p. ct. Complete analysis | 0.057 | 50.46 | S 0.067 p. ct | 0.113 | 125 |
| 0.280 | 42.97 | $SiO_2$ 24.88 p. ct | 0.282 | 43.23 | $SiO_2$ 24.88 p. ct | 0.652 | 126 |
| 0.338 | 53.96 | S 0.069 p. ct. Complete analysis | 0.339 | 54.15 | S 0.069 p. ct | 0.626 | 127 |
| 0.133 | 55.67 | S 0.110 p. ct.; Mn. present | 0.135 | 56.63 | S 0.112 p. ct.; Mn. present | 0.239 | 128 |
| 0.022 | 63.84 | | 0.022 | 63.92 | | 0.034 | 129 |
| 0.214 | 54.18 | S 0.084 p. ct Complete analysis | 0.216 | 54.72 | S 0.085 p. ct | 0.395 | 130 |
| 1.507 | 46.54 | $TiO_2$ absent | 1.533 | 47.33 | $TiO_2$ absent | 3.298 | 131 |
| 1.273 | 50.99 | Mn. 0.53 p. ct | 1.293 | 51.79 | Mn. 0.54 p. ct | 2.496 | 132 |
| 0.489 | 53.35 | $TiO_2$ absent | 0.493 | 53.80 | $TiO_2$ absent | 0.917 | 133 |
| 0.255 | 54.08 | | 0.256 | 54.35 | | 0.472 | 134 |
| 0.686 | 56.26 | | 0.691 | 56.67 | | 1.219 | 135 |
| 1.245 | 50.74 | | 1.259 | 51.33 | | 2.454 | 136 |
| 0.336 | 53.05 | | 0.338 | 53.36 | | 0.633 | 137 |
| 0.291 | 53.18 | | 0.294 | 53.60 | | 0.547 | 138 |
| 0.441 | 53.78 | | 0.445 | 54.21 | | 0.820 | 139 |
| 0.768 | 54.46 | | 0.773 | 54.86 | | 1.410 | 140 |
| 0.160 | 57.68 | S 0.119 p. ct. Complete analysis | 0.161 | 57.89 | S 0.119 p. ct | 0.278 | 141 |
| 0.606 | 46.80 | Mn. 7.08 p. ct.; $TiO_2$ absent | 0.611 | 47.22 | Mn. 7.14 p. ct.; $TiO_2$ absent | 1.295 | 142 |
| 0.256 | 52.83 | | 0.259 | 53.47 | | 0.485 | 143 |
| 0.015 | 58.15 | Mn. present; $TiO_2$ absent | 0.015 | 58.22 | Mn. present; $TiO_2$ absent | 0.026 | 144 |
| 0.186 | 52.58 | Mn. 1.20 p. ct | 0.188 | 53.11 | Mn. 1.21 p. ct | 0.354 | 145 |
| 0.092 | 56.73 | Mn. 0.92 p. ct | 0.093 | 57.28 | Mn. 0.93 p. ct | 0.162 | 146 |
| 0.038 | 56.47 | S 0.163 p. ct. Complete analysis | 0.038 | 56.69 | S 0.164 p. ct | 0.067 | 147 |
| 0.018 | 57.63 | S 0.196 p. ct.; Mn. present | 0.018 | 58.19 | S 0.198 p. ct.; Mn. present | 0.031 | 148 |

UTAH.

| | | | | | | | |
|---|---|---|---|---|---|---|---|
| 0.012 | 60.63 | | 0.012 | 60.76 | | 0.020 | 1 |
| 0.015 | 57.84 | | 0.015 | 58.16 | | 0.026 | 2 |
| 0.139 | 49.61 | | 0.142 | 50.60 | | 0.280 | 3 |
| 0.237 | 57.25 | | 0.238 | 57.51 | | 0.414 | 4 |
| 0.044 | 39.31 | | 0.044 | 39.73 | | 0.112 | 5 |
| 0.014 | 62.23 | | 0.014 | 62.67 | | 0.022 | 6 |

TABLE 25.—*Partial analyses of iron ores*—Continued.

UTAH—Continued.

| | Chemist. | Sampler. | Remarks. | Kind of ore. | Number. | Name and location of mine. |
|---|---|---|---|---|---|---|
| 7 | King | Putnam | From outcrop | Magnetite | 1141 | Marshall, Iron Spring or Magnetic district, Iron county. |
| 8 | do | do | do | do | 1142 | War Eagle, Iron Spring or Magnetic district, Iron county. |
| 9 | do | do | do | do | 1143 | Great Western, Iron Spring or Magnetic district, Iron county. |
| 10 | do | do | do | do | 1144 | Wanderer, Iron Spring or Magnetic district, Iron county. |
| 11 | do | do | do | do | 1145 | Southern Cross, Iron Spring or Magnetic district, Iron county. |
| 12 | do | do | do | do | 1146 | Black Magnetic, Oak Springs, Iron county. |
| 13 | do | do | In drift | Hematite | 1147 | Adelade, Oak Springs, Iron county |
| 14 | do | do | From outcrop | Magnetite (lodestone) | 1148 | Oak Springs, Oak Springs, Iron county. |
| 15 | do | do | do | Magnetite | 1149 | Mountain Peak, Oak Springs, Iron county. |
| 16 | do | do | do | do | 1150 | Chesapeake, Oak Springs, Iron county. |
| 17 | do | do | In drift | Limonite (decomposed magnetite?). | 1151 | Duncan, Oak Springs, Iron county |
| 18 | do | do | Chippings taken across 150 feet of outcrop at point where ore was freest from quartz. | Magnetite | 1152 | Blowout, Oak Springs, Iron county |
| 19 | do | do | Selected pieces from outcrop | do | 1153 | do |
| 20 | do | do | From 30 tons broken ore at mine | Hematite (black) | 1155 | Black Stallion, East Tintic, Utah county. |
| 21 | do | do | From face of stope and broken ore in stope | Hematite | 1156 | Hematite, Tintic (east of Divide), Utah county. |
| 22 | do | do | From broken ore in stope and from face of stope. | Hematite (black) | 1157 | Sailor Boy, Tintic (east of Divide), Utah county. |
| 23 | do | do | From face of stope | Hematite | 1158 | Queen of the West, Tintic (east of Divide), Utah county. |
| 24 | do | do | From 50 tons of ore at mine | Hematite (black) | 1159 | Billings, Tintic (east of Divide), Utah county. |
| 25 | do | do | From 50 tons of ore at stage station, near mines east of Divide. | do | 1160 | Southern Extension of Dragon, Tintic (west of Divide), Juab county. |
| 26 | do | do | From a few pounds of ore near prospect hole | Hematite | 1161 | Vulcan, Ogden cañon, Weber county |
| 27 | do | do | Selected pieces from cut | do | 1162 | Near Silver Cliff mine, Gold Creek cañon, Weber county. |
| 28 | do | do | From about 2,000 tons of ore at foot of hill; sample better than average of the pile. | Specular hematite | 1163 | Willard, near Willard station, Box Elder county. |

VERMONT.

| | | | | | | |
|---|---|---|---|---|---|---|
| 1 | Richmond | Benton | From surface fragments near old pit 1 mile north of Caleb Rockwood's house. | Limonite | 680 | Monkton ore bed, Monkton, Addison county. |
| 2 | do | do | From small piles of ore west of ocher works | Manganiferous limonite. | 683 | Leicester ocher bed, Leicester, Addison county. |
| 3 | do | do | From several hundred tons of ore near pit and at ocher works. | Limonite and hematite. | 681 | Forestdale or Blake, near Brandon, Rutland county. |
| 4 | do | do | From piles near roadside at ocher works | Limonite | 682 | Brandon ore bed, near Brandon, Rutland county. |
| 5 | do | do | From small piles of weathered ore north of furnace. | do | 684 | Granger or Pittsford furnace, Pittsford, Rutland county. |
| 6 | do | do | From piles of weathered ore near old workings | do | 686 | Chipman ore bed, Tinmouth, Rutland county. |
| 7 | do | do | From ledge near iron-ore dressing works | Magnetite | 688 | Bethel Iron Company's mines, Pittsfield, Rutland county. |
| 8 | do | do | From piles of dressed ore at dressing works | do | 689 | do |
| 9 | do | do | From piles of ore near old washer | Limonite | 685 | Godfrey ore bed, Bennington, Bennington county. |
| 10 | do | do | From stock piles at furnace | Siderite | 687 | Tyson furnace, Plymouth, Windsor county. |

VIRGINIA.

| | | | | | | |
|---|---|---|---|---|---|---|
| 1 | Gooch | Benton | From near shaft on east chute of ore | Micaceous hematite | 601 | Stapleton, Porridge creek, near Stapleton, Amherst county. |
| 2 | do | do | From stopes of main deposit | do | 602 | do |
| 3 | do | do | From stock piles on canal wharf | do | 603 | do |
| 4 | do | do | From 6-inch seam on west wall of deposit in stope above lowest drift 500 feet from mouth of tunnel. | Specular | 1012 | Stapleton (Maud vein), Porridge creek, near Stapleton, Amherst county. |
| 5 | do | do | From 2-foot 6-inch seam of ore on east wall of same stope. | do | 1013 | Stapleton (Maud veins), Porridge creek, near Stapleton, Amherst county. |
| 6 | do | do | From bottom of the two shafts | Micaceous hematite | 604 | Naylor & Co.'s, Riverville, James river, Amherst county. |
| 7 | do | do | From 1-foot seam at bottom of northeast shaft at depth of 115 feet. | Micaceous specular | 1018 | Naylor & Co.'s No. 6½, Riverville, James river, Amherst county. |
| 8 | do | do | From heads of all the drifts, main deposit | Specular and magnetite. | 605 | Dover & Co.'s No. 11, Riverville, James river, Amherst county. |
| 9 | do | do | From further ends of drifts between shafts 2 and 3; also southwest of shaft 3. | Micaceous hematite and magnetite. | 606 | do |
| 10 | do | do | From piles of ore from all parts of cut | Hematite and magnetite. | 607 | Dover & Co.'s No. 6, Riverville, James River, Amherst county. |
| 11 | do | do | From pile of ore near shaft; from shaft at depth of 100 feet. | Micaceous hematite | 608 | Adams, Scotts & Co.'s No. 13, Riverville, James river, Amherst county. |
| 12 | do | do | From head of drift 105 feet deep; also same drift near bottom of shaft. | do | 609 | Adams, Scotts & Co.'s No. 10½, Riverville, James river, Amherst county. |

TABLE 25.—*Partial analyses of iron ores*—Continued.

UTAH—Continued.

| NATURAL ORE. | | | DRIED ORE. | | | P. ratio. | |
|---|---|---|---|---|---|---|---|
| P. | Fe. | Miscellaneous. | P. | Fe. | Miscellaneous. | | |
| *P. cent.* | *P. cent.* | | *P. cent.* | *P. cent.* | | *P. cent.* | |
| 0.248 | 57.55 | | 0.248 | 57.61 | | 0.431 | 7 |
| 0.193 | 61.43 | | 0.193 | 61.50 | | 0.312 | 8 |
| 0.113 | 67.81 | | 0.113 | 67.84 | | 0.167 | 9 |
| 0.264 | 64.09 | | 0.264 | 64.18 | | 0.412 | 10 |
| 0.425 | 61.04 | | 0.426 | 61.74 | | 0.689 | 11 |
| 0.080 | 67.09 | | 0.080 | 67.15 | | 0.119 | 12 |
| 0.182 | 63.21 | | 0.183 | 63.60 | | 0.288 | 13 |
| 0.064 | 65.48 | | 0.064 | 65.54 | | 0.098 | 14 |
| 0.093 | 67.09 | | 0.093 | 67.15 | | 0.139 | 15 |
| 0.059 | 68.00 | | 0.059 | 68.13 | | 0.087 | 16 |
| 0.066 | 59.41 | | 0.067 | 60.02 | | 0.111 | 17 |
| 0.057 | 67.31 | | 0.057 | 67.37 | | 0.085 | 18 |
| 0.038 | 68.44 | | 0.038 | 68.50 | | 0.055 | 19 |
| 0.043 | 52.47 | | 0.044 | 53.61 | | 0.082 | 20 |
| 0.096 | 48.21 | $TiO_2$ absent | 0.098 | 49.11 | $TiO_2$ absent | 0.199 | 21 |
| 0.142 | 61.18 | | 0.144 | 61.94 | | 0.232 | 22 |
| 0.426 | 51.46 | | 0.434 | 53.07 | | 0.817 | 23 |
| 0.052 | 46.46 | | 0.053 | 47.56 | | 0.112 | 24 |
| 0.259 | 59.30 | | 0.261 | 59.81 | | 0.437 | 25 |
| 0.026 | 45.94 | | 0.026 | 45.97 | | 0.057 | 26 |
| 0.130 | 9.89 | | 0.130 | 9.89 | | 1.315 | 27 |
| 0.038 | 51.31 | | 0.038 | 51.31 | | 0.074 | 28 |

VERMONT.

| | | | | | | | |
|---|---|---|---|---|---|---|---|
| 0.223 | 42.05 | Mn. 0.65 p. ct. | 0.224 | 42.26 | Mn. 0.65 p. ct. | 0.530 | 1 |
| 0.223 | 47.00 | Mn. 5.33 p. ct. | 0.225 | 47.34 | Mn. 5.37 p. ct. | 0.474 | 2 |
| 0.237 | 51.48 | | 0.238 | 51.74 | | 0.460 | 3 |
| 0.106 | 42.05 | Mn. 0.08 p. ct. | 0.107 | 42.46 | Mn. 0.08 p. ct. | 0.252 | 4 |
| 0.268 | 45.80 | | 0.270 | 46.10 | | 0.585 | 5 |
| 0.174 | 42.96 | | 0.176 | 43.43 | | 0.406 | 6 |
| 0.146 | 10.10 | | 0.146 | 10.10 | | 1.446 | 7 |
| 0.026 | 65.82 | | 0.026 | 65.83 | | 0.040 | 8 |
| 0.614 | 45.90 | | 0.623 | 46.55 | | 1.338 | 9 |
| 0.010 | 32.24 | S 2.158 p. ct. Complete analysis | 0.010 | 32.27 | S 2.160 p. ct. | 0.031 | 10 |

VIRGINIA.

| | | | | | | | |
|---|---|---|---|---|---|---|---|
| 0.096 | 51.21 | $TiO_2$ present | 0.096 | 51.24 | $TiO_2$ present | 0.187 | 1 |
| 0.139 | 49.89 | | 0.139 | 49.98 | | 0.279 | 2 |
| 0.129 | 56.50 | $TiO_2$ present | 0.129 | 56.61 | $TiO_2$ present | 0.228 | 3 |
| 0.136 | 50.38 | | 0.136 | 50.54 | | 0.270 | 4 |
| 0.206 | 48.16 | | 0.207 | 48.36 | | 0.428 | 5 |
| 0.033 | 48.92 | | 0.033 | 48.98 | | 0.067 | 6 |
| 0.012 | 51.14 | | 0.012 | 51.29 | | 0.023 | 7 |
| 0.103 | 48.47 | S 0.352 p. ct. Complete analysis | 0.103 | 48.50 | S 0.352 p. ct. | 0.212 | 8 |
| 0.061 | 54.88 | S 0.579 p. ct. Complete analysis | 0.061 | 54.92 | S 0.579 p. ct. | 0.111 | 9 |
| 0.131 | 36.10 | | 0.131 | 36.18 | | 0.363 | 10 |
| 0.051 | 44.96 | $TiO_2$ present | 0.051 | 45.11 | $TiO_2$ present | 0.113 | 11 |
| 0.095 | 40.51 | | 0.095 | 40.58 | | 0.235 | 12 |

TABLE 25.—*Partial analyses of iron ores*—Continued.

VIRGINIA—Continued.

| | Chemist. | Sampler. | Remarks. | Kind of ore. | Number. | Name and location of mine. |
|---|---|---|---|---|---|---|
| 59 | Gooch | Benton | From excavation in mountain side | Limonite | 647 | Carnes bank, Schultz property, Botetourt county. |
| 60 | do | do | From cross-cut showing ore at surface of deposit. | Manganiferous limonite. | 648 | Spengler bank, Schultz property, Botetourt county. |
| 61 | do | do | From small piles of ore near furnace | Limonite | 649 | Salisbury Furnace bank, Purgatory mountain, Botetourt county. |
| 62 | do | do | From excavation on hillside | do | 651 | May's bank, May's mountain, Botetourt county. |
| 63 | do | do | From old bank ¼ mile southwest from furnace | do | 655 | Callie Furnace bank (old), Botetourt county. |
| 64 | do | do | From 1,000 tons of ore at furnace | do | 656 | Callie Furnace bank (new), Botetourt county. |
| 65 | do | do | From piles of lump-ore from two cuts at present worked. | do | 700 | Hickory Hollow or Salisbury furnace, Botetourt county. |
| 66 | do | do | From piles of lump- and fine-ore average of mine. | do | 1001 | do |
| 67 | do | do | From four pits 4 miles northeast of furnace | do | 652 | Lucy Selina (Longdale) bank, Brushy mountain, Alleghany county. |
| 68 | do | do | From 10,000 tons lump ore at furnace | do | 653 | do |
| 69 | do | do | From pile of fine ore (ocherous) at furnace | do | 654 | do |
| 70 | do | do | From pile of ore at mine | Hematite (fossil) | 657 | Quinnimont mine at Clifton Forge, Alleghany county. |
| 71 | do | do | From five pits on northeast side of Fork run | Limonite | 658 | Lowmoor, Lowmoor station, Alleghany county. |
| 72 | do | do | From four tunnels on southwest side of Fork run. | do | 659 | do |
| 73 | do | do | From across 10-foot bed at head of tunnel | do | 1002 | Dickey, near Covington, Alleghany county. |
| 74 | do | do | From across 15 feet of upper surface of bed | do | 1003 | Smith or McAlister, Covington, Alleghany county. |
| 75 | do | do | From 50 tons lump ore ready for shipment | do | 1004 | Trice's bank, Peter's mountain, Alleghany county. |
| 76 | do | do | From across face of bed at end of main cut | do | 1005 | Sadler's, on Stack's land, near Covington, Alleghany county. |
| 77 | do | do | From 300 tons of lump ore ready for shipment | do | 1006 | do |
| 78 | do | do | From across face of bed, avoiding siliceous band. | do | 1007 | Gay & Lewis, Peter's mountain, Alleghany county. |
| 79 | do | do | From 25 tons of ore at bank ready for shipment | do | 1008 | Huddleston bank, Peter's mountain, Alleghany county. |
| 80 | do | do | From across 6 feet of outcrop, the best of the deposit. | do | 1009 | Potts Creek outcrops, A. Given's land, Alleghany county. |
| 81 | do | do | From across 12 feet of deposit about the middle of exposure. | do | 1010 | Dolly Ann furnace, Pounding Mill run, Alleghany county. |
| 82 | do | do | From 30 or 40 tons of screened ore at mine | do | 1011 | Wills', Covington, Alleghany county. |
| 83 | do | do | From open cut ½ mile north-northeast from furnace. | do | 660 | Buffalo Gap furnace, Augusta county |
| 84 | do | do | From open cut ¾ mile southeast from furnace | Limonite and earthy hematite. | 661 | Ferrol (Elizabeth furnace), Augusta county. |
| 85 | do | do | From variety of "hematite" in same pit | do | 662 | do |
| 86 | do | do | From pit ¾ mile west from furnace | Limonite | 663 | Kennedy Furnace bank, Augusta county |
| 87 | do | do | do | do | 664 | Mount Torrey Furnace bank, Augusta county. |
| 88 | do | do | From pit ¼ mile southwest from furnace No. 2 | do | 665 | Fox Mountain bank, Rockingham county. |
| 89 | do | do | From large pile of washed fine ore at washer | do | 666 | do |
| 90 | do | do | From pile of washed and roasted fine ore at kiln. | Limonite (roasted) | 667 | do |
| 91 | do | do | From pile of unwashed roasted ore at furnace | Limonite | 668 | do |
| 92 | do | do | From five tons of ore at mine | do | 673 | Miller bank, near Mount Vernon furnace, Rockingham county. |
| 93 | do | do | From stock pile at furnace | Limonite and hematite. | 674 | Raines & Weaver banks, Mount Vernon furnace, Rockingham county. |
| 94 | do | do | From piles of ore at washer 4 miles north-northeast from furnace. | do | 675 | do |
| 95 | do | do | From heading of tunnel in west bank 1½ miles southwest from furnace. | Limonite | 669 | West bank, near Van Buren furnace, Shenandoah county. |
| 96 | do | do | From stock piles at furnace | do | 670 | Three Top Mountain bank, near Mine Run Furnace, Shenandoah county. |
| 97 | do | do | From pit ½ mile north from furnace | Limonite and hematite. | 671 | Old bank, near Liberty Furnace, Shenandoah county. |
| 98 | do | do | From most northerly and from middle shaft ½ mile north-northeast from furnace. | do | 672 | Hollow bank, Liberty Furnace, Shenandoah county. |
| 99 | do | do | From piles of ore at mine | Limonite | 699 | Stonewall, near Stonewall creek, Appomattox county. |
| 100 | do | do | From 250 tons of ore at mine ready for shipment. | Specular | 1021 | Chestnut mountain, Chestnut mountain, Appomattox county. |

WASHINGTON.

| | | | | | | |
|---|---|---|---|---|---|---|
| 1 | Whitfield | Putnam | From 300 tons of ore at Puget Sound Iron Company's furnace, Irondale. | Bog | 1168 | Puget Sound Iron Company, Chimicon valley, Jefferson county. |

WEST VIRGINIA.

| | | | | | | |
|---|---|---|---|---|---|---|
| 1 | Whitfield | Benton | From 1-foot seam of ore in pit, 8 to 10 feet below surface. | Carbonate, "Martin's ore". | 690 | Johnson mine, Monongalia county |
| 2 | do | do | From piles of ore at mouth of drift | Carbonate and limonite, "England ore". | 691 | do |
| 3 | do | do | From piles of fresh ore at mouth of drift | Carbonate, "Spring Hill ore". | 692 | Spring Hill, or Wadsworth bank, Monongalia county. |
| 4 | do | do | From 1 lump of ore near old mine | Carbonate, "Haine's ore". | 693 | Near Laurel Iron Works, Cole's Run, Monongalia county. |

TABLE 25.—*Partial analyses of iron ores*—Continued.

VIRGINIA—Continued.

| NATURAL ORE. | | | DRIED ORE. | | | P. ratio. | |
|---|---|---|---|---|---|---|---|
| P. | Fe. | Miscellaneous. | P. | Fe. | Miscellaneous. | | |
| *P. cent.* | *P. cent.* | | *P. cent.* | *P. cent.* | | *P. cent.* | |
| 0.044 | 41.55 | $TiO_2$ present; Mn. present | 0.044 | 41.60 | $TiO_2$ present; Mn. present | 0.106 | 13 |
| 0.126 | 39.73 | $TiO_2$ present | 0.126 | 39.85 | $TiO_2$ present | 0.317 | 14 |
| 0.121 | 24.67 | | 0.121 | 24.60 | | 0.490 | 15 |
| 0.057 | 46.63 | | 0.057 | 46.67 | | 0.122 | 16 |
| 0.118 | 38.43 | $TiO_2$ present | 0.118 | 38.51 | $TiO_2$ present | 0.307 | 17 |
| 0.850 | 44.54 | do | 0.857 | 44.90 | do | 1.908 | 18 |
| 0.049 | 53.02 | | 0.049 | 53.20 | | 0.092 | 19 |
| 0.613 | 34.19 | Mn. present | 0.620 | 34.59 | Mn. present | 1.793 | 20 |
| 0.577 | 50.73 | | 0.582 | 51.13 | | 1.137 | 21 |
| 0.120 | 34.12 | | 0.121 | 34.26 | | 0.244 | 22 |
| 0.253 | 53.79 | | 0.256 | 54.38 | | 0.470 | 23 |
| 0.630 | 44.40 | Mn. present. | 0.634 | 44.67 | Mn. present | 1.419 | 24 |
| 0.357 | 32.91 | | 0.358 | 32.41 | | 1.102 | 25 |
| 0.527 | 41.69 | Mn. present | 0.533 | 42.15 | Mn. present | 1.264 | 26 |
| 0.250 | 40.65 | $TiO_2$ present | 0.251 | 41.05 | $TiO_2$ present | 0.615 | 27 |
| 0.535 | 36.27 | Mn. present; $TiO_2$ present | 0.541 | 36.65 | Mn. present; $TiO_2$ present | 1.476 | 28 |
| 0.072 | 60.87 | Mn. present | 0.072 | 61.21 | Mn. present | 0.118 | 29 |
| 0.086 | 59.83 | Mn. present; $TiO_2$ present | 0.089 | 60.29 | Mn. present; $TiO_2$ present | 0.144 | 30 |
| 0.117 | 26.13 | Mn. present | 0.120 | 26.85 | Mn. present | 0.448 | 31 |
| 0.055 | 46.69 | Mn. present; $TiO_2$ present | 0.055 | 46.97 | Mn. present; $TiO_2$ present | 0.118 | 32 |
| 0.018 | 53.59 | S 0.364 p. ct. Complete analysis | 0.018 | 53.66 | S 0.364 p. ct | 0.034 | 33 |
| 0.203 | 43.60 | Mn. present | 0.205 | 43.38 | Mn. present | 0.472 | 34 |
| 0.027 | 58.30 | | 0.028 | 59.54 | | 0.046 | 35 |
| 0.113 | 55.04 | | 0.115 | 55.90 | | 0.205 | 36 |
| 0.083 | 56.29 | S 0.062 p. ct. Complete analysis | 0.085 | 57.47 | S 0.063 p. ct | 0.148 | 37 |
| 0.023 | 56.43 | | 0.024 | 57.78 | | 0.041 | 38 |
| 0.051 | 58.58 | Mn. present | 0.052 | 59.33 | Mn. present | 0.087 | 39 |
| 0.229 | 49.96 | do | 0.233 | 50.84 | do | 0.458 | 40 |
| 0.160 | 46.26 | Mn. present; $TiO_2$ present | 0.163 | 47.11 | Mn. present; $TiO_2$ present | 0.346 | 41 |
| 0.156 | 56.29 | S 0.094 p. ct. Complete analysis | 0.158 | 56.97 | S 0.095 p. ct | 0.277 | 42 |
| 0.165 | 42.23 | S 0.063 p. ct. Complete analysis | 0.167 | 42.77 | S 0.064 p. ct | 0.310 | 43 |
| 0.179 | 54.21 | Mn. present | 0.181 | 54.81 | Mn. present | 0.330 | 44 |
| 0.117 | 53.14 | do | 0.119 | 53.90 | do | 0.220 | 45 |
| 0.086 | 51.15 | do | 0.087 | 51.89 | do | 0.168 | 46 |
| 0.068 | 34.84 | | 0.069 | 35.38 | | 0.195 | 47 |
| 0.150 | 54.63 | | 0.151 | 55.15 | | 0.275 | 48 |
| 0.053 | 54.56 | | 0.054 | 55.53 | | 0.097 | 49 |
| 0.033 | 56.43 | | 0.033 | 57.13 | | 0.058 | 50 |
| 0.034 | 56.22 | | 0.034 | 56.90 | | 0.060 | 51 |
| 0.125 | 46.61 | S 0.056 p. ct. Complete analysis | 0.127 | 47.51 | S 0.057 p. ct | 0.267 | 52 |
| 0.087 | 46.12 | Mn. present; $TiO_2$ present | 0.088 | 46.90 | Mn. present; $TiO_2$ present | 0.189 | 53 |
| 0.393 | 39.52 | | 0.396 | 39.79 | | 0.994 | 54 |
| 0.462 | 44.06 | | 0.465 | 44.37 | | 1.049 | 55 |
| 0.271 | 48.88 | Mn. present; $TiO_2$ present | 0.273 | 49.27 | Mn. present; $TiO_2$ present | 0.554 | 56 |
| 0.409 | 42.64 | | 0.411 | 42.89 | | 0.959 | 57 |
| 0.555 | 53.35 | Mn. present | 0.562 | 54.03 | Mn. present | 1.040 | 58 |

TABLE 25.—*Partial analyses of iron ores*—Continued.

WEST VIRGINIA—Continued.

| | Chemist. | Sampler. | Remarks. | Kind of ore. | Number. | Name and location of mine. |
|---|---|---|---|---|---|---|
| 5 | Whitfield | Benton | From seam of ore in drift 50 feet from surface | Carbonate, "Big Honeycomb". | 694 | Hope mine, Monongalia county |
| 6 | do | do | From 1 lump of ore near old workings | Carbonate, "Stratford ore". | 695 | Cole's Run, Monongalia county |
| 7 | do | do | From 3 or 4 lumps of ore at old workings | Carbonate, "Hastings ore". | 696 | Near Ice's ferry, Monongalia county |
| 8 | do | do | Across breast of ore 12 feet thick, avoiding streaks of interbedded clay. | Limonite | 1077 | Bloomery furnace, Capon mountain, Hampshire county. |
| 9 | do | do | From 500 tons of ore at furnace | Fossil | 1078 | N. E. of Bloomery furnace, Capon mountain, Hampshire county. |
| 10 | do | do | From 100 tons of ore at furnace | do | 1079 | S. W. of Bloomery furnace, Capon mountain, Hampshire county. |
| 11 | do | do | Across 8 feet of the deposit, from top to bottom of the pit. | Hematite | 1080 | Olear, near Keyser, Mineral county |
| 12 | do | do | From scattered surface fragments | Limonite | 1081 | Chris. Martin's land, near Ridgeville, Mineral county. |
| 13 | do | do | Across 2 beds of ore; aggregate thickness, 20 inches. | Fossil | 1082 | Lewis, Greenland gap, Grant county |
| 14 | do | do | Across 3 beds of ore; aggregate thickness, 6 feet. | do | 1083 | Outcrop on Wm. Michael's land, Walker's ridge, Grant county. |
| 15 | do | do | From 25 tons of ore at mine ready for furnace | Limonite | 1084 | Half Moon, Capon Iron Works, Hardy county. |

WISCONSIN.

| | | | | | | |
|---|---|---|---|---|---|---|
| 1 | King | Willis | From pile of ore from outcrop | Specular | 985 | Old iron works, Black River Falls, Jackson county. |
| 2 | do | do | From outcrop of ore on summit of mound | Specular schist | 986 | Big iron mound, Black River Falls, Jackson county. |
| 3 | do | do | From outcrop | Hematite | 987 | Paddy's Rest creek, Sec. 17, T. 22, R. 3 W., Jackson county. |
| 4 | do | do | From lower part of bed | Fossil | 988 | Northwestern Iron Company, Iron mountain, Dodge county. |
| 5 | do | do | From upper part of stratum | do | 989 | do |
| 6 | do | do | From outcrop | do | 990 | Rock ore, Wisconsin Iron Company, Iron mountain, Dodge county. |

WYOMING TERRITORY.

| | | | | | | |
|---|---|---|---|---|---|---|
| 1 | King | Putnam | At breast in cut | Hematite | 1133 | Shaw, near Rawlin's station, Carbon county. |
| 2 | do | do | do | do | 1134 | Friend, near Rawlin's station, Carbon county. |

BRITISH COLUMBIA.

| | | | | | | |
|---|---|---|---|---|---|---|
| 1 | Whitfield | Putnam | From 600 tons of ore at Puget Sound Iron Company's furnace, Irondale, Washington territory. | Magnetite | 1109 | Puget Sound Iron Company, Texada island. |

TABLE 25.—*Partial analyses of iron ores*—Continued.

WEST VIRGINIA—Continued.

| NATURAL ORE. | | | DRIED ORE. | | | P. ratio. | |
|---|---|---|---|---|---|---|---|
| P. | Fe. | Miscellaneous. | P. | Fe. | Miscellaneous. | | |
| *P. cent.* | *P. cent.* | | *P. cent.* | *P. cent.* | | *P. cent.* | |
| 0.271 | 30.90 | | 0.272 | 30.97 | | 0.877 | 5 |
| 0.154 | 29.89 | | 0.154 | 29.95 | | 0.515 | 6 |
| 0.780 | 31.13 | | 0.781 | 31.22 | | 2.506 | 7 |
| 0.086 | 38.04 | | 0.087 | 38.40 | | 0.226 | 8 |
| 0.286 | 49.53 | | 0.294 | 50.94 | | 0.577 | 9 |
| 0.996 | 47.05 | $TiO_2$ present | 1.011 | 47.78 | $TiO_2$ present | 2.117 | 10 |
| 0.218 | 29.65 | | 0.219 | 29.78 | | 0.735 | 11 |
| 0.708 | 56.36 | | 0.715 | 56.89 | | 1.256 | 12 |
| 0.554 | 43.09 | | 0.550 | 43.50 | | 1.280 | 13 |
| 0.487 | 47.36 | | 0.487 | 47.36 | | 1.028 | 14 |
| 0.361 | 43.55 | | 0.365 | 44.04 | | 0.829 | 15 |

WISCONSIN.*

| | | | | | | | |
|---|---|---|---|---|---|---|---|
| 0.057 | 35.45 | | 0.057 | 35.49 | | 0.161 | 1 |
| 0.047 | 37.60 | $TiO_2$ absent | 0.047 | 37.17 | $TiO_2$ absent | 0.127 | 2 |
| 0.104 | 19.36 | | 0.105 | 19.58 | | 0.537 | 3 |
| 1.118 | 36.06 | | 1.125 | 36.27 | | 0.319 | 4 |
| 1.392 | 51.75 | | 1.403 | 52.17 | | 2.690 | 5 |
| 0.534 | 56.52 | | 0.536 | 56.68 | | 0.945 | 6 |

* See also under Lake Superior.

WYOMING TERRITORY.

| | | | | | | | |
|---|---|---|---|---|---|---|---|
| 0.046 | 56.96 | | 0.046 | 57.19 | | 0.081 | 1 |
| 0.593 | 63.29 | | 0.597 | 63.69 | | 0.937 | 2 |

BRITISH COLUMBIA.

| | | | | | | | |
|---|---|---|---|---|---|---|---|
| 0.013 | 65.53 | | 0.013 | 65.71 | | 0.020 | 1 |

# TABLE 26.—COMPLETE ANALYSES OF IRON ORES.

TABLE 26.—*Complete analyses of iron ores.*

| | | 202 | | 230 | | 235 | | 242 | |
|---|---|---|---|---|---|---|---|---|---|
| | | *State:* ALABAMA. *County:* Jefferson. *Location:* Eureka mine, Sec. 21, T. 18, R. 3 W. *Analysis No.:* 202. *Sampler:* Chauvenet. *Chemist:* White. *Kind of ore:* Fossil. *Remarks:* From face of ore near end of entry, seam No. 1. | | *State:* ALABAMA. *County:* Tuscaloosa. *Location:* Eureka mine, Sec. 2, T. 21, R. 6 W. *Analysis No.:* 230. *Sampler:* Chauvenet. *Chemist:* White. *Kind of ore:* Limonite. *Remarks:* From lumps in place in lower bed S. by W. of washing machine. | | *State:* ALABAMA. *County:* Shelby. *Location:* Shelby mine, Sec. 13, T. 22, R. 1 W. *Analysis No.:* 235. *Sampler:* Chauvenet. *Chemist:* White. *Kind of ore:* Limonite. *Remarks:* From washed ore at washer. | | *State:* ALABAMA. *County:* Talladega. *Location:* Clifton bank, Sec. 26, T. 18, R. 6 E. *Analysis No.:* 242. *Sampler:* Chauvenet. *Chemist:* White. *Kind of ore:* Limonite. *Remarks:* From two pits 100 yards apart on bed No. 6. | |
| | | Natural ore. | Dried ore. | Natural ore. | Dried ore. | Natural ore. | Dried ore. | Natural ore. | Dried ore. |
| | Specific gravity | | | 3.458 | | 3.725 | | 3.732 | |
| | | *Per cent.* | *Per cent.* | *Per cent.* | *Per cent.* | *Per cent.* | *Per cent.* | *Per cent.* | *Per cent.* |
| 1 | Sulphur | 0.139 | 0.140 | 0.318 | 0.320 | 0.139 | 0.140 | 0.109 | 0.110 |
| 2 | Phosphorus | 0.219 | 0.220 | 0.170 | 0.181 | 0.241 | 0.243 | 0.041 | 0.041 |
| 3 | Iron, metallic | 51.25 | 51.60 | 46.59 | 47.00 | 52.82 | 53.26 | 52.22 | 52.51 |
| 1 | Silica | 16.59 | 16.70 | 15.07 | 15.20 | 6.62 | 6.68 | 9.42 | 9.47 |
| 2 | Iron, protoxide | 0.19 | 0.19 | 0.26 | 0.26 | 0.34 | 0.34 | 0.19 | 0.19 |
| 3 | Iron, peroxide | 72.84 | 73.33 | 65.89 | 66.46 | 74.88 | 75.54 | 74.31 | 74.73 |
| 4 | Alumina | 6.57 | 6.62 | 5.41 | 5.46 | 3.30 | 3.32 | 1.80 | 1.81 |
| 5 | Manganese, protoxide | 0.37 | 0.37 | 0.72 | 0.72 | 1.41 | 1.43 | 1.00 | 1.01 |
| 6 | Manganese, dioxide | | | | | | | | |
| 7 | Chromium, sesquioxide | | | | | | | | |
| 8 | Lime | 0.27 | 0.27 | 0.65 | 0.65 | 0.82 | 0.83 | 0.34 | 0.34 |
| 9 | Magnesia | 0.22 | 0.22 | 0.25 | 0.25 | 1.02 | 1.02 | 0.23 | 0.23 |
| 10 | Iron, disulphide | 0.26 | 0.262 | 0.595 | 0.600 | 0.260 | 0.262 | 0.119 | 0.120 |
| 11 | Iron, arsenide | | | | | | | | |
| 12 | Zinc, sulphide | | | | | | | | |
| 13 | Zinc, oxide | | | | | | | | |
| 14 | Barium, oxide | | | | | | | | |
| 15 | Nickel, sulphide | | | | | | | 0.14 | 0.14 |
| 16 | Nickel, oxide | | | | | | | | |
| 17 | Cobalt, sulphide | | | | | | | Trace. | Trace. |
| 18 | Cobalt, oxide | | | | | | | | |
| 19 | Copper, sulphide | | | | | | | Trace. | Trace. |
| 20 | Lead | | | | | | | | |
| 21 | Antimony, sulphide | | | | | | | | |
| 22 | Potassa | | | | | | | | |
| 23 | Soda | | | | | | | | |
| 24 | Carbonic acid | 0.07 | 0.07 | 0.57 | 0.57 | 0.25 | 0.25 | 0.34 | 0.34 |
| 25 | Sulphuric acid | | | | | | | | |
| 26 | Phosphoric acid | 0.501 | 0.504 | 0.410 | 0.414 | 0.551 | 0.556 | 0.934 | 0.939 |
| 27 | Titanic acid | | | | | | | | |
| 28 | Carbon in carbonaceous matter | 0.02 | 0.02 | 0.20 | 0.20 | 0.09 | 0.09 | 0.26 | 0.26 |
| 29 | Hygroscopic water | 0.65 | | 0.84 | | 0.87 | | 0.55 | |
| 30 | Water of composition | 1.52 | 1.53 | 9.23 | 9.30 | 9.62 | 9.70 | 10.55 | 10.60 |
| | Total | 100.071 | 100.086 | 100.095 | 100.084 | 100.031 | 100.018 | 100.183 | 100.179 |
| | ANALYSIS OF INSOLUBLE SILICEOUS MATTER. | | | | | | | | |
| | Per cent. of insoluble siliceous matter | 19.28 | 19.41 | 18.04 | 18.20 | 7.89 | 7.96 | 11.09 | 11.17 |
| 1 | Silica | 16.50 | 16.70 | 15.07 | 15.20 | 6.62 | 6.68 | 9.42 | 9.47 |
| 2 | Alumina | 2.52 | 2.54 | 2.89 | 2.92 | 1.17 | 1.18 | 1.50 | 1.51 |
| 3 | Iron, protoxide | | | | | | | | |
| 4 | Lime | 0.12 | 0.12 | 0.10 | 0.10 | 0.08 | 0.08 | 0.07 | 0.07 |
| 5 | Magnesia | 0.07 | 0.07 | 0.04 | 0.04 | 0.04 | 0.04 | 0.12 | 0.12 |
| 6 | Manganese, protoxide | | | | | | | | |
| 7 | Nickel, sulphide | | | | | | | | |
| 8 | Zinc, sulphide | | | | | | | | |
| 9 | Potassa | | | | | | | | |
| 10 | Soda | | | | | | | | |
| 11 | Phosphoric acid | | | | | | | | |
| 12 | Barium, sulphate | | | | | | | | |
| 13 | Titanic acid | | | | | | | | |
| 14 | Chromium sesquioxide | | | | | | | | |
| | Total | 19.30 | 19.43 | 18.10 | 18.26 | 7.91 | 7.98 | 11.11 | 11.17 |

TABLE 26.—*Complete analyses of iron ores.*

| 252 | | 267 | | 783 | | 433 | | 439 | | 472 | | |
|---|---|---|---|---|---|---|---|---|---|---|---|---|
| *State:* ALABAMA. *County:* Cherokee. *Location:* Tecumseh Iron Co., Sec. 18, T. 12, R. 12 E. *Analysis No.:* 252. *Sampler:* Chauvenet. *Chemist:* White. *Kind of ore:* Limonite. *Remarks:* From wagons direct from bank. | | *State:* ALABAMA. *County:* Etowah. *Location:* Attala, Sec. 34, T. 11, R. 5 E. *Analysis No.:* 267. *Sampler:* Chauvenet. *Chemist:* King. *Kind of ore:* Fossil. *Remarks:* From tunneled ore at mine. | | *State:* CONNECTICUT. *County:* Litchfield. *Location:* Brookpit (Old Hill), Salisbury. *Analysis No.:* 783. *Sampler:* Putnam. *Chemist:* Whitfield. *Kind of ore:* Limonite. *Remarks:* From five cars of rock ore at mine. | | *State:* GEORGIA. *County:* Bartow. *Location:* Wildcat bank, near Cartersville. *Analysis No.:* 433. *Sampler:* Willis. *Chemist:* White. *Kind of ore:* Limonite. *Remarks:* From pile of ore at Diamond furnace. | | *State:* GEORGIA. *County:* Bartow. *Location:* Mumford bank, Cartersville. *Analysis No.:* 439. *Sampler:* Willis. *Chemist:* King. *Kind of ore:* Limonite. *Remarks:* From bank. | | *State:* GEORGIA. *County:* Bartow. *Location:* Gray ore bank, Etowah river. *Analysis No.:* 472. *Sampler:* Willis. *Chemist:* King. *Kind of ore:* Specular. *Remarks:* From vein in new opening. | | |
| Natural ore. | Dried ore. | Natural ore. | Dried ore. | Natural ore. | Dried ore. | Natural ore. | Dried ore. | Natural ore. | Dried ore. | Natural ore. | Dried ore. | |
| 3.706 | ..... | 4.110 | ..... | ..... | ..... | 3.634 | ..... | 3.863 | ..... | 4.445 | ..... | |
| *Per cent.* | *Per cent.* | *Per cent.* | *Per cent.* | *Per cent.* | *Per cent.* | *Per cent.* | *Per cent.* | *Per cent.* | *Per cent.* | *Per cent.* | *Per cent.* | |
| 0.179 | 0.180 | 0.085 | 0.086 | 0.150 | 0.151 | 0.170 | 0.180 | 0.008 | 0.008 | 0.006 | 0.006 | 1 |
| 0.108 | 0.108 | 0.641 | 0.648 | 0.196 | 0.198 | 0.668 | 0.672 | 0.330 | 0.331 | 0.010 | 0.010 | 2 |
| 50.04 | 50.25 | 53.60 | 54.15 | 50.12 | 50.53 | 50.64 | 50.96 | 55.60 | 55.87 | 57.00 | 57.00 | 3 |
| 11.23 | 11.28 | 10.52 | 10.63 | 9.84 | 9.92 | 8.94 | 9.00 | 4.49 | 4.50 | 16.67 | 16.67 | 1 |
| 0.22 | 0.22 | 0.46 | 0.46 | 0.25 | 0.25 | 0.34 | 0.34 | 0.48 | 0.48 | 0.44 | 0.44 | 2 |
| 71.15 | 71.45 | 75.90 | 76.77 | 69.46 | 70.03 | 71.82 | 72.28 | 79.01 | 79.27 | 80.95 | 80.95 | 3 |
| 4.00 | 5.01 | 5.58 | 5.64 | 3.65 | 3.68 | 4.24 | 4.27 | 4.73 | 4.75 | 1.34 | 1.34 | 4 |
| ..... | ..... | 0.23 | 0.23 | 1.27 | 1.28 | 0.42 | 0.42 | Trace. | Trace. | Trace. | Trace. | 5 |
| ..... | ..... | ..... | ..... | ..... | ..... | ..... | ..... | ..... | ..... | ..... | ..... | 6 |
| ..... | ..... | ..... | ..... | ..... | ..... | ..... | ..... | ..... | ..... | ..... | ..... | 7 |
| 0.25 | 0.25 | 2.23 | 2.25 | 1.12 | 1.13 | 1.08 | 1.09 | 0.17 | 0.17 | 0.09 | 0.09 | 8 |
| 0.25 | 0.25 | 0.52 | 0.52 | 0.86 | 0.87 | 0.63 | 0.63 | 0.21 | 0.21 | 0.11 | 0.11 | 9 |
| 0.337 | 0.338 | 0.124 | 0.125 | 0.270 | 0.281 | 0.335 | 0.337 | ..... | ..... | ..... | ..... | 10 |
| ..... | ..... | ..... | ..... | ..... | ..... | ..... | ..... | ..... | ..... | ..... | ..... | 11 |
| ..... | ..... | ..... | ..... | ..... | ..... | ..... | ..... | ..... | ..... | ..... | ..... | 12 |
| ..... | ..... | ..... | ..... | ..... | ..... | ..... | ..... | ..... | ..... | ..... | ..... | 13 |
| ..... | ..... | ..... | ..... | ..... | ..... | ..... | ..... | ..... | ..... | ..... | ..... | 14 |
| ..... | ..... | ..... | ..... | ..... | ..... | ..... | ..... | ..... | ..... | ..... | ..... | 15 |
| ..... | ..... | ..... | ..... | ..... | ..... | ..... | ..... | ..... | ..... | ..... | ..... | 16 |
| ..... | ..... | ..... | ..... | ..... | ..... | ..... | ..... | ..... | ..... | ..... | ..... | 17 |
| ..... | ..... | ..... | ..... | ..... | ..... | ..... | ..... | ..... | ..... | ..... | ..... | 18 |
| ..... | ..... | ..... | ..... | ..... | ..... | ..... | ..... | ..... | ..... | ..... | ..... | 19 |
| ..... | ..... | ..... | ..... | ..... | ..... | ..... | ..... | ..... | ..... | ..... | ..... | 20 |
| ..... | ..... | ..... | ..... | ..... | ..... | ..... | ..... | ..... | ..... | ..... | ..... | 21 |
| 0.14 | 0.14 | 0.17 | 0.17 | 0.69 | 0.70 | ..... | ..... | ..... | ..... | ..... | ..... | 22 |
| 0.11 | 0.11 | 0.01 | 0.01 | 0.44 | 0.44 | ..... | ..... | ..... | ..... | ..... | ..... | 23 |
| 0.13 | 0.13 | 0.00 | 0.00 | 0.14 | 0.14 | 0.40 | 0.40 | 0.00 | 0.00 | 0.00 | 0.00 | 24 |
| ..... | ..... | 0.05 | 0.05 | 0.04 | 0.04 | ..... | ..... | 0.02 | 0.02 | 0.02 | 0.02 | 25 |
| 0.246 | 0.247 | 1.469 | 1.484 | 0.450 | 0.454 | 1.528 | 1.538 | 0.756 | 0.758 | 0.024 | 0.024 | 26 |
| ..... | ..... | ..... | ..... | ..... | ..... | ..... | ..... | ..... | ..... | ..... | ..... | 27 |
| 0.25 | 0.25 | 0.04 | 0.04 | 0.06 | 0.06 | 0.01 | 0.01 | 0.08 | 0.08 | 0.01 | 0.01 | 28 |
| 0.42 | ..... | 1.02 | ..... | 0.81 | ..... | 0.63 | ..... | 0.33 | ..... | ..... | ..... | 29 |
| 10.20 | 10.24 | 1.60 | 1.71 | 10.67 | 10.75 | 9.60 | 9.75 | 9.69 | 9.72 | 0.31 | 0.31 | 30 |
| 99.923 | 99.915 | 100.103 | 100.170 | 100.029 | 100.025 | 100.063 | 100.065 | 100.056 | 100.048 | 100.054 | 100.054 | |
| 15.14 | 15.20 | 13.31 | 13.44 | 12.69 | 12.79 | 11.67 | 11.74 | 6.95 | 6.97 | 17.55 | 17.55 | |
| 11.23 | 11.28 | 10.52 | 10.63 | 9.84 | 9.92 | 8.94 | 9.00 | 4.49 | 4.50 | 16.67 | 16.67 | 1 |
| 3.30* | 3.31* | 2.35 | 2.37 | 2.01* | 2.03* | 2.29 | 2.30 | 2.17 | 2.18 | 0.81 | 0.81 | 2 |
| ..... | ..... | ..... | ..... | ..... | ..... | ..... | ..... | ..... | ..... | ..... | ..... | 3 |
| 0.15 | 0.15 | 0.05 | 0.05 | 0.14 | 0.14 | 0.19 | 0.19 | 0.04 | 0.04 | 0.01 | 0.01 | 4 |
| 0.16 | 0.16 | 0.20 | 0.20 | 0.20 | 0.20 | 0.27 | 0.27 | 0.21 | 0.21 | 0.05 | 0.05 | 5 |
| ..... | ..... | ..... | ..... | ..... | ..... | ..... | ..... | ..... | ..... | ..... | ..... | 6 |
| ..... | ..... | ..... | ..... | ..... | ..... | ..... | ..... | ..... | ..... | ..... | ..... | 7 |
| ..... | ..... | ..... | ..... | ..... | ..... | ..... | ..... | ..... | ..... | ..... | ..... | 8 |
| 0.14 | 0.14 | 0.17 | 0.17 | 0.41 | 0.41 | ..... | ..... | ..... | ..... | ..... | ..... | 9 |
| 0.11 | 0.11 | 0.01 | 0.01 | ..... | ..... | ..... | ..... | ..... | ..... | ..... | ..... | 10 |
| ..... | ..... | ..... | ..... | ..... | ..... | ..... | ..... | ..... | ..... | ..... | ..... | 11 |
| ..... | ..... | ..... | ..... | ..... | ..... | ..... | ..... | ..... | ..... | ..... | ..... | 12 |
| ..... | ..... | ..... | ..... | ..... | ..... | ..... | ..... | ..... | ..... | ..... | ..... | 13 |
| ..... | ..... | ..... | ..... | ..... | ..... | ..... | ..... | ..... | ..... | ..... | ..... | 14 |
| 15.00 | 15.15 | 13.30 | 13.43 | 12.69 | 12.79 | 11.60 | 11.76 | 6.91 | 6.93 | 17.54 | 17.54 | |

* With trace of oxide of iron.

TABLE 26.—*Complete analyses of iron ores*—Continued.

| | | 474 | | 814 | | 677 | | 1 | |
|---|---|---|---|---|---|---|---|---|---|
| | | *State:* GEORGIA. *County:* Walker. (?) *Location:* Snake Creek bank, Snake Creek gap. *Analysis No.:* 474. *Sampler:* Willis. *Chemist:* King. *Kind of ore:* Limonite. *Remarks:* From exposure of ore in old pit. | | *State:* KENTUCKY. *County:* Lawrence. *Location:* Shepherd bank, Hunnewell furnace. *Analysis No.:* 814. *Sampler:* Chauvenet. *Chemist:* King. *Kind of ore:* Carbonate. *Remarks:* From "red-lime" ore in bank. | | *State:* MAINE. *County:* Piscataquis. *Location:* Katahdin iron works. *Analysis No.:* 677. *Sampler:* Benton. *Chemist:* Richmond. *Kind of ore:* Limonite. *Remarks:* From pile of raw ore at furnace and from three excavations one mile west of furnace. | | *State:* MICHIGAN. *County:* Marquette. *Location:* Michigammo mine. *Analysis No.:* 1. *Sampler:* Putnam. *Chemist:* Blair. *Kind of ore:* Magnetite. *Remarks:* From stope, pit No. 4, fourth level, 130 feet east of shaft. | |
| | | Natural ore. | Dried ore. | Natural ore. | Dried ore. | Natural ore. | Dried ore. | Natural ore. | Dried ore. |
| | Specific gravity | 3.662 | | | | | | | |
| | | *Per cent.* | *Per cent.* | *Per cent.* | *Per cent.* | *Per cent.* | *Per cent.* | *Per cent.* | *Per cent.* |
| 1 | Sulphur | 0.258 | 0.261 | 0.227 | 0.227 | 3.004 | 3.127 | 0.103 | 0.103 |
| 2 | Phosphorus | 1.359 | 1.372 | 0.126 | 0.128 | 0.009 | 0.009 | 0.095 | 0.095 |
| 3 | Iron, metallic | 51.41 | 51.98 | 40.61 | 40.85 | 46.00 | 47.88 | 63.55 | 63.58 |
| 1 | Silica | 5.99 | 6.06 | 14.37 | 14.59 | 8.50 | 8.85 | 5.24 | 5.24 |
| 2 | Iron, protoxide | 0.38 | 0.38 | 4.93 | 5.01 | 3.32 | 3.45 | 28.52 | 28.53 |
| 3 | Iron, peroxide | 72.98 | 73.78 | 53.93 | 54.75 | 59.95 | 62.30 | 58.99 | 59.01 |
| 4 | Alumina | 5.36 | 5.42 | 9.36 | 9.50 | 2.08 | 2.16 | 2.95 | 2.95 |
| 5 | Manganese, protoxide | Trace. | Trace. | 1.26 | 1.28 | 0.02 | 0.02 | 0.34 | 0.34 |
| 6 | Manganese, dioxide | | | | | | | | |
| 7 | Chromium, sesquioxide | | | | | 0.19 | 0.20 | | |
| 8 | Lime | | | 1.03 | 1.05 | 1.50 | 1.56 | 0.94 | 0.94 |
| 9 | Magnesia | 0.24 | 0.24 | 0.52 | 0.53 | 1.96 | 2.04 | 0.78 | 0.78 |
| 10 | Iron, disulphide | 0.071 | 0.071 | 0.072 | 0.073 | 3.270 | 3.400 | 0.193 | 0.193 |
| 11 | Iron, arsenide | | | | | | | | |
| 12 | Zinc, sulphide | 0.21 | 0.21 | | | | | | |
| 13 | Zinc, oxide | | | | | | | | |
| 14 | Barium, oxide | | | | | | | | |
| 15 | Nickel, sulphide | | | 0.25 | 0.25 | 0.13 | 0.14 | | |
| 16 | Nickel, oxide | | | | | | | | |
| 17 | Cobalt, sulphide | | | 0.21 | 0.21 | | | | |
| 18 | Cobalt, oxide | | | | | | | | |
| 19 | Copper, sulphide | | | 0.03 | 0.03 | 0.06 | 0.06 | | |
| 20 | Lead | | | | | | | | |
| 21 | Antimony, sulphide | | | | | | | | |
| 22 | Potassa | | | | | 0.12 | 0.12 | | |
| 23 | Soda | | | | | 0.28 | 0.29 | | |
| 24 | Carbonic acid | 0.11 | 0.11 | 3.66 | 3.72 | 0.08 | 0.08 | 1.10 | 1.10 |
| 25 | Sulphuric acid | | | 0.02 | 0.02 | 3.05 | 3.17 | | |
| 26 | Phosphoric acid | 3.106 | 3.140 | 0.290 | 0.294 | 0.020 | 0.021 | 0.217 | 0.217 |
| 27 | Titanic acid | | | | | | | | |
| 28 | Carbon in carbonaceous matter | 0.06 | 0.06 | 0.15 | 0.15 | 0.27 | 0.28 | 0.05 | 0.05 |
| 29 | Hygroscopic water | 1.09 | | 1.49 | | 3.80 | | 0.04 | |
| 30 | Water of composition | 10.49 | 10.60 | 8.54 | 8.66 | 11.46 | 11.87 | 0.72 | 0.72 |
| | Total | 100.087 | 100.071 | 100.112 | 100.117 | 100.120 | 100.011 | 100.080 | 100.070 |
| | ANALYSIS OF INSOLUBLE SILICEOUS MATTER. | | | | | | | | |
| | Per cent. of insoluble siliceous matter | 7.20 | 7.28 | 19.43 | 19.73 | 12.69 | 13.17 | 6.24 | 6.24 |
| 1 | Silica | 5.99 | 6.06 | 14.37 | 14.59 | 8.50 | 8.85 | 5.24 | 5.24 |
| 2 | Alumina | 1.14 | 1.15 | 4.98 | 5.06 | 2.15 | 2.20 | 0.80 | 0.80 |
| 3 | Iron, protoxide | | | | | | | | |
| 4 | Lime | | | | | 0.58 | 0.60 | | |
| 5 | Magnesia | 0.07 | 0.07 | 0.07 | 0.07 | 1.51 | 1.57 | 0.19 | 0.19 |
| 6 | Manganese, protoxide | | | | | | | | |
| 7 | Nickel, sulphide | | | | | | | | |
| 8 | Zinc, sulphide | | | | | | | | |
| 9 | Potassa | | | | | | | | |
| 10 | Soda | | | | | | | | |
| 11 | Phosphoric acid | | | | | | | | |
| 12 | Barium, sulphate | | | | | | | | |
| 13 | Titanic acid | | | | | | | | |
| 14 | Chromium, sesquioxide | | | | | | | | |
| | Total | 7.20 | 7.28 | 19.42 | 19.72 | 12.74 | 13.22 | 6.23 | 6.23 |

TABLE 26.—*Complete analyses of iron ores*—Continued.

| 4 | | 5 | | 7 | | 10 | | 16 | | 17 | | |
|---|---|---|---|---|---|---|---|---|---|---|---|---|
| *State:* MICHIGAN. *County:* Marquette. *Location:* Michigamme mine. *Analysis No.:* 4. *Sampler:* Putnam. *Chemist:* Blair. *Kind of ore:* Magnetite. *Remarks:* From winze 100 feet west of shaft No. 1, 35 feet below surface. | | *State:* MICHIGAN. *County:* Marquette. *Location:* Republic mine. *Analysis No.:* 5. *Sampler:* Putnam. *Chemist:* Gooch. *Kind of ore:* Specular. *Remarks:* From pillar in pit No. 5, fourth level, 70 ft. south from shaft, from foot-wall to schist "horse." | | *State:* MICHIGAN. *County:* Marquette. *Location:* Republic mine. *Analysis No.:* 7. *Sampler:* Putnam. *Chemist:* Gooch. *Kind of ore:* Magnetite. *Remarks:* From same pillar as sample No. 5, from schist "horse" to hanging-wall. | | *State:* MICHIGAN. *County:* Marquette. *Location:* Boston mine. *Analysis No.:* 10. *Sampler:* Fay. *Chemist:* Gooch. *Kind of ore:* Specular. *Remarks:* Average of output. | | *State:* MICHIGAN. *County:* Menominee. *Location:* Quinnesec mine. *Analysis No.:* 16. *Sampler:* Putnam. *Chemist:* Blair. *Kind of ore:* Soft specular. *Remarks:* From stope, pit No. 2, third level. | | *State:* MICHIGAN. *County:* Menominee. *Location:* Quinnesec mine. *Analysis No.:* 17. *Sampler:* Putnam. *Chemist:* Blair. *Kind of ore:* Soft specular. *Remarks:* From stope, pit No. 2, near hanging-wall; ore with greenish mineral. | | |
| Natural ore. | Dried ore. | Natural ore. | Dried ore. | Natural ore. | Dried ore. | Natural ore. | Dried ore. | Natural ore. | Dried ore. | Natural ore. | Dried ore. | |
| 4.865 | ..... | 5.113 | ..... | 5.071 | ..... | ..... | ..... | 4.204 | ..... | 4.146 | ..... | |
| *Per cent.* | *Per cent.* | *Per cent.* | *Per cent.* | *Per cent.* | *Per cent.* | *Per cent.* | *Per cent.* | *Per cent.* | *Per cent.* | *Per cent.* | *Per cent.* | |
| 0.027 | 0.027 | 0.037 | 0.037 | 0.050 | 0.050 | 0.007 | 0.007 | 0.050 | 0.050 | 0.059 | 0.059 | 1 |
| 0.053 | 0.053 | 0.024 | 0.024 | 0.051 | 0.051 | 0.009 | 0.009 | 0.010 | 0.010 | 0.009 | 0.009 | 2 |
| 65.24 | 65.25 | 67.02 | 67.02 | 69.62 | 69.69 | 66.36 | 66.37 | 61.81 | 61.93 | 55.49 | 55.58 | 3 |
| 5.78 | 5.78 | 3.38 | 3.38 | 1.41 | 1.41 | 2.61 | 2.61 | 7.37 | 7.38 | 9.20 | 9.31 | 1 |
| 29.94 | 29.94 | 1.05 | 1.05 | 20.87 | 20.89 | 1.26 | 1.26 | 1.97 | 1.97 | 2.87 | 2.87 | 2 |
| 59.89 | 59.91 | 94.58 | 94.58 | 76.27 | 76.35 | 93.39 | 93.41 | 86.05 | 86.22 | 76.02 | 76.14 | 3 |
| 2.20 | 2.20 | 0.38 | 0.38 | 0.52 | 0.52 | 1.59 | 1.59 | 1.81 | 1.81 | 4.68 | 4.69 | 4 |
| 0.16 | 0.16 | ..... | ..... | ..... | ..... | ..... | ..... | ..... | ..... | ..... | ..... | 5 |
| ..... | ..... | ..... | ..... | ..... | ..... | ..... | ..... | ..... | ..... | ..... | ..... | 6 |
| ..... | ..... | ..... | ..... | ..... | ..... | ..... | ..... | ..... | ..... | ..... | ..... | 7 |
| 0.27 | 0.27 | 0.03 | 0.03 | 0.13 | 0.13 | 0.04 | 0.04 | 0.41 | 0.41 | 0.27 | 0.27 | 8 |
| 0.63 | 0.63 | 0.33 | 0.33 | 0.25 | 0.25 | ..... | ..... | 0.84 | 0.84 | 3.54 | 3.55 | 9 |
| 0.051 | 0.051 | 0.067 | 0.067 | 0.094 | 0.094 | 0.013 | 0.013 | 0.090 | 0.090 | 0.110 | 0.110 | 10 |
| ..... | ..... | ..... | ..... | ..... | ..... | ..... | ..... | ..... | ..... | ..... | ..... | 11 |
| ..... | ..... | ..... | ..... | ..... | ..... | ..... | ..... | ..... | ..... | ..... | ..... | 12 |
| ..... | ..... | ..... | ..... | ..... | ..... | ..... | ..... | ..... | ..... | ..... | ..... | 13 |
| ..... | ..... | ..... | ..... | ..... | ..... | ..... | ..... | ..... | ..... | ..... | ..... | 14 |
| ..... | ..... | ..... | ..... | ..... | ..... | ..... | ..... | ..... | ..... | ..... | ..... | 15 |
| ..... | ..... | ..... | ..... | ..... | ..... | ..... | ..... | ..... | ..... | ..... | ..... | 16 |
| ..... | ..... | ..... | ..... | ..... | ..... | ..... | ..... | ..... | ..... | ..... | ..... | 17 |
| ..... | ..... | ..... | ..... | ..... | ..... | ..... | ..... | ..... | ..... | ..... | ..... | 18 |
| ..... | ..... | ..... | ..... | ..... | ..... | ..... | ..... | ..... | ..... | ..... | ..... | 19 |
| ..... | ..... | ..... | ..... | ..... | ..... | ..... | ..... | ..... | ..... | ..... | ..... | 20 |
| ..... | ..... | ..... | ..... | ..... | ..... | ..... | ..... | ..... | ..... | ..... | ..... | 21 |
| ..... | ..... | ..... | ..... | ..... | ..... | 0.31 | 0.31 | 0.55 | 0.55 | 0.99 | 0.99 | 22 |
| ..... | ..... | ..... | ..... | ..... | ..... | 0.07 | 0.07 | ..... | ..... | 0.02 | 0.02 | 23 |
| 0.17 | 0.17 | 0.08 | 0.08 | 0.05 | 0.05 | 0.08 | 0.08 | 0.19 | 0.19 | 0.30 | 0.30 | 24 |
| ..... | ..... | ..... | ..... | ..... | ..... | ..... | ..... | ..... | ..... | ..... | ..... | 25 |
| 0.121 | 0.121 | 0.055 | 0.055 | 0.117 | 0.117 | 0.022 | 0.022 | 0.024 | 0.024 | 0.021 | 0.021 | 26 |
| ..... | ..... | ..... | ..... | ..... | ..... | ..... | ..... | ..... | ..... | ..... | ..... | 27 |
| ..... | ..... | ..... | ..... | 0.01 | 0.01 | ..... | ..... | ..... | ..... | ..... | ..... | 28 |
| 0.02 | ..... | ..... | ..... | 0.10 | ..... | 0.02 | ..... | 0.20 | ..... | 0.16 | ..... | 29 |
| 0.88 | 0.88 | 0.14 | 0.14 | 0.20 | 0.20 | 0.65 | 0.65 | 0.50 | 0.50 | 1.72 | 1.72 | 30 |
| 100.112 | 100.112 | 100.092 | 100.092 | 100.021 | 100.021 | 100.055 | 100.055 | 100.004 | 99.984 | 99.991 | 99.991 | |
| 6.11 | 6.11 | 3.59 | 3.59 | 1.79 | 1.79 | 4.88 | 4.88 | 8.94 | 8.96 | 12.00 | 12.02 | |
| 5.78 | 5.78 | 3.38 | 3.38 | 1.41 | 1.41 | 2.61 | 2.61 | 7.37 | 7.38 | 9.20 | 9.31 | 1 |
| 0.34 | 0.34 | 0.21* | 0.21* | 0.40* | 0.40* | 1.84 | 1.84 | 0.93 | 0.93 | 1.61 | 1.61 | 2 |
| ..... | ..... | ..... | ..... | ..... | ..... | ..... | ..... | ..... | ..... | ..... | ..... | 3 |
| ..... | ..... | ..... | ..... | ..... | ..... | 0.04 | 0.04 | 0.14 | 0.14 | 0.09 | 0.09 | 4 |
| ..... | ..... | ..... | ..... | ..... | ..... | ..... | ..... | 0.05 | 0.05 | 0.09 | 0.09 | 5 |
| ..... | ..... | ..... | ..... | ..... | ..... | ..... | ..... | ..... | ..... | ..... | ..... | 6 |
| ..... | ..... | ..... | ..... | ..... | ..... | ..... | ..... | ..... | ..... | ..... | ..... | 7 |
| ..... | ..... | ..... | ..... | ..... | ..... | ..... | ..... | ..... | ..... | ..... | ..... | 8 |
| ..... | ..... | ..... | ..... | ..... | ..... | 0.31 | 0.31 | 0.46 | 0.46 | 0.93 | 0.93 | 9 |
| ..... | ..... | ..... | ..... | ..... | ..... | 0.07 | 0.07 | ..... | ..... | ..... | ..... | 10 |
| ..... | ..... | ..... | ..... | ..... | ..... | ..... | ..... | ..... | ..... | ..... | ..... | 11 |
| ..... | ..... | ..... | ..... | ..... | ..... | ..... | ..... | ..... | ..... | ..... | ..... | 12 |
| ..... | ..... | ..... | ..... | ..... | ..... | ..... | ..... | ..... | ..... | ..... | ..... | 13 |
| ..... | ..... | ..... | ..... | ..... | ..... | ..... | ..... | ..... | ..... | ..... | ..... | 14 |
| 6.12 | 6.12 | 3.59 | 3.59 | 1.81 | 1.81 | 4.87 | 4.87 | 8.95 | 8.96 | 12.01 | 12.03 | |

* With trace of oxide of iron.

TABLE 26.—*Complete analyses of iron ores*—Continued.

| | | 18 | | 19 | | 20 | | 22 | |
|---|---|---|---|---|---|---|---|---|---|
| | | *State:* MICHIGAN. *County:* Menominee. *Location:* Quinnesec mine. *Analysis No.:* 18. *Sampler:* Putnam. *Chemist:* Blair. *Kind of ore:* Soft specular. *Remarks:* From stope, pit No. 1, third level. | | *State:* MICHIGAN. *County:* Menominee. *Location:* Quinnesec mine. *Analysis No.:* 19. *Sampler:* Putnam. *Chemist:* Blair. *Kind of ore:* Soft specular. *Remarks:* Selected clippings of "hard ore" in pit No. 1. | | *State:* MICHIGAN. *County:* Menominee. *Location:* Quinnesec mine. *Analysis No.:* 20. *Sampler:* Putnam. *Chemist:* Blair. *Kind of ore:* Soft specular. *Remarks:* From stope, pit No. 3, third level. | | *State:* MICHIGAN. *County:* Menominee. *Location:* Cornell mine. *Analysis No.:* 22. *Sampler:* Putnam. *Chemist:* Blair. *Kind of ore:* Hematite. *Remarks:* Across vein of "red ore" exposed in stripping. | |
| | | Natural ore. | Dried ore. | Natural ore. | Dried ore. | Natural ore. | Dried ore. | Natural ore. | Dried ore. |
| | Specific gravity | 4.701 | ..... | 4.882 | ..... | 4.518 | ..... | 4.694 | ..... |
| | | *Per cent.* | *Per cent.* | *Per cent.* | *Per cent.* | *Per cent.* | *Per cent.* | *Per cent.* | *Per cent.* |
| 1 | Sulphur | 0.026 | 0.026 | 0.050 | 0.050 | 0.053 | 0.053 | 0.059 | 0.059 |
| 2 | Phosphorus | 0.012 | 0.012 | 0.005 | 0.005 | 0.009 | 0.009 | 0.043 | 0.043 |
| 3 | Iron, metallic | 66.39 | 66.40 | 64.47 | 64.47 | 65.00 | 65.63 | 58.06 | 58.12 |
| 1 | Silica | 2.58 | 2.58 | 6.99 | 6.99 | 3.03 | 3.03 | 9.04 | 9.05 |
| 2 | Iron, protoxide | 1.81 | 1.81 | 2.36 | 2.36 | 1.97 | 1.97 | 1.10 | 1.10 |
| 3 | Iron, peroxide | 92.73 | 92.74 | 89.41 | 89.41 | 91.47 | 91.51 | 81.64 | 81.73 |
| 4 | Alumina | 0.86 | 0.86 | 0.35 | 0.35 | 1.53 | 1.53 | 3.83 | 3.83 |
| 5 | Manganese, protoxide | Trace. | Trace. | Trace. | Trace. | ..... | ..... | ..... | ..... |
| 6 | Manganese, dioxide | ..... | ..... | ..... | ..... | ..... | ..... | ..... | ..... |
| 7 | Chromium, sesquioxide | ..... | ..... | ..... | ..... | ..... | ..... | ..... | ..... |
| 8 | Lime | 0.50 | 0.50 | 0.29 | 0.29 | 0.36 | 0.36 | 0.19 | 0.19 |
| 9 | Magnesia | 0.81 | 0.81 | 0.13 | 0.13 | 0.21 | 0.21 | 0.86 | 0.86 |
| 10 | Iron, disulphide | 0.161 | 0.161 | 0.093 | 0.093 | 0.090 | 0.090 | 0.111 | 0.111 |
| 11 | Iron, arsenide | ..... | ..... | ..... | ..... | ..... | ..... | ..... | ..... |
| 12 | Zinc, sulphide | ..... | ..... | ..... | ..... | ..... | ..... | ..... | ..... |
| 13 | Zinc, oxide | ..... | ..... | ..... | ..... | ..... | ..... | ..... | ..... |
| 14 | Barium, oxide | ..... | ..... | ..... | ..... | ..... | ..... | ..... | ..... |
| 15 | Nickel, sulphide | ..... | ..... | ..... | ..... | ..... | ..... | ..... | ..... |
| 16 | Nickel, oxide | ..... | ..... | ..... | ..... | ..... | ..... | ..... | ..... |
| 17 | Cobalt, sulphide | ..... | ..... | ..... | ..... | ..... | ..... | ..... | ..... |
| 18 | Cobalt, oxide | ..... | ..... | ..... | ..... | ..... | ..... | ..... | ..... |
| 19 | Copper, sulphide | ..... | ..... | ..... | ..... | ..... | ..... | ..... | ..... |
| 20 | Lead | ..... | ..... | ..... | ..... | ..... | ..... | ..... | ..... |
| 21 | Antimony, sulphide | ..... | ..... | ..... | ..... | ..... | ..... | ..... | ..... |
| 22 | Potassa | 0.37 | 0.37 | 0.05 | 0.05 | 0.57 | 0.57 | 1.54 | 1.54 |
| 23 | Soda | ..... | ..... | 0.03 | 0.03 | 0.03 | 0.03 | 0.17 | 0.17 |
| 24 | Carbonic acid | 0.38 | 0.38 | 0.24 | 0.24 | 0.38 | 0.38 | 0.18 | 0.18 |
| 25 | Sulphuric acid | ..... | ..... | ..... | ..... | ..... | ..... | ..... | ..... |
| 26 | Phosphoric acid | 0.027 | 0.027 | 0.013 | 0.013 | 0.021 | 0.021 | 0.09 | 0.09 |
| 27 | Titanic acid | ..... | ..... | ..... | ..... | ..... | ..... | ..... | ..... |
| 28 | Carbon in carbonaceous matter | ..... | ..... | ..... | ..... | ..... | ..... | ..... | ..... |
| 29 | Hygroscopic water | 0.01 | ..... | ..... | ..... | 0.04 | ..... | 0.11 | ..... |
| 30 | Water of composition | 0.30 | 0.30 | 0.01 | 0.01 | 0.27 | 0.27 | 1.13 | 1.13 |
| | Total | 100.038 | 100.038 | 99.966 | 99.966 | 99.980 | 99.980 | 99.998 | 99.988 |
| | ANALYSIS OF INSOLUBLE SILICEOUS MATTER. | | | | | | | | |
| | Per cent. of insoluble siliceous matter | 3.65 | 3.65 | 7.40 | 7.40 | 4.61 | 4.61 | 13.61 | 13.62 |
| 1 | Silica | 2.58 | 2.58 | 6.99 | 6.99 | 3.03 | 3.03 | 9.04 | 9.05 |
| 2 | Alumina | 0.70 | 0.70 | 0.25 | 0.25 | 0.93 | 0.93 | 2.77 | 2.77 |
| 3 | Iron, protoxide | ..... | ..... | ..... | ..... | ..... | ..... | ..... | ..... |
| 4 | Lime | 0.01 | 0.01 | 0.02 | 0.02 | 0.07 | 0.07 | 0.01 | 0.01 |
| 5 | Magnesia | 0.12 | 0.12 | 0.05 | 0.05 | 0.06 | 0.06 | 0.26 | 0.26 |
| 6 | Manganese, protoxide | ..... | ..... | ..... | ..... | ..... | ..... | ..... | ..... |
| 7 | Nickel, sulphide | ..... | ..... | ..... | ..... | ..... | ..... | ..... | ..... |
| 8 | Zinc, sulphide | ..... | ..... | ..... | ..... | ..... | ..... | ..... | ..... |
| 9 | Potassa | 0.30 | 0.30 | 0.05 | 0.05 | 0.51 | 0.51 | 1.44 | 1.44 |
| 10 | Soda | ..... | ..... | 0.03 | 0.03 | 0.03 | 0.03 | 0.11 | 0.11 |
| 11 | Phosphoric acid | ..... | ..... | ..... | ..... | ..... | ..... | ..... | ..... |
| 12 | Barium, sulphate | ..... | ..... | ..... | ..... | ..... | ..... | ..... | ..... |
| 13 | Titanic acid | ..... | ..... | ..... | ..... | ..... | ..... | ..... | ..... |
| 14 | Chromium, sesquioxide | ..... | ..... | ..... | ..... | ..... | ..... | ..... | ..... |
| | Total | 3.71 | 3.71 | 7.39 | 7.39 | 4.63 | 4.63 | 13.63 | 13.64 |

TABLE 26.—*Complete analyses of iron ores*—Continued.

| 23 | | 25 | | 26 | | 31 | | 37 | | 40 | | |
|---|---|---|---|---|---|---|---|---|---|---|---|---|
| *State:* MICHIGAN. *County:* Menominee. *Location:* Cornell mine. *Analysis No.:* 23. *Sampler:* Putnam. *Chemist:* Blair. *Kind of ore:* Soft specular. *Remarks:* Across vein of "blue ore" exposed in stripping. | | *State:* MICHIGAN. *County:* Menominee. *Location:* Chapin mine. *Analysis No.:* 25. *Sampler:* Putnam. *Chemist:* Gooch. *Kind of ore:* Hematite. *Remarks:* From near foot-wall at bottom of shaft No. 2. | | *State:* MICHIGAN. *County:* Menominee. *Location:* Chapin mine. *Analysis No.:* 26. *Sampler:* Putnam. *Chemist:* Gooch. *Kind of ore:* Soft specular. *Remarks:* From 900 tons of ore from shaft No. 3. | | *State:* MICHIGAN. *County:* Menominee. *Location:* Norway mine. *Analysis No.:* 31. *Sampler:* Putnam. *Chemist:* Pitman. *Kind of ore:* Specular. *Remarks:* Fragments from line of test pits extending west from top of new incline. | | *State:* MICHIGAN. *County:* Menominee. *Location:* Norway mine. *Analysis No.:* 37. *Sampler:* Putnam. *Chemist:* Pitman. *Kind of ore:* Hematite. *Remarks:* From stope and broken ore in pit No. 6; ore with yellowish-green mineral. | | *State:* MICHIGAN. *County:* Menominee. *Location:* Norway mine. *Analysis No.:* 40. *Sampler:* Putnam. *Chemist:* Pitman. *Kind of ore:* Hematite. *Remarks:* From 75 tons of ore from pit No. 2. | | |
| Natural ore. | Dried ore. | Natural ore. | Dried ore. | Natural ore. | Dried ore. | Natural ore. | Dried ore. | Natural ore. | Dried ore. | Natural ore. | Dried ore. | |
| ..... | ..... | 4.534 | ..... | 4.404 | ..... | ..... | ..... | 4.894 | ..... | 3.926 | ..... | |
| *Per cent.* | *Per cent.* | *Per cent.* | *Per cent.* | *Per cent.* | *Per cent.* | *Per cent.* | *Per cent.* | *Per cent.* | *Per cent.* | *Per cent.* | *Per cent.* | |
| 0.078 | 0.078 | 0.018 | 0.018 | 0.001 | 0.001 | 0.043 | 0.043 | 0.058 | 0.058 | 0.058 | 0.058 | 1 |
| 0.032 | 0.032 | 0.011 | 0.011 | 0.007 | 0.007 | 0.047 | 0.047 | 0.084 | 0.084 | ..... | ..... | 2 |
| 56.99 | 57.03 | 62.65 | 62.77 | 65.97 | 66.02 | 60.20 | 60.20 | 62.73 | 62.90 | 51.09 | 51.14 | 3 |
| 10.71 | 10.72 | 4.42 | 4.43 | 3.23 | 3.23 | 12.43 | 12.43 | 3.42 | 3.43 | 11.88 | 11.89 | 1 |
| 1.10 | 1.10 | 1.81 | 1.81 | 0.81 | 0.81 | 0.68 | 0.68 | 0.82 | 0.82 | 3.77 | 3.77 | 2 |
| 80.09 | 80.15 | 87.47 | 87.64 | 93.34 | 93.41 | 85.10 | 85.10 | 88.77 | 89.01 | 68.74 | 68.80 | 3 |
| 3.88 | 3.88 | 2.37 | 2.37 | 1.03 | 1.03 | 0.02 | 0.02 | 2.37 | 2.38 | 5.40 | 5.40 | 4 |
| ..... | ..... | 0.25 | 0.25 | 0.03 | 0.03 | ..... | ..... | ..... | ..... | 0.03 | 0.03 | 5 |
| ..... | ..... | ..... | ..... | ..... | ..... | ..... | ..... | ..... | ..... | ..... | ..... | 6 |
| ..... | ..... | ..... | ..... | ..... | ..... | ..... | ..... | ..... | ..... | ..... | ..... | 7 |
| 0.17 | 0.17 | 0.26 | 0.26 | 0.06 | 0.06 | 0.68 | 0.68 | 1.10 | 1.10 | 0.93 | 0.93 | 8 |
| 0.48 | 0.48 | 1.58 | 1.58 | 0.45 | 0.45 | 0.21 | 0.21 | 1.44 | 1.44 | 5.55 | 5.56 | 9 |
| 0.146 | 0.146 | 0.034 | 0.034 | 0.002 | 0.002 | 0.080 | 0.080 | 0.109 | 0.109 | 0.109 | 0.109 | 10 |
| ..... | ..... | ..... | ..... | ..... | ..... | ..... | ..... | ..... | ..... | ..... | ..... | 11 |
| ..... | ..... | ..... | ..... | ..... | ..... | ..... | ..... | ..... | ..... | ..... | ..... | 12 |
| ..... | ..... | ..... | ..... | ..... | ..... | ..... | ..... | ..... | ..... | ..... | ..... | 13 |
| ..... | ..... | ..... | ..... | ..... | ..... | ..... | ..... | ..... | ..... | ..... | ..... | 14 |
| ..... | ..... | ..... | ..... | ..... | ..... | ..... | ..... | ..... | ..... | ..... | ..... | 15 |
| ..... | ..... | ..... | ..... | ..... | ..... | ..... | ..... | ..... | ..... | ..... | ..... | 16 |
| ..... | ..... | ..... | ..... | ..... | ..... | ..... | ..... | ..... | ..... | ..... | ..... | 17 |
| ..... | ..... | ..... | ..... | ..... | ..... | ..... | ..... | ..... | ..... | ..... | ..... | 18 |
| ..... | ..... | ..... | ..... | ..... | ..... | ..... | ..... | ..... | ..... | ..... | ..... | 19 |
| ..... | ..... | ..... | ..... | ..... | ..... | ..... | ..... | ..... | ..... | ..... | ..... | 20 |
| ..... | ..... | ..... | ..... | ..... | ..... | ..... | ..... | ..... | ..... | ..... | ..... | 21 |
| 2.20 | 2.20 | 0.38 | 0.38 | 0.53 | 0.53 | ..... | ..... | ..... | ..... | ..... | ..... | 22 |
| 0.30 | 0.30 | ..... | ..... | ..... | ..... | ..... | ..... | ..... | ..... | ..... | ..... | 23 |
| 0.08 | 0.08 | 0.12 | 0.12 | 0.11 | 0.11 | 0.40 | 0.40 | 0.50 | 0.50 | 0.13 | 0.13 | 24 |
| ..... | ..... | ..... | ..... | ..... | ..... | ..... | ..... | ..... | ..... | ..... | ..... | 25 |
| 0.074 | 0.074 | 0.026 | 0.026 | 0.017 | 0.017 | 0.108 | 0.108 | 0.192 | 0.192 | ..... | ..... | 26 |
| ..... | ..... | ..... | ..... | ..... | ..... | ..... | ..... | ..... | ..... | ..... | ..... | 27 |
| ..... | ..... | 0.01 | 0.01 | ..... | ..... | 0.006 | 0.006 | 0.006 | 0.006 | ..... | ..... | 28 |
| 0.07 | ..... | 0.19 | ..... | 0.07 | ..... | ..... | ..... | 0.27 | ..... | 0.09 | ..... | 29 |
| 0.56 | 0.56 | 1.12 | 1.12 | 0.39 | 0.39 | 0.284 | 0.284 | 1.21 | 1.21 | 3.52 | 3.52 | 30 |
| 99.950 | 99.950 | 100.040 | 100.030 | 100.069 | 100.069 | 100.088 | 100.088 | 100.207 | 100.197 | 100.239 | 100.220 | |
| 16.44 | 16.45 | 5.28 | 5.29 | 4.82 | 4.82 | 12.78 | 12.78 | 3.70 | 3.71 | 12.39 | 12.40 | |
| 10.71 | 10.72 | 4.42 | 4.43 | 3.23 | 3.23 | 12.43 | 12.43 | 3.42 | 3.43 | 11.88 | 11.89 | 1 |
| 3.21 | 3.21 | 0.64 | 0.64 | 1.06 | 1.06 | 0.26* | 0.26* | 0.12* | 0.12* | 0.31* | 0.31* | 2 |
| ..... | ..... | ..... | ..... | ..... | ..... | ..... | ..... | ..... | ..... | ..... | ..... | 3 |
| ..... | ..... | 0.01 | 0.01 | 0.02 | 0.02 | 0.07 | 0.07 | 0.26 | 0.26 | 0.19 | 0.19 | 4 |
| 0.08 | 0.08 | 0.03 | 0.03 | 0.05 | 0.05 | 0.03 | 0.03 | 0.02 | 0.02 | 0.04 | 0.04 | 5 |
| ..... | ..... | ..... | ..... | ..... | ..... | ..... | ..... | ..... | ..... | ..... | ..... | 6 |
| ..... | ..... | ..... | ..... | ..... | ..... | ..... | ..... | ..... | ..... | ..... | ..... | 7 |
| ..... | ..... | ..... | ..... | ..... | ..... | ..... | ..... | ..... | ..... | ..... | ..... | 8 |
| 2.23 | 2.23 | 0.20 | 0.20 | 0.50 | 0.50 | ..... | ..... | ..... | ..... | ..... | ..... | 9 |
| 0.20 | 0.20 | ..... | ..... | ..... | ..... | ..... | ..... | ..... | ..... | ..... | ..... | 10 |
| ..... | ..... | ..... | ..... | ..... | ..... | ..... | ..... | ..... | ..... | ..... | ..... | 11 |
| ..... | ..... | ..... | ..... | ..... | ..... | ..... | ..... | ..... | ..... | ..... | ..... | 12 |
| ..... | ..... | ..... | ..... | ..... | ..... | ..... | ..... | ..... | ..... | ..... | ..... | 13 |
| ..... | ..... | ..... | ..... | ..... | ..... | ..... | ..... | ..... | ..... | ..... | ..... | 14 |
| 16.43 | 16.44 | 5.30 | 5.31 | 4.86 | 4.86 | 12.79 | 12.79 | 3.82 | 3.83 | 12.42 | 12.43 | |

* With trace of oxide of iron.

TABLE 26.—*Complete analyses of iron ores*—Continued.

| | | 46 | | 60 | | 65 | | 68 | |
|---|---|---|---|---|---|---|---|---|---|
| | | *State:* MICHIGAN. *County:* Menominee. *Location:* Stephenson mine. *Analysis No.:* 46. *Sampler:* Putnam. *Chemist:* Gooch. *Kind of ore:* Specular. *Remarks:* From 75 tons of ore from shaft near property line. | | *State:* MICHIGAN. *County:* Menominee. *Location:* Vulcan mine. *Analysis No.:* 60. *Sampler:* Putnam. *Chemist:* Blair. *Kind of ore:* Soft specular. *Remarks:* From stope in E. shaft, pit No. 3, 59 feet below the surface. | | *State:* MICHIGAN. *County:* Menominee. *Location:* Vulcan mine. *Analysis No.:* 65. *Sampler:* Putnam. *Chemist:* Blair. *Kind of ore:* Soft specular. *Remarks:* From old stope in pit No. 1. | | *State:* MICHIGAN. *County:* Menominee. *Location:* McKenna mine, N. E. of S. E. Sec. 32, T. 40, R. 30. *Analysis No.:* 68. *Sampler:* Putnam. *Chemist:* Gooch. *Kind of ore:* Soft specular. *Remarks:* From 750 tons of ore from shaft. | |
| | | Natural ore. | Dried ore. | Natural ore. | Dried ore. | Natural ore. | Dried ore. | Natural ore. | Dried ore. |
| | Specific gravity | 4.621 | ..... | 5.036 | ..... | 4.371 | ..... | 4.187 | ..... |
| | | *Per cent.* | *Per cent.* | *Per cent.* | *Per cent.* | *Per cent.* | *Per cent.* | *Per cent.* | *Per cent.* |
| 1 | Sulphur | 0.004 | 0.004 | 0.050 | 0.050 | 0.023 | 0.023 | ..... | ..... |
| 2 | Phosphorus | 0.069 | 0.069 | 0.001 | 0.001 | 0.001 | 0.001 | 0.061 | 0.061 |
| 3 | Iron, metallic | 52.78 | 52.80 | 67.62 | 67.62 | 62.89 | 62.95 | 54.39 | 54.51 |
| 1 | Silica | 13.85 | 13.85 | 1.23 | 1.23 | 6.23 | 6.24 | 3.94 | 3.95 |
| 2 | Iron, protoxide | 2.97 | 2.97 | 1.19 | 1.19 | 1.06 | 1.06 | 1.36 | 1.36 |
| 3 | Iron, peroxide | 72.06 | 72.09 | 95.22 | 95.22 | 88.62 | 88.71 | 76.18 | 76.36 |
| 4 | Alumina | 3.39 | 3.39 | 0.74 | 0.74 | 1.98 | 1.98 | 1.18 | 1.18 |
| 5 | Manganese, protoxide | 0.11 | 0.11 | ..... | ..... | 0.02 | 0.02 | 0.17 | 0.17 |
| 6 | Manganese, dioxide | ..... | ..... | ..... | ..... | ..... | ..... | ..... | ..... |
| 7 | Chromium, sesquioxide | ..... | ..... | ..... | ..... | ..... | ..... | ..... | ..... |
| 8 | Lime | 0.33 | 0.33 | 0.21 | 0.21 | 0.13 | 0.13 | 4.87 | 4.88 |
| 9 | Magnesia | 4.29 | 4.29 | 0.50 | 0.50 | 0.61 | 0.61 | 3.60 | 3.61 |
| 10 | Iron, disulphide | 0.007 | 0.007 | 0.093 | 0.093 | 0.043 | 0.043 | ..... | ..... |
| 11 | Iron, arsenide | ..... | ..... | ..... | ..... | ..... | ..... | ..... | ..... |
| 12 | Zinc, sulphide | ..... | ..... | ..... | ..... | ..... | ..... | ..... | ..... |
| 13 | Zinc, oxide | ..... | ..... | ..... | ..... | ..... | ..... | ..... | ..... |
| 14 | Barium, oxide | ..... | ..... | ..... | ..... | ..... | ..... | ..... | ..... |
| 15 | Nickel, sulphide | ..... | ..... | ..... | ..... | ..... | ..... | ..... | ..... |
| 16 | Nickel, oxide | ..... | ..... | ..... | ..... | ..... | ..... | ..... | ..... |
| 17 | Cobalt, sulphide | ..... | ..... | ..... | ..... | ..... | ..... | ..... | ..... |
| 18 | Cobalt, oxide | ..... | ..... | ..... | ..... | ..... | ..... | ..... | ..... |
| 19 | Copper, sulphide | ..... | ..... | ..... | ..... | ..... | ..... | ..... | ..... |
| 20 | Lead | ..... | ..... | ..... | ..... | ..... | ..... | ..... | ..... |
| 21 | Antimony, sulphide | ..... | ..... | ..... | ..... | ..... | ..... | ..... | ..... |
| 22 | Potassa | ..... | ..... | 0.06 | 0.06 | 0.30 | 0.30 | ..... | ..... |
| 23 | Soda | ..... | ..... | ..... | ..... | ..... | ..... | ..... | ..... |
| 24 | Carbonic acid | 0.10 | 0.10 | 0.19 | 0.19 | 0.10 | 0.10 | 7.12 | 7.14 |
| 25 | Sulphuric acid | ..... | ..... | ..... | ..... | ..... | ..... | ..... | ..... |
| 26 | Phosphoric acid | 0.158 | 0.158 | 0.003 | 0.003 | 0.002 | 0.002 | 0.139 | 0.139 |
| 27 | Titanic acid | ..... | ..... | Trace. | Trace. | 0.075 | 0.075 | ..... | ..... |
| 28 | Carbon in carbonaceous matter | ..... | ..... | ..... | ..... | ..... | ..... | ..... | ..... |
| 29 | Hygroscopic water | 0.04 | ..... | ..... | ..... | 0.10 | ..... | 0.23 | ..... |
| 30 | Water of composition | 2.75 | 2.75 | 0.55 | 0.55 | 0.72 | 0.72 | 1.29 | 1.29 |
| | Total | 100.055 | 100.055 | 99.986 | 99.986 | 99.99 | 99.99 | 100.079 | 100.079 |
| | ANALYSIS OF INSOLUBLE SILICEOUS MATTER. | | | | | | | | |
| | Per cent. of insoluble siliceous matter | 14.26 | 14.27 | 1.55 | 1.55 | 7.31 | 7.32 | 4.08 | 4.09 |
| 1 | Silica | 13.85 | 13.86 | 1.23 | 1.23 | 6.23 | 6.24 | 3.94 | 3.95 |
| 2 | Alumina | 0.44* | 0.44* | 0.21 | 0.21 | 0.72 | 0.72 | 0.17 | 0.17 |
| 3 | Iron, protoxide | ..... | ..... | ..... | ..... | ..... | ..... | ..... | ..... |
| 4 | Lime | ..... | ..... | 0.02 | 0.02 | 0.04 | 0.04 | ..... | ..... |
| 5 | Magnesia | ..... | ..... | 0.01 | 0.01 | 0.05 | 0.05 | ..... | ..... |
| 6 | Manganese, protoxide | ..... | ..... | ..... | ..... | ..... | ..... | ..... | ..... |
| 7 | Nickel, sulphide | ..... | ..... | ..... | ..... | ..... | ..... | ..... | ..... |
| 8 | Zinc, sulphide | ..... | ..... | ..... | ..... | ..... | ..... | ..... | ..... |
| 9 | Potassa | ..... | ..... | 0.06 | 0.06 | 0.30 | 0.30 | ..... | ..... |
| 10 | Soda | ..... | ..... | ..... | ..... | ..... | ..... | ..... | ..... |
| 11 | Phosphoric acid | ..... | ..... | ..... | ..... | ..... | ..... | ..... | ..... |
| 12 | Barium, sulphate | ..... | ..... | ..... | ..... | ..... | ..... | ..... | ..... |
| 13 | Titanic acid | ..... | ..... | ..... | ..... | ..... | ..... | ..... | ..... |
| 14 | Chromium, sesquioxide | ..... | ..... | ..... | ..... | ..... | ..... | ..... | ..... |
| | Total | 14.29 | 14.30 | 1.53 | 1.53 | 7.34 | 7.35 | 4.11 | 4.12 |

* With trace of oxide of iron.

TABLE 26.—*Complete analyses of iron ores*—Continued.

| 86 | | 87 | | 88 | | 89 | | 143 | | 537 | | 538 | | |
|---|---|---|---|---|---|---|---|---|---|---|---|---|---|---|
| *State:* MICHIGAN. *County:* Marquette. *Location:* McComber mine. *Analysis No.:* 86. *Sampler:* Putnam. *Chemist:* Blair. *Kind of ore:* Hematite. *Remarks:* From stope at west end of main pit near north wall. | | *State:* MICHIGAN. *County:* Marquette. *Location:* McComber mine. *Analysis No.:* 87. *Sampler:* Putnam. *Chemist:* Blair. *Kind of ore:* Hematite. *Remarks:* From bottom of shaft about 130 feet west of engine-house, west side of shaft. | | *State:* MICHIGAN. *County:* Marquette. *Location:* New York mine. *Analysis No.:* 88. *Sampler:* Putnam. *Chemist:* Blair. *Kind of ore:* Specular. *Remarks:* From southeastern part of pit No. 1. | | *State:* MICHIGAN. *County:* Marquette. *Location:* New York mine. *Analysis No.:* 89. *Sampler:* Putnam. *Chemist:* Blair. *Kind of ore:* Specular. *Remarks:* From 200 tons of ore from shaft near the Beardsley pit. | | *State:* MICHIGAN. *County:* Marquette. *Location:* Keystone mine. *Analysis No.:* 143. *Sampler:* Willis. *Chemist:* Blair. *Kind of ore:* Magnetite. *Remarks:* From 2,000 tons at "River furnaces" of Cleveland Rolling Mill Company. | | *State:* MISSOURI. *County:* Iron. *Location:* Shepherd Mountain, Sec. 31, T. 34, R. 4 E. *Analysis No.:* 537. *Sampler:* Chauvenet. *Chemist:* Whitfield. *Kind of ore:* Specular. *Remarks:* From west cut. | | *State:* MISSOURI. *County:* Iron. *Location:* Pilot Knob, Sec. 29, T. 34, R. 4 E. *Analysis No.:* 538. *Sampler:* Chauvenet. *Chemist:* White. *Kind of ore:* Specular. *Remarks:* From lower tunnel. | | |
| Natural ore. | Dried ore. | Natural ore. | Dried ore. | Natural ore. | Dried ore. | Natural ore. | Dried ore. | Natural ore. | Dried ore. | Natural ore. | Dried ore. | Natural ore. | Dried ore. | |
| 4.320 | ..... | 4.575 | ..... | ..... | ..... | ..... | ..... | 4.597 | ..... | ..... | ..... | ..... | ..... | |
| *Per cent.* | *Per cent.* | *Per cent.* | *Per cent.* | *Per cent.* | *Per cent.* | *Per cent.* | *Per cent.* | *Per cent.* | *Per cent.* | *Per cent.* | *Per cent.* | *Per cent.* | *Per cent.* | |
| 0.040 | 0.040 | 0.010 | 0.010 | 0.060 | 0.060 | 0.030 | 0.030 | 0.055 | 0.055 | 0.077 | 0.077 | 0.020 | 0.02 | 1 |
| 0.028 | 0.028 | 0.026 | 0.026 | 0.062 | 0.062 | 0.195 | 0.195 | 0.314 | 0.315 | 0.013 | 0.013 | 0.005 | 0.005 | 2 |
| 59.27 | 59.44 | 55.47 | 55.80 | 67.34 | 67.41 | 63.81 | 63.81 | 59.17 | 59.34 | 65.30 | 65.63 | 59.52 | 59.59 | 3 |
| 5.31 | 5.32 | 4.04 | 4.06 | 1.89 | 1.89 | 3.04 | 3.04 | 7.61 | 7.63 | 3.18 | 3.19 | 12.17 | 12.19 | 1 |
| ..... | ..... | ..... | ..... | 0.81 | 0.81 | 3.08 | 3.08 | 11.36 | 11.39 | 1.76 | 1.77 | 0.78 | 0.78 | 2 |
| 84.63 | 84.87 | 79.23 | 79.71 | 95.22 | 95.32 | 87.69 | 87.69 | 71.88 | 72.08 | 91.36 | 91.69 | 84.16 | 84.26 | 3 |
| 3.57 | 3.58 | 3.04 | 3.06 | 0.81 | 0.81 | 3.04 | 3.04 | 3.45 | 3.46 | 1.37 | 1.37 | 2.21 | 2.21 | 4 |
| 0.44 | 0.44 | 1.36 | 1.37 | ..... | ..... | Trace. | Trace. | 0.04 | 0.04 | Trace. | Trace. | ..... | ..... | 5 |
| 0.11 | 0.11 | 8.23 | 8.28 | ..... | ..... | ..... | ..... | ..... | ..... | ..... | ..... | ..... | ..... | 6 |
| ..... | ..... | ..... | ..... | ..... | ..... | ..... | ..... | ..... | ..... | ..... | ..... | ..... | ..... | 7 |
| 0.15 | 0.15 | 0.11 | 0.11 | 0.20 | 0.20 | 0.67 | 0.67 | 1.34 | 1.34 | 0.43 | 0.43 | 0.04 | 0.04 | 8 |
| 0.12 | 0.12 | 0.14 | 0.14 | ..... | ..... | 0.39 | 0.39 | 0.56 | 0.56 | 0.10 | 0.10 | 0.04 | 0.04 | 9 |
| 0.075 | 0.075 | 0.019 | 0.019 | 0.112 | 0.112 | 0.056 | 0.056 | 0.083 | 0.083 | 0.143 | 0.144 | ..... | ..... | 10 |
| ..... | ..... | ..... | ..... | ..... | ..... | ..... | ..... | ..... | ..... | ..... | ..... | ..... | ..... | 11 |
| ..... | ..... | ..... | ..... | ..... | ..... | ..... | ..... | ..... | ..... | ..... | ..... | ..... | ..... | 12 |
| ..... | ..... | ..... | ..... | ..... | ..... | ..... | ..... | ..... | ..... | ..... | ..... | ..... | ..... | 13 |
| ..... | ..... | 0.11 | 0.11 | ..... | ..... | ..... | ..... | ..... | ..... | ..... | ..... | 0.10 | 0.10 | 14 |
| ..... | ..... | ..... | ..... | ..... | ..... | ..... | ..... | ..... | ..... | ..... | ..... | ..... | ..... | 15 |
| ..... | ..... | ..... | ..... | ..... | ..... | ..... | ..... | ..... | ..... | ..... | ..... | ..... | ..... | 16 |
| ..... | ..... | ..... | ..... | ..... | ..... | ..... | ..... | ..... | ..... | ..... | ..... | ..... | ..... | 17 |
| ..... | ..... | ..... | ..... | ..... | ..... | ..... | ..... | ..... | ..... | ..... | ..... | ..... | ..... | 18 |
| ..... | ..... | ..... | ..... | ..... | ..... | ..... | ..... | ..... | ..... | Trace. | Trace. | ..... | ..... | 19 |
| ..... | ..... | ..... | ..... | ..... | ..... | ..... | ..... | ..... | ..... | ..... | ..... | ..... | ..... | 20 |
| ..... | ..... | ..... | ..... | ..... | ..... | ..... | ..... | ..... | ..... | ..... | ..... | ..... | ..... | 21 |
| 0.02 | 0.02 | 0.15 | 0.15 | 0.11 | 0.11 | 0.33 | 0.33 | 0.92 | 0.92 | 0.11 | 0.11 | 0.15 | 0.15 | 22 |
| ..... | ..... | 0.01 | 0.01 | ..... | ..... | ..... | ..... | 0.86 | 0.86 | 0.05 | 0.05 | 0.07 | 0.07 | 23 |
| 0.13 | 0.13 | 0.11 | 0.11 | 0.09 | 0.09 | 0.12 | 0.12 | 0.10 | 0.10 | 0.09 | 0.09 | 0.04 | 0.04 | 24 |
| ..... | ..... | ..... | ..... | ..... | ..... | ..... | ..... | ..... | ..... | ..... | ..... | 0.05 | 0.05 | 25 |
| 0.065 | 0.065 | 0.060 | 0.060 | 0.142 | 0.142 | 0.448 | 0.448 | 0.720 | 0.722 | 0.029 | 0.029 | 0.011 | 0.011 | 26 |
| ..... | ..... | ..... | ..... | ..... | ..... | ..... | ..... | 0.49 | 0.49 | ..... | ..... | ..... | ..... | 27 |
| ..... | ..... | ..... | ..... | ..... | ..... | ..... | ..... | 0.12 | 0.12 | 0.01 | 0.01 | ..... | ..... | 28 |
| 0.27 | ..... | 0.60 | ..... | 0.10 | ..... | ..... | ..... | 0.28 | ..... | 0.36 | ..... | 0.12 | ..... | 29 |
| 5.19 | 5.20 | 2.90 | 2.92 | 0.40 | 0.40 | 1.17 | 1.17 | 0.23 | 0.23 | 1.00 | 1.00 | 0.37 | 0.37 | 30 |
| 100.080 | 100.080 | 100.109 | 100.109 | 99.974 | 99.974 | 100.034 | 100.034 | 100.043 | 100.025 | 99.992 | 99.983 | 100.311 | 100.311 | |
| 7.92 | 7.94 | 5.97 | 6.01 | 2.88 | 2.88 | 4.99 | 4.99 | 11.61 | 11.64 | 4.27 | 4.28 | 13.78 | 13.80 | |
| 5.31 | 5.32 | 4.04 | 4.06 | 1.89 | 1.89 | 3.04 | 3.04 | 7.61 | 7.63 | 3.18 | 3.19 | 12.17 | 12.19 | 1 |
| 2.55 | 2.56 | 1.68* | 1.69* | 0.86 | 0.86 | 1.55 | 1.55 | 2.48 | 2.49 | 0.87* | 0.87* | 1.11* | 1.11* | 2 |
| ..... | ..... | ..... | ..... | ..... | ..... | ..... | ..... | ..... | ..... | ..... | ..... | ..... | ..... | 3 |
| 0.01 | 0.01 | 0.01 | 0.01 | 0.01 | 0.01 | 0.04 | 0.04 | 0.09 | 0.09 | 0.06 | 0.06 | 0.04 | 0.04 | 4 |
| 0.01 | 0.01 | 0.07 | 0.07 | ..... | ..... | ..... | ..... | 0.11 | 0.11 | ..... | ..... | 0.04 | 0.04 | 5 |
| ..... | ..... | ..... | ..... | ..... | ..... | ..... | ..... | ..... | ..... | ..... | ..... | ..... | ..... | 6 |
| ..... | ..... | ..... | ..... | ..... | ..... | ..... | ..... | ..... | ..... | ..... | ..... | ..... | ..... | 7 |
| ..... | ..... | ..... | ..... | ..... | ..... | ..... | ..... | ..... | ..... | ..... | ..... | ..... | ..... | 8 |
| 0.02 | 0.02 | 0.15 | 0.15 | 0.11 | 0.11 | 0.33 | 0.33 | 0.54 | 0.54 | 0.11 | 0.11 | 0.15 | 0.15 | 9 |
| ..... | ..... | 0.01 | 0.01 | ..... | ..... | ..... | ..... | 0.65 | 0.65 | 0.05 | 0.05 | 0.07 | 0.07 | 10 |
| ..... | ..... | ..... | ..... | ..... | ..... | ..... | ..... | 0.147 | 0.147 | ..... | ..... | ..... | ..... | 11 |
| ..... | ..... | ..... | ..... | ..... | ..... | ..... | ..... | ..... | ..... | ..... | ..... | 0.15 | 0.15 | 12 |
| ..... | ..... | ..... | ..... | ..... | ..... | ..... | ..... | ..... | ..... | ..... | ..... | ..... | ..... | 13 |
| ..... | ..... | ..... | ..... | ..... | ..... | ..... | ..... | ..... | ..... | ..... | ..... | ..... | ..... | 14 |
| 7.90 | 7.92 | 5.96 | 5.99 | 2.87 | 2.87 | 4.96 | 4.96 | 11.627 | 11.657 | 4.27 | 4.28 | 13.78 | 13.75 | |

* With trace of oxide of iron.

TABLE 26.—*Complete analyses of iron ores*—Continued.

| | | 539 | | 550 | | 565 | | 566 | |
|---|---|---|---|---|---|---|---|---|---|
| | | *State:* MISSOURI. *County:* Iron. *Location:* Pilot Knob, Sec. 29, T. 34, R. 4 E. *Analysis No.:* 539. *Sampler:* Chauvenet. *Chemist:* White. *Kind of ore:* Specular. *Remarks:* From upper tunnel on driving face. | | *State:* MISSOURI. *County:* Crawford. *Location:* Cherry Valley mine, Sec. 4, T. 37, R. 3 W. *Analysis No.:* 550. *Sampler:* Chauvenet. *Chemist:* King. *Kind of ore:* Blue specular. *Remarks:* From all parts of bottom of pit No. 1, and 10 feet up side. | | *State:* MISSOURI. *County:* Dent. *Location:* Riverside bank, Sec. 2, T. 33, R. 5 W. *Analysis No.:* 565. *Sampler:* Chauvenet. *Chemist:* White. *Kind of ore:* Blue specular. *Remarks:* From 300 tons of ore from main part of pit. | | *State:* MISSOURI. *County:* Dent. *Location:* Riverside bank, Sec. 2, T. 33, R. 5 W. *Analysis No.:* 566. *Sampler:* Chauvenet. *Chemist:* White. *Kind of ore:* Hematite. *Remarks:* From face of ore. | |
| | | Natural ore. | Dried ore. | Natural ore. | Dried ore. | Natural ore. | Dried ore. | Natural ore. | Dried ore. |
| | Specific gravity | | | | | | | | |
| | | *Per cent.* | *Per cent.* | *Per cent.* | *Per cent.* | *Per cent.* | *Per cent.* | *Per cent.* | *Per cent.* |
| 1 | Sulphur | 0.320 | 0.320 | 0.159 | 0.159 | 0.020 | 0.020 | 0.179 | 0.180 |
| 2 | Phosphorus | 0.018 | 0.018 | 0.022 | 0.022 | 0.029 | 0.029 | 0.063 | 0.063 |
| 3 | Iron, metallic | 52.57 | 52.60 | 65.87 | 65.96 | 63.90 | 63.90 | 64.05 | 64.31 |
| 1 | Silica | 18.71 | 18.72 | 3.06 | 3.06 | 7.15 | 7.15 | 2.56 | 2.57 |
| 2 | Iron, protoxide | 0.87 | 0.87 | 0.82 | 0.82 | 1.19 | 1.19 | 0.46 | 0.46 |
| 3 | Iron, peroxide | 73.13 | 74.17 | 93.01 | 93.14 | 89.93 | 89.93 | 90.77 | 91.13 |
| 4 | Alumina | 2.87 | 2.87 | 1.27 | 1.27 | 0.81 | 0.81 | 1.35 | 1.36 |
| 5 | Manganese, protoxide | | | | | | | | |
| 6 | Manganese, dioxide | | | | | | | | |
| 7 | Chromium, sesquioxide | | | | | | | | |
| 8 | Lime | 0.04 | 0.04 | 0.28 | 0.28 | 0.34 | 0.34 | 0.13 | 0.13 |
| 9 | Magnesia | 0.06 | 0.06 | 0.07 | 0.07 | 0.09 | 0.09 | 0.06 | 0.06 |
| 10 | Iron, disulphide | | | 0.255 | 0.255 | 0.037 | 0.037 | 0.337 | 0.338 |
| 11 | Iron, arsenide | | | | | | | | |
| 12 | Zinc, sulphide | | | | | | | | |
| 13 | Zinc, oxide | | | | | | | | |
| 14 | Barium, oxide | 0.51 | 0.51 | | | | | | |
| 15 | Nickel, sulphide | | | | | | | | |
| 16 | Nickel, oxide | | | | | | | | |
| 17 | Cobalt, sulphide | | | | | | | | |
| 18 | Cobalt, oxide | | | | | | | | |
| 19 | Copper, sulphide | | | | | | | | |
| 20 | Lead | | | | | | | | |
| 21 | Antimony, sulphide | | | | | | | | |
| 22 | Potassa | 0.33 | 0.33 | | | | | | |
| 23 | Soda | 0.14 | 0.14 | | | | | | |
| 24 | Carbonic acid | 0.08 | 0.08 | 0.04 | 0.04 | 0.13 | 0.13 | 0.12 | 0.12 |
| 25 | Sulphuric acid | 0.80 | 0.80 | 0.06 | 0.06 | | | | |
| 26 | Phosphoric acid | 0.041 | 0.041 | 0.051 | 0.051 | 0.066 | 0.066 | 0.145 | 0.144 |
| 27 | Titanic acid | | | | | | | | |
| 28 | Carbon in carbonaceous matter | 0.01 | 0.01 | 0.02 | 0.02 | 0.01 | 0.01 | 0.02 | 0.02 |
| 29 | Hygroscopic water | 0.05 | | 0.14 | | | | 0.40 | |
| 30 | Water of composition | 0.43 | 0.43 | 0.98 | 0.98 | 0.15 | 0.15 | 3.45 | 3.46 |
| | Total | 100.071 | 100.071 | 100.056 | 100.046 | 99.963 | 99.963 | 99.800 | 99.792 |
| | ANALYSIS OF INSOLUBLE SILICEOUS MATTER. | | | | | | | | |
| | Per cent. of insoluble siliceous matter | 23.74 | 23.76 | 3.39 | 3.39 | 7.95 | 7.95 | 3.56 | 3.57 |
| 1 | Silica | 18.71 | 18.72 | 3.06 | 3.06 | 7.15 | 7.15 | 2.56 | 2.57 |
| 2 | Alumina | 2.19* | 2.19* | 0.16 | 0.16 | 0.80 | 0.80 | 1.01 | 1.01 |
| 3 | Iron, protoxide | | | | | | | | |
| 4 | Lime | 0.04 | 0.04 | 0.13 | 0.13 | 0.01 | 0.01 | 0.02 | 0.02 |
| 5 | Magnesia | 0.06 | 0.06 | 0.05 | 0.05 | 0.05 | 0.05 | 0.04 | 0.04 |
| 6 | Manganese, protoxide | | | | | | | | |
| 7 | Nickel, sulphide | | | | | | | | |
| 8 | Zinc, sulphide | | | | | | | | |
| 9 | Potassa | 0.33 | 0.33 | | | | | | |
| 10 | Soda | 0.14 | 0.14 | | | | | | |
| 11 | Phosphoric acid | | | | | | | | |
| 12 | Barium, sulphate | 2.31 | 2.31 | | | | | | |
| 13 | Titanic acid | | | | | | | | |
| 14 | Chromium sesquioxide | | | | | | | | |
| | Total | 23.78 | 23.79 | 3.40 | 3.40 | 8.01 | 8.01 | 3.63 | 3.64 |

* With trace of oxide of iron.

TABLE 26.—*Complete analyses of iron ores*—Continued.

| 302 | | 308 | | 311 | | 318 | | 325 | | 714 | | 738 | | |
|---|---|---|---|---|---|---|---|---|---|---|---|---|---|---|
| *State:* NEW JERSEY. *County:* Sussex. *Location:* Andover mine, Andover. *Analysis No.:* 302. *Sampler:* Putnam. *Chemist:* Blair. *Kind of ore:* Magnetite. *Remarks:* From 80 tons of sorted ore on dock. | | *State:* NEW JERSEY. *County:* Sussex. *Location:* Pike's Peak or Furnace vein, Hardyston. *Analysis No.:* 308. *Sampler:* Putnam. *Chemist:* Blair. *Kind of ore:* Magnetite. *Remarks:* From 150 tons at Franklin furnace. | | *State:* NEW JERSEY. *County:* Sussex. *Location:* Pardee (Ogden mines), Sparta. *Analysis No.:* 311. *Sampler:* Putnam. *Chemist:* Blair. *Kind of ore:* Magnetite. *Remarks:* From 2,500 tons at mine. | | *State:* NEW JERSEY. *County:* Morris. *Location:* Hurd or Hurdtown, Jefferson. *Analysis No.:* 318. *Sampler:* Putnam. *Chemist:* Blair. *Kind of ore:* Magnetite. *Remarks:* From about 110 tons on cars at mine. | | *State:* NEW JERSEY. *County:* Warren. *Location:* Shields, Beattyestown hematite, Mansfield. *Analysis No.:* 325. *Sampler:* Putnam. *Chemist:* Blair. *Kind of ore:* Limonite. *Remarks:* From 25 tons at Stanhope furnace. | | *State:* NEW YORK. *County:* Richmond. *Location:* New Dorp mine, Staten Island. *Analysis No.:* 714. *Sampler:* Putnam. *Chemist:* Whitfield. *Kind of ore:* Limonite. *Remarks:* From 3,000 tons of washed ore at mine. | | *State:* NEW YORK. *County:* Putnam. *Location:* Tilly Foster mine, South East. *Analysis No.:* 738. *Sampler:* Putnam. *Chemist:* Whitfield. *Kind of ore:* Magnetite. *Remarks:* From mine, south side room No. 2, N. 300-foot level, from near foot-wall, to point one-third the way across the vein. | | |
| Natural ore. | Dried ore. | Natural ore. | Dried ore. | Natural ore. | Dried ore. | Natural ore. | Dried ore. | Natural ore. | Dried ore. | Natural ore. | Dried ore. | Natural ore. | Dried ore. | |
| 4.086 | ..... | 3.576 | ..... | ..... | ..... | ..... | ..... | 3.494 | ..... | 3.988 | ..... | ..... | ..... | |
| *Per cent.* | *Per cent.* | *Per cent.* | *Per cent.* | *Per cent.* | *Per cent.* | *Per cent.* | *Per cent.* | *Per cent.* | *Per cent.* | *Per cent.* | *Per cent.* | *Per cent.* | *Per cent.* | |
| 2.527 | 2.530 | 0.430 | 0.439 | 0.113 | 0.113 | 0.096 | 0.096 | 0.041 | 0.041 | 0.391 | 0.400 | 0.548 | 0.550 | 1 |
| 0.022 | 0.022 | 0.033 | 0.033 | 1.067 | 1.067 | 0.169 | 0.169 | 0.257 | 0.258 | 0.059 | 0.060 | 0.015 | 0.015 | 2 |
| 36.91 | 36.95 | 33.15 | 33.17 | 59.23 | 59.23 | 66.02 | 66.05 | 42.73 | 42.96 | 39.72 | 40.63 | 48.91 | 49.05 | 3 |
| 21.86 | 21.89 | 1.67 | 1.67 | 7.63 | 7.63 | 4.06 | 4.06 | 19.24 | 19.34 | 14.19 | 14.51 | 12.18 | 12.22 | 1 |
| 15.42 | 15.44 | 14.43 | 14.44 | 25.34 | 25.34 | 29.78 | 29.80 | ..... | ..... | 0.55 | 0.56 | 21.90 | 22.05 | 2 |
| 32.56 | 32.60 | 30.69 | 30.71 | 56.37 | 56.37 | 61.13 | 61.16 | 60.99 | 61.32 | 55.95 | 57.23 | 44.75 | 44.88 | 3 |
| 3.97 | 3.97 | 0.28 | 0.28 | 3.08 | 3.08 | 1.73 | 1.73 | 4.72 | 4.75 | 8.59 | 8.79 | 0.79 | 0.79 | 4 |
| 0.32 | 0.32 | 2.90 | 2.90 | 0.34 | 0.34 | Trace. | Trace. | 1.81 | 1.82 | 0.52 | 0.53 | 0.10 | 0.10 | 5 |
| ..... | ..... | ..... | ..... | ..... | ..... | ..... | ..... | ..... | ..... | ..... | ..... | ..... | ..... | 6 |
| ..... | ..... | ..... | ..... | ..... | ..... | ..... | ..... | ..... | ..... | 1.91 | 1.95 | ..... | ..... | 7 |
| 18.57 | 18.59 | 17.63 | 17.64 | 4.09 | 4.09 | 1.29 | 1.29 | 0.34 | 0.34 | 0.18 | 0.18 | 3.10 | 3.11 | 8 |
| 0.16 | 0.16 | 7.53 | 7.53 | 0.27 | 0.27 | 0.43 | 0.43 | 0.70 | 0.70 | 3.66 | 3.68 | 11.72 | 11.75 | 9 |
| 4.530 | 4.540 | 0.780 | 0.780 | 0.212 | 0.212 | 0.144 | 0.144 | 0.077 | 0.077 | 0.293 | 0.300 | 1.031 | 1.031 | 10 |
| ..... | ..... | 0.47 | 0.47 | ..... | ..... | ..... | ..... | ..... | ..... | ..... | ..... | ..... | ..... | 11 |
| 0.24 | 0.24 | ..... | ..... | ..... | ..... | ..... | ..... | ..... | ..... | ..... | ..... | ..... | ..... | 12 |
| ..... | ..... | ..... | ..... | ..... | ..... | ..... | ..... | ..... | ..... | ..... | ..... | ..... | ..... | 13 |
| ..... | ..... | ..... | ..... | ..... | ..... | ..... | ..... | ..... | ..... | ..... | ..... | ..... | ..... | 14 |
| 0.01 | 0.01 | ..... | ..... | ..... | ..... | ..... | ..... | ..... | ..... | 0.55 | 0.56 | ..... | ..... | 15 |
| ..... | ..... | ..... | ..... | ..... | ..... | ..... | ..... | 0.06 | 0.06 | ..... | ..... | ..... | ..... | 16 |
| 0.01 | 0.01 | ..... | ..... | ..... | ..... | ..... | ..... | ..... | ..... | 0.17 | 0.17 | ..... | ..... | 17 |
| ..... | ..... | ..... | ..... | ..... | ..... | ..... | ..... | 0.04 | 0.04 | ..... | ..... | ..... | ..... | 18 |
| 0.12 | 0.12 | 0.03 | 0.03 | ..... | ..... | ..... | ..... | ..... | ..... | ..... | ..... | ..... | ..... | 19 |
| Trace. | Trace. | ..... | ..... | ..... | ..... | ..... | ..... | ..... | ..... | ..... | ..... | ..... | ..... | 20 |
| ..... | ..... | 0.05 | 0.05 | ..... | ..... | ..... | ..... | ..... | ..... | ..... | ..... | ..... | ..... | 21 |
| 0.05 | 0.05 | ..... | ..... | ..... | ..... | 0.03 | 0.03 | 1.46 | 1.47 | 0.19 | 0.19 | ..... | ..... | 22 |
| ..... | ..... | ..... | ..... | ..... | ..... | 0.09 | 0.09 | 0.10 | 0.10 | 0.40 | 0.41 | ..... | ..... | 23 |
| 1.58 | 1.58 | 22.25 | 22.27 | 0.06 | 0.06 | 0.26 | 0.26 | 0.06 | 0.06 | 0.22 | 0.22 | 0.40 | 0.40 | 24 |
| ..... | ..... | ..... | ..... | ..... | ..... | ..... | ..... | ..... | ..... | ..... | ..... | ..... | ..... | 25 |
| 0.051 | 0.051 | 0.077 | 0.077 | 2.444 | 2.444 | 0.389 | 0.389 | 0.588 | 0.591 | 0.135 | 0.138 | 0.034 | 0.034 | 26 |
| 0.13 | 0.13 | ..... | ..... | 0.09 | 0.09 | 0.14 | 0.14 | ..... | ..... | ..... | ..... | ..... | ..... | 27 |
| ..... | ..... | 0.08* | 0.08* | ..... | ..... | 0.03 | 0.03 | 0.11 | 0.11 | 0.13 | 0.13 | ..... | ..... | 28 |
| 0.12 | ..... | 0.06 | ..... | ..... | ..... | 0.05 | ..... | 0.52 | ..... | 2.21 | ..... | 0.20 | ..... | 29 |
| 0.33 | 0.33 | 0.18 | 0.18 | 0.38 | 0.38 | 0.24 | 0.24 | 8.88 | 8.92 | 10.20 | 10.41 | 3.70 | 3.80 | 30 |
| 100.031 | 100.031 | 100.007 | 100.007 | 100.306 | 100.306 | 99.793 | 99.793 | 99.695 | 99.698 | 99.988 | 99.958 | 100.175 | 100.165 | |
| 23.67 | 23.70 | 2.41 | 2.41 | 9.09 | 9.09 | 5.36 | 5.36 | 24.91 | 25.04 | 21.26 | 21.74 | 13.15 | 13.19 | |
| 21.86 | 21.89 | 1.67 | 1.67 | 7.63 | 7.63 | 4.06 | 4.06 | 19.24 | 19.34 | 14.19 | 14.51 | 12.18 | 12.22 | 1 |
| 1.08 | 1.08 | 0.45 | 0.45 | 1.99† | 1.99† | 0.17 | 0.17 | 4.06† | 4.08† | 3.47 | 3.55 | 0.32† | 0.32† | 2 |
| ..... | ..... | ..... | ..... | ..... | ..... | 0.58 | 0.58 | ..... | ..... | ..... | ..... | ..... | ..... | 3 |
| 0.51 | 0.51 | 0.19 | 0.19 | 0.04 | 0.04 | 0.27 | 0.27 | 0.07 | 0.07 | ..... | ..... | 0.29 | 0.29 | 4 |
| 0.16 | 0.16 | 0.08 | 0.08 | 0.02 | 0.02 | 0.17 | 0.17 | 0.48 | 0.48 | 2.92 | 2.99 | 0.27 | 0.27 | 5 |
| ..... | ..... | ..... | ..... | ..... | ..... | ..... | ..... | ..... | ..... | ..... | ..... | ..... | ..... | 6 |
| ..... | ..... | ..... | ..... | ..... | ..... | ..... | ..... | ..... | ..... | ..... | ..... | ..... | ..... | 7 |
| ..... | ..... | ..... | ..... | ..... | ..... | ..... | ..... | ..... | ..... | ..... | ..... | ..... | ..... | 8 |
| 0.05 | 0.05 | ..... | ..... | ..... | ..... | 0.03 | 0.03 | 1.02 | 1.02 | 0.03 | 0.03 | ..... | ..... | 9 |
| ..... | ..... | ..... | ..... | ..... | ..... | 0.09 | 0.09 | 0.03 | 0.03 | 0.07 | 0.07 | ..... | ..... | 10 |
| ..... | ..... | ..... | ..... | ..... | ..... | ..... | ..... | ..... | ..... | 0.01 | 0.01 | ..... | ..... | 11 |
| ..... | ..... | ..... | ..... | ..... | ..... | ..... | ..... | ..... | ..... | ..... | ..... | ..... | ..... | 12 |
| ..... | ..... | ..... | ..... | ..... | ..... | ..... | ..... | ..... | ..... | ..... | ..... | ..... | ..... | 13 |
| ..... | ..... | ..... | ..... | ..... | ..... | ..... | ..... | ..... | ..... | 0.68 | 0.69 | ..... | ..... | 14 |
| 23.69 | 23.66 | 2.39 | 2.39 | 9.08 | 9.08 | 5.37 | 5.37 | 24.90 | 25.02 | 21.37 | 21.85 | 13.06 | 13.10 | |

* Graphite.

† With trace of oxide of iron.

TABLE 26.—*Complete analyses of iron ores*—Continued.

| | | 743 | | 755 | | 762 | | 158 | |
|---|---|---|---|---|---|---|---|---|---|
| | | *State:* NEW YORK. *County:* Putnam. *Location:* Tilly Foster mine, South East. *Analysis No.:* 743. *Sampler:* Putnam. *Chemist:* Whitfield. *Kind of ore:* Magnetite. *Remarks:* From cars at mine; ore from 110-foot level, Duncan shaft. | | *State:* NEW YORK. *County:* Duchess. *Location:* Fishkill, East Fishkill. *Analysis No.:* 755. *Sampler:* Putnam. *Chemist:* Whitfield. *Kind of ore:* Limonite. *Remarks:* From 70 tons washed and rock ore on cars, principally washed ore. | | *State:* NEW YORK. *County:* Duchess. *Location:* Gridley & Sons, Amenia. *Analysis No.:* 762. *Sampler:* Putnam. *Chemist:* Whitfield. *Kind of ore:* Limonite. *Remarks:* From 200 tons of washed ore at mine. | | *State:* NORTH CAROLINA. *County:* Chatham. *Location:* Opening No. 11, 90-foot shaft, Ore Hill. *Analysis No.:* 158. *Sampler:* Willis. *Chemist:* Pitman. *Kind of ore:* Limonite. *Remarks:* From 1½ tons of ore near shaft, 90 feet deep. | |
| | | Natural ore. | Dried ore. | Natural ore. | Dried ore. | Natural ore. | Dried ore. | Natural ore. | Dried ore. |
| | Specific gravity | | | | | | | | |
| | | *Per cent.* | *Per cent.* | *Per cent.* | *Per cent.* | *Per cent.* | *Per cent.* | *Per cent.* | *Per cent.* |
| 1 | Sulphur | 0.538 | 0.539 | 0.143 | 0.144 | 0.152 | 0.153 | 0.263 | 0.270 |
| 2 | Phosphorus | 0.007 | 0.007 | 0.073 | 0.074 | 0.413 | 0.415 | 0.390 | 0.400 |
| 3 | Iron, metallic | 49.66 | 49.74 | 40.92 | 41.29 | 48.90 | 49.25 | 57.23 | 58.76 |
| 1 | Silica | 10.81 | 10.83 | 24.68 | 24.90 | 11.94 | 12.00 | 1.28 | 1.30 |
| 2 | Iron, protoxide | 23.36 | 23.40 | 0.25 | 0.25 | 0.30 | 0.30 | 0.23 | 0.24 |
| 3 | Iron, peroxide | 44.30 | 44.37 | 57.99 | 58.52 | 67.77 | 68.12 | 81.19 | 83.36 |
| 4 | Alumina | 1.11 | 1.11 | 3.82 | 3.85 | 4.10 | 4.12 | 2.38 | 2.44 |
| 5 | Manganese, protoxide | 0.04 | 0.04 | 0.94 | 0.95 | 0.65 | 0.65 | | |
| 6 | Manganese, dioxide | | | | | | | | |
| 7 | Chromium, sesquioxide | | | | | | | | |
| 8 | Lime | 1.19 | 1.19 | 1.13 | 1.14 | 1.60 | 1.61 | 0.14 | 0.14 |
| 9 | Magnesia | 16.33 | 16.36 | 0.41 | 0.41 | 0.48 | 0.48 | 0.01 | 0.01 |
| 10 | Iron, disulphide | 1.010 | 1.010 | 0.279 | 0.270 | 0.286 | 0.287 | 0.473 | 0.485 |
| 11 | Iron, arsenide | | | | | | | | |
| 12 | Zinc, sulphide | | | | | | | | |
| 13 | Zinc, oxide | | | | | | | | |
| 14 | Barium, oxide | | | | | | | | |
| 15 | Nickel, sulphide | | | | | | | 0.02 | 0.02 |
| 16 | Nickel, oxide | | | | | | | | |
| 17 | Cobalt, sulphide | | | | | | | | |
| 18 | Cobalt, oxide | | | | | | | | |
| 19 | Copper, sulphide | | | | | | | 0.02 | 0.02 |
| 20 | Lead | | | | | | | | |
| 21 | Antimony, sulphide | | | | | | | | |
| 22 | Potassa | 0.12 | 0.12 | | | 1.12 | 1.13 | 0.14 | 0.14 |
| 23 | Soda | 0.22 | 0.22 | | | 0.34 | 0.34 | 0.01 | 0.01 |
| 24 | Carbonic acid | 0.28 | 0.28 | 0.25 | 0.25 | 0.34 | 0.34 | 0.18 | 0.18 |
| 25 | Sulphuric acid | 0.05 | 0.05 | | | 0.06 | 0.06 | | |
| 26 | Phosphoric acid | 0.015 | 0.015 | 0.167 | 0.169 | 0.950 | 0.950 | 0.893 | 0.917 |
| 27 | Titanic acid | | | | | | | 1.04 | 1.07 |
| 28 | Carbon in carbonaceous matter | 0.01 | 0.01 | 0.06 | 0.06 | 0.08 | 0.08 | 0.17 | 0.17 |
| 29 | Hygroscopic water | 0.16 | | 0.87 | | 0.51 | | 2.57 | |
| 30 | Water of composition | 0.89 | 0.89 | 9.48 | 9.56 | 9.76 | 9.80 | 9.32 | 9.54 |
| | Total | 99.895 | 99.895 | 100.317 | 100.329 | 100.286 | 100.267 | 100.066 | 100.042 |
| | ANALYSIS OF INSOLUBLE SILICEOUS MATTER. | | | | | | | | |
| | Per cent. of insoluble siliceous matter | 12.07 | 12.09 | 27.21 | 27.46 | 15.44 | 15.52 | 1.82 | 1.860 |
| 1 | Silica | 10.81 | 10.83 | 24.68 | 24.90 | 11.94 | 12.00 | 1.28 | 1.30 |
| 2 | Alumina | 0.68* | 0.68* | 1.94* | 1.96* | 2.15* | 2.16* | 0.48 | 0.49 |
| 3 | Iron, protoxide | | | | | | | | |
| 4 | Lime | 0.30 | 0.30 | 0.27 | 0.27 | 0.32 | 0.32 | 0.06 | 0.06 |
| 5 | Magnesia | 0.45 | 0.45 | 0.23 | 0.23 | 0.20 | 0.20 | 0.01 | 0.01 |
| 6 | Manganese, protoxide | | | | | | | | |
| 7 | Nickel, sulphide | | | | | | | | |
| 8 | Zinc, sulphide | | | | | | | | |
| 9 | Potassa | | | | | 0.92 | 0.92 | | |
| 10 | Soda | | | | | 0.10 | 0.10 | | |
| 11 | Phosphoric acid | | | | | | | | |
| 12 | Barium, sulphate | | | | | | | | |
| 13 | Titanic acid | | | | | | | | |
| 14 | Chromium, sesquioxide | | | | | | | | |
| | Total | 12.24 | 12.26 | 27.12 | 27.36 | 15.63 | 15.70 | 1.83 | 1.86 |

* With trace of oxide of iron.

TABLE 26.—*Complete analyses of iron ores*—Continued.

| 165 | | 170 | | 184 | | 188 | | 189 | | 402 | | |
|---|---|---|---|---|---|---|---|---|---|---|---|---|
| *State:* NORTH CAROLINA. *County:* Rockingham. *Location:* Dannemora, near Brown's summit. *Analysis No.:* 165. *Sampler:* Willis. *Chemist:* Pitman. *Kind of ore:* Magnetite. *Remarks:* From 5 tons of ore from drift 70 feet below the surface. | | *State:* NORTH CAROLINA. *County:* Stokes. *Location:* Roger's bank, near Danbury. *Analysis No.:* 170. *Sampler:* Willis. *Chemist:* Pitman. *Kind of ore:* Magnetite. *Remarks:* From 2 tons of ore near old pit. | | *State:* NORTH CAROLINA. *County:* Lincoln. *Location:* Big bank, near Lincolnton. *Analysis No.:* 184. *Sampler:* Willis. *Chemist:* Pitman. *Kind of ore:* Magnetite and hematite. *Remarks:* From ore mined in shaft near water-level. | | *State:* NORTH CAROLINA. *County:* Gaston. *Location:* Mine mountain, near Kings mountain. *Analysis No.:* 188. *Sampler:* Willis. *Chemist:* Pitman. *Kind of ore:* Limonite. *Remarks:* From 15 tons of ore near cut. | | *State:* NORTH CAROLINA. *County:* Gaston. *Location:* Mine mountain, near Kings mountain. *Analysis No.:* 189. *Sampler:* Willis. *Chemist:* Pitman. *Kind of ore:* Limonite. *Remarks:* From 5 tons of ore near opening. | | *State:* NORTH CAROLINA. *County:* Orange. *Location:* Chapel Hill, Chapel Hill. *Analysis No.:* 402. *Sampler:* Willis. *Chemist:* Pitman. *Kind of ore:* Specular. *Remarks:* From 10-foot vein in main shaft. | | |
| Natural ore. | Dried ore. | Natural ore. | Dried ore. | Natural ore. | Dried ore. | Natural ore. | Dried ore. | Natural ore. | Dried ore. | Natural ore. | Dried ore. | |
| 4.453 | ..... | 4.519 | ..... | 4.495 | ..... | 4.180 | ..... | 4.391 | ..... | 3.551 | ..... | |
| *Per cent.* | *Per cent.* | *Per cent.* | *Per cent.* | *Per cent.* | *Per cent.* | *Per cent.* | *Per cent.* | *Per cent.* | *Per cent.* | *Per cent.* | *Per cent.* | |
| 0.080 | 0.080 | 0.179 | 0.179 | 0.086 | 0.086 | 0.000 | 0.000 | 0.112 | 0.113 | 0.153 | 0.153 | 1 |
| 0.023 | 0.023 | 0.001 | 0.001 | 0.013 | 0.013 | 0.000 | 0.000 | 0.005 | 0.005 | 0.057 | 0.057 | 2 |
| 48.31 | 48.41 | 58.26 | 58.30 | 58.38 | 58.56 | 61.00 | 61.20 | 58.37 | 58.73 | 37.91 | 37.94 | 3 |
| 4.70 | 4.71 | 12.29 | 12.30 | 0.14 | 0.17 | 1.03 | 1.04 | 5.28 | 5.31 | 43.00 | 43.04 | 1 |
| 23.51 | 23.56 | 16.88 | 16.89 | 8.68 | 8.71 | 0.24 | 0.24 | 0.29 | 0.29 | 1.45 | 1.45 | 2 |
| 43.05 | 43.14 | 64.24 | 64.29 | 73.67 | 73.89 | 86.75 | 87.04 | 82.92 | 83.43 | 52.34 | 52.39 | 3 |
| 8.66 | 8.68 | 0.58 | 0.58 | 2.45 | 2.46 | 0.25 | 0.25 | 1.33 | 1.34 | 2.07 | 2.07 | 4 |
| 0.15 | 0.15 | ..... | ..... | 0.06 | 0.06 | 1.00 | 1.00 | 4.11 | 4.13 | Trace. | Trace. | 5 |
| ..... | ..... | ..... | ..... | ..... | ..... | ..... | ..... | ..... | ..... | ..... | ..... | 6 |
| 0.34 | 0.34 | ..... | ..... | ..... | ..... | ..... | ..... | ..... | ..... | ..... | ..... | 7 |
| 1.42 | 1.42 | 1.99 | 1.99 | 0.27 | 0.27 | 0.24 | 0.24 | 0.52 | 0.52 | 0.10 | 0.10 | 8 |
| 2.96 | 2.97 | 3.31 | 3.31 | 4.32 | 4.33 | 0.13 | 0.13 | 0.16 | 0.16 | 0.02 | 0.02 | 9 |
| 0.133 | 0.133 | 0.336 | 0.336 | 0.140 | 0.140 | 0.169 | 0.169 | 0.211 | 0.212 | 0.287 | 0.287 | 10 |
| ..... | ..... | ..... | ..... | ..... | ..... | ..... | ..... | ..... | ..... | ..... | ..... | 11 |
| ..... | ..... | ..... | ..... | ..... | ..... | ..... | ..... | ..... | ..... | ..... | ..... | 12 |
| ..... | ..... | ..... | ..... | ..... | ..... | ..... | ..... | ..... | ..... | ..... | ..... | 13 |
| ..... | ..... | ..... | ..... | ..... | ..... | ..... | ..... | ..... | ..... | ..... | ..... | 14 |
| 0.01 | 0.01 | ..... | ..... | ..... | ..... | Trace. | Trace. | Trace. | Trace. | ..... | ..... | 15 |
| ..... | ..... | ..... | ..... | ..... | ..... | ..... | ..... | ..... | ..... | ..... | ..... | 16 |
| 0.03 | 0.03 | ..... | ..... | ..... | ..... | Trace. | Trace. | Trace. | Trace. | ..... | ..... | 17 |
| ..... | ..... | ..... | ..... | ..... | ..... | ..... | ..... | ..... | ..... | ..... | ..... | 18 |
| 0.01 | 0.01 | ..... | ..... | 0.05 | 0.05 | Trace. | Trace. | Trace. | Trace. | Trace. | Trace. | 19 |
| ..... | ..... | ..... | ..... | ..... | ..... | ..... | ..... | ..... | ..... | ..... | ..... | 20 |
| ..... | ..... | ..... | ..... | ..... | ..... | ..... | ..... | ..... | ..... | ..... | ..... | 21 |
| 0.03 | 0.03 | ..... | ..... | ..... | ..... | ..... | ..... | ..... | ..... | ..... | ..... | 22 |
| 0.05 | 0.05 | ..... | ..... | ..... | ..... | ..... | ..... | ..... | ..... | ..... | ..... | 23 |
| 0.07 | 0.07 | 0.08 | 0.08 | 0.06 | 0.06 | 0.15 | 0.15 | 0.14 | 0.14 | 0.05 | 0.05 | 24 |
| ..... | ..... | ..... | ..... | ..... | ..... | ..... | ..... | ..... | ..... | ..... | ..... | 25 |
| 0.052 | 0.052 | 0.002 | 0.002 | 0.030 | 0.030 | 0.023 | 0.023 | 0.017 | 0.017 | 0.131 | 0.131 | 26 |
| 13.71 | 13.74 | ..... | ..... | ..... | ..... | ..... | ..... | ..... | ..... | Trace. | Trace. | 27 |
| 0.06 | 0.06 | 0.01 | 0.01 | 0.01 | 0.01 | 0.06 | 0.06 | 0.03 | 0.03 | 0.01 | 0.01 | 28 |
| 0.21 | ..... | 0.07 | ..... | 0.30 | ..... | 0.33 | ..... | 0.92 | ..... | 0.09 | ..... | 29 |
| 0.96 | 0.96 | 0.38 | 0.38 | 1.07 | 1.07 | 0.30 | 0.30 | 4.24 | 4.27 | 0.55 | 0.55 | 30 |
| 100.115 | 100.115 | 100.168 | 100.168 | 100.250 | 100.250 | 100.272 | 100.273 | 99.808 | 99.849 | 100.098 | 100.098 | |
| 28.00 | 28.06 | 21.15 | 21.16 | 14.32 | 14.36 | 1.03 | 1.04 | 5.59 | 5.62 | 44.49 | 44.53 | |
| 4.70 | 4.71 | 12.29 | 12.30 | 0.14 | 0.17 | 1.03 | 1.04 | 5.28 | 5.31 | 43.00 | 43.04 | 1 |
| 9.75 | 9.77 | 4.34 | 4.34 | 1.83 | 1.84 | Trace. | Trace. | 0.26 | 0.26 | 1.40 | 1.40 | 2 |
| ..... | ..... | ..... | ..... | ..... | ..... | ..... | ..... | ..... | ..... | ..... | ..... | 3 |
| 0.56 | 0.56 | 1.09 | 1.09 | 0.20 | 0.20 | Trace. | Trace. | 0.14 | 0.14 | 0.07 | 0.07 | 4 |
| 0.72 | 0.72 | 2.92 | 2.92 | 3.17 | 3.18 | ..... | ..... | ..... | ..... | 0.02 | 0.02 | 5 |
| ..... | ..... | ..... | ..... | ..... | ..... | ..... | ..... | ..... | ..... | ..... | ..... | 6 |
| ..... | ..... | ..... | ..... | ..... | ..... | ..... | ..... | ..... | ..... | ..... | ..... | 7 |
| ..... | ..... | ..... | ..... | ..... | ..... | ..... | ..... | ..... | ..... | ..... | ..... | 8 |
| 0.03 | 0.03 | ..... | ..... | ..... | ..... | ..... | ..... | ..... | ..... | ..... | ..... | 9 |
| 0.05 | 0.05 | ..... | ..... | ..... | ..... | ..... | ..... | ..... | ..... | ..... | ..... | 10 |
| 0.045 | 0.045 | ..... | ..... | ..... | ..... | ..... | ..... | ..... | ..... | ..... | ..... | 11 |
| ..... | ..... | ..... | ..... | ..... | ..... | ..... | ..... | ..... | ..... | ..... | ..... | 12 |
| 11.82 | 11.84 | ..... | ..... | ..... | ..... | ..... | ..... | ..... | ..... | ..... | ..... | 13 |
| ..... | ..... | ..... | ..... | ..... | ..... | ..... | ..... | ..... | ..... | ..... | ..... | 14 |
| 27.675 | 27.725 | 21.24 | 21.25 | 14.34 | 14.39 | 1.03 | 1.04 | 5.68 | 5.71 | 44.49 | 44.53 | |

TABLE 26.—*Complete analyses of iron ores*—Continued.

| | | 407 | | 409 | | 295 | | 299 | |
|---|---|---|---|---|---|---|---|---|---|
| | | *State:* NORTH CAROLINA. *County:* Mitchell. *Location:* Cranberry, Big Yellow mountain. *Analysis No.:* 407. *Sampler:* Willis. *Chemist:* Pitman. *Kind of ore:* Magnetite. *Remarks:* Pure magnetite from near southern end of workings. | | *State:* NORTH CAROLINA. *County:* Mitchell. *Location:* Cranberry, Big Yellow mountain. *Analysis No.:* 409. *Sampler:* Willis. *Chemist:* Pitman. *Kind of ore:* Magnetite. *Remarks:* Magnetite, with epidote from opening 100 yards N. E. of location of No. 407. | | *State:* TENNESSEE. *County:* Rhea. *Location:* Hill and Tarwater, Rhea Springs. *Analysis No.:* 295. *Sampler:* Chauvenet. *Chemist:* White. *Kind of ore:* Fossil. *Remarks:* From whole vein. | | *State:* TENNESSEE. *County:* Lawrence. *Location:* Napier's, near Napier furnace. *Analysis No.:* 299. *Sampler:* Chauvenet. *Chemist:* White. *Kind of ore:* Limonite. *Remarks:* From stock pile at Napier furnace. | |
| | | Natural ore. | Dried ore. | Natural ore. | Dried ore. | Natural ore. | Dried ore. | Natural ore. | Dried ore. |
| | Specific gravity | 4.753 | ..... | 3.637 | ..... | 4.007 | ..... | 3.714 | ..... |
| | | *Per cent.* | *Per cent.* | *Per cent.* | *Per cent.* | *Per cent.* | *Per cent.* | *Per cent.* | *Per cent.* |
| 1 | Sulphur | 0.115 | 0.115 | 0.128 | 0.128 | 0.109 | 0.110 | 0.070 | 0.070 |
| 2 | Phosphorus | 0.004 | 0.004 | 0.010 | 0.010 | 0.506 | 0.510 | 0.519 | 0.522 |
| 3 | Iron, metallic | 64.64 | 64.87 | 32.37 | 32.49 | 51.71 | 52.11 | 52.01 | 52.88 |
| 1 | Silica | 5.27 | 5.29 | 29.99 | 30.10 | 10.88 | 10.97 | 6.19 | 6.22 |
| 2 | Iron, protoxide | 26.68 | 26.77 | 18.93 | 19.00 | 0.69 | 0.69 | 0.35 | 0.35 |
| 3 | Iron, peroxide | 62.57 | 62.79 | 25.05 | 25.14 | 72.96 | 73.53 | 75.17 | 75.56 |
| 4 | Alumina | 1.18 | 1.18 | 10.07 | 10.11 | 6.89 | 6.94 | 3.57 | 3.59 |
| 5 | Manganese, protoxide | 0.22 | 0.22 | 0.76 | 0.76 | 0.42 | 0.42 | 0.92 | 0.92 |
| 6 | Manganese, dioxide | ..... | ..... | ..... | ..... | ..... | ..... | ..... | ..... |
| 7 | Chromium, sesquioxide | ..... | ..... | ..... | ..... | ..... | ..... | ..... | ..... |
| 8 | Lime | 1.46 | 1.47 | 11.33 | 11.37 | 2.26 | 2.28 | 0.26 | 0.26 |
| 9 | Magnesia | 0.55 | 0.55 | 1.78 | 1.78 | 0.73 | 0.73 | 0.38 | 0.38 |
| 10 | Iron, disulphide | 0.200 | 0.200 | 0.180 | 0.180 | 0.205 | 0.206 | 0.130 | 0.131 |
| 11 | Iron, arsenide | ..... | ..... | ..... | ..... | ..... | ..... | ..... | ..... |
| 12 | Zinc, sulphide | ..... | ..... | ..... | ..... | ..... | ..... | ..... | ..... |
| 13 | Zinc, oxide | ..... | ..... | ..... | ..... | ..... | ..... | ..... | ..... |
| 14 | Barium, oxide | ..... | ..... | ..... | ..... | ..... | ..... | ..... | ..... |
| 15 | Nickel, sulphide | 0.04 | 0.04 | 0.09 | 0.09 | ..... | ..... | ..... | ..... |
| 16 | Nickel, oxide | ..... | ..... | ..... | ..... | ..... | ..... | ..... | ..... |
| 17 | Cobalt, sulphide | ..... | ..... | ..... | ..... | ..... | ..... | ..... | ..... |
| 18 | Cobalt, oxide | ..... | ..... | ..... | ..... | ..... | ..... | ..... | ..... |
| 19 | Copper, sulphide | ..... | ..... | ..... | ..... | ..... | ..... | ..... | ..... |
| 20 | Lead | ..... | ..... | ..... | ..... | ..... | ..... | ..... | ..... |
| 21 | Antimony, sulphide | ..... | ..... | ..... | ..... | ..... | ..... | ..... | ..... |
| 22 | Potassa | ..... | ..... | ..... | ..... | ..... | ..... | ..... | ..... |
| 23 | Soda | ..... | ..... | ..... | ..... | ..... | ..... | ..... | ..... |
| 24 | Carbonic acid | 0.08 | 0.08 | 0.07 | 0.07 | 0.07 | 0.07 | 0.25 | 0.25 |
| 25 | Sulphuric acid | ..... | ..... | ..... | ..... | ..... | ..... | ..... | ..... |
| 26 | Phosphoric acid | 0.007 | 0.007 | 0.024 | 0.024 | 1.158 | 1.168 | 1.180 | 1.195 |
| 27 | Titanic acid | 0.95 | 0.95 | ..... | ..... | ..... | ..... | ..... | ..... |
| 28 | Carbon in carbonaceous matter | ..... | ..... | ..... | ..... | 0.01 | 0.01 | 0.09 | 0.09 |
| 29 | Hygroscopic water | 0.35 | ..... | 0.37 | ..... | 0.77 | ..... | 0.43 | ..... |
| 30 | Water of composition | 0.49 | 0.49 | 1.49 | 1.50 | 2.94 | 2.96 | 11.15 | 11.12 |
| | Total | 100.047 | 100.037 | 100.134 | 100.124 | 99.983 | 99.974 | 100.079 | 100.066 |
| | ANALYSIS OF INSOLUBLE SILICEOUS MATTER. | | | | | | | | |
| | Per cent. of insoluble siliceous matter | 7.20 | 7.23 | 43.69 | 43.85 | 13.18 | 13.28 | 7.59 | 7.63 |
| 1 | Silica | 5.27 | 5.29 | 29.99 | 30.10 | 10.88 | 10.97 | 6.19 | 6.22 |
| 2 | Alumina | 1.41 | 1.42 | 4.63* | 4.65* | 1.88* | 1.89* | 1.29* | 1.30* |
| 3 | Iron, protoxide | ..... | ..... | 3.78 | 3.79 | ..... | ..... | ..... | ..... |
| 4 | Lime | 0.52 | 0.52 | 4.62 | 4.64 | 0.15 | 0.15 | 0.05 | 0.05 |
| 5 | Magnesia | 0.26 | 0.26 | 0.56 | 0.56 | 0.25 | 0.25 | 0.11 | 0.11 |
| 6 | Manganese, protoxide | ..... | ..... | ..... | ..... | ..... | ..... | ..... | ..... |
| 7 | Nickel, sulphide | ..... | ..... | ..... | ..... | ..... | ..... | ..... | ..... |
| 8 | Zinc, sulphide | ..... | ..... | ..... | ..... | ..... | ..... | ..... | ..... |
| 9 | Potassa | ..... | ..... | 0.10 | 0.10 | ..... | ..... | ..... | ..... |
| 10 | Soda | ..... | ..... | 0.07 | 0.07 | ..... | ..... | ..... | ..... |
| 11 | Phosphoric acid | ..... | ..... | ..... | ..... | ..... | ..... | ..... | ..... |
| 12 | Barium, sulphate | ..... | ..... | ..... | ..... | ..... | ..... | ..... | ..... |
| 13 | Titanic acid | ..... | ..... | ..... | ..... | ..... | ..... | ..... | ..... |
| 14 | Chromium, sesquioxide | ..... | ..... | ..... | ..... | ..... | ..... | ..... | ..... |
| | Total | 7.46 | 7.49 | 43.75 | 43.91 | 13.16 | 13.26 | 7.64 | 7.68 |

* With trace of oxide of iron.

TABLE 26.—*Complete analyses of iron ores*—Continued.

| 487 | | 495 | | 501 | | 527 | | 530 | | 914 | | |
|---|---|---|---|---|---|---|---|---|---|---|---|---|
| *State:* TENNESSEE. *County:* Monroe. *Location:* Hale bank, Tellico. *Analysis No.:* 487. *Sampler:* Willis. *Chemist:* Whitfield. *Kind of ore:* Limonite. *Remarks:* From 500 tons of ore at bank. | | *State:* TENNESSEE. *County:* Blount. *Location:* Wilson bank, near Maryville. *Analysis No.:* 495. *Sampler:* Willis. *Chemist:* King. *Kind of ore:* Limonite. *Remarks:* From pile of ore for roasting. | | *State:* TENNESSEE. *County:* Wayne. *Location:* Marion furnace, Clifton. *Analysis No.:* 501. *Sampler:* Chauvenet. *Chemist:* White. *Kind of ore:* Hematite. *Remarks:* From exposed masses and streaks, and from loose lumps in old pit. | | *State:* TENNESSEE. *County:* Stewart. *Location:* "La Grange" and "Sheridan" banks. *Analysis No.:* 527. *Sampler:* Chauvenet. *Chemist:* King. *Kind of ore:* Limonite. *Remarks:* From 300 to 400 tons at furnace. | | *State:* TENNESSEE. *County:* Stewart. *Location:* Outlaw's mine, near Indian mound. *Analysis No.:* 530. *Sampler:* Chauvenet. *Chemist:* King. *Kind of ore:* Limonite. *Remarks:* From small pit; "pipe ore". | | *State:* TENNESSEE. *County:* Cocke. *Location:* W. R. Smith's land, Wolf Creek. *Analysis No.:* 914 *Sampler:* Willis. *Chemist:* King. *Kind of ore:* Specular. *Remarks:* From upper three feet of vein. | | |
| Natural ore. | Dried ore. | Natural ore. | Dried ore. | Natural ore. | Dried ore. | Natural ore. | Dried ore. | Natural ore. | Dried ore. | Natural ore. | Dried ore. | |
| ..... | ..... | 3.644 | ..... | ..... | ..... | ..... | ..... | ..... | ..... | ..... | ..... | |
| *Per cent.* | *Per cent.* | *Per cent.* | *Per cent.* | *Per cent.* | *Per cent.* | *Per cent.* | *Per cent.* | *Per cent.* | *Per cent.* | *Per cent.* | *Per cent.* | |
| 0.147 | 0.148 | 0.184 | 0.188 | 0.108 | 0.110 | 0.069 | 0.069 | 0.193 | 0.195 | 0.399 | 0.399 | 1 |
| 0.445 | 0.450 | 0.143 | 0.147 | 0.314 | 0.319 | 0.237 | 0.238 | 0.197 | 0.199 | 0.016 | 0.016 | 2 |
| 54.78 | 55.22 | 53.54 | 54.66 | 54.86 | 55.70 | 50.91 | 51.20 | 55.15 | 55.64 | 45.68 | 45.73 | 3 |
| 6.78 | 6.83 | 5.01 | 5.12 | 6.03 | 6.12 | 12.76 | 12.83 | 6.65 | 6.72 | 26.59 | 26.62 | 1 |
| 0.37 | 0.37 | 0.34 | 0.35 | 0.92 | 0.93 | 0.36 | 0.36 | 0.57 | 0.57 | 0.96 | 0.96 | 2 |
| 77.65 | 78.28 | 76.10 | 77.70 | 77.21 | 78.40 | 72.28 | 72.69 | 77.95 | 78.63 | 63.68 | 63.76 | 3 |
| 1.17 | 1.18 | 4.04 | 4.12 | 1.83 | 1.85 | 2.83 | 2.84 | 2.69 | 2.71 | 5.05 | 5.06 | 4 |
| ..... | ..... | Trace. | Trace. | 0.09 | 0.09 | 0.31 | 0.31 | Trace. | Trace. | ..... | ..... | 5 |
| ..... | ..... | ..... | ..... | ..... | ..... | ..... | ..... | ..... | ..... | ..... | ..... | 6 |
| ..... | ..... | ..... | ..... | ..... | ..... | ..... | ..... | ..... | ..... | ..... | ..... | 7 |
| 0.34 | 0.34 | 0.02 | 0.02 | 2.21 | 2.24 | 0.42 | 0.42 | 0.18 | 0.18 | 0.18 | 0.18 | 8 |
| 0.32 | 0.32 | 0.21 | 0.21 | 0.13 | 0.13 | 0.17 | 0.17 | 0.17 | 0.17 | 0.06 | 0.06 | 9 |
| 0.275 | 0.277 | ..... | ..... | 0.203 | 0.206 | 0.096 | 0.096 | 0.333 | 0.336 | 0.742 | 0.742 | 10 |
| ..... | ..... | ..... | ..... | ..... | ..... | ..... | ..... | ..... | ..... | ..... | ..... | 11 |
| ..... | ..... | 0.54 | 0.55 | ..... | ..... | ..... | ..... | ..... | ..... | ..... | ..... | 12 |
| ..... | ..... | 0.10 | 0.10 | ..... | ..... | ..... | ..... | ..... | ..... | ..... | ..... | 13 |
| ..... | ..... | ..... | ..... | ..... | ..... | ..... | ..... | ..... | ..... | ..... | ..... | 14 |
| ..... | ..... | ..... | ..... | ..... | ..... | ..... | ..... | ..... | ..... | ..... | ..... | 15 |
| ..... | ..... | ..... | ..... | ..... | ..... | ..... | ..... | ..... | ..... | ..... | ..... | 16 |
| ..... | ..... | ..... | ..... | ..... | ..... | ..... | ..... | ..... | ..... | ..... | ..... | 17 |
| ..... | ..... | ..... | ..... | ..... | ..... | ..... | ..... | ..... | ..... | ..... | ..... | 18 |
| ..... | ..... | ..... | ..... | ..... | ..... | ..... | ..... | ..... | ..... | ..... | ..... | 19 |
| ..... | ..... | ..... | ..... | ..... | ..... | ..... | ..... | ..... | ..... | ..... | ..... | 20 |
| ..... | ..... | ..... | ..... | ..... | ..... | ..... | ..... | ..... | ..... | ..... | ..... | 21 |
| 0.41 | 0.41 | ..... | ..... | ..... | ..... | ..... | ..... | ..... | ..... | 1.80 | 1.80 | 22 |
| 0.25 | 0.25 | ..... | ..... | ..... | ..... | ..... | ..... | ..... | ..... | 0.17 | 0.17 | 23 |
| 0.13 | 0.13 | 0.32 | 0.33 | 0.21 | 0.21 | 0.10 | 0.10 | 0.09 | 0.09 | 0.04 | 0.04 | 24 |
| ..... | ..... | 0.02 | 0.02 | ..... | ..... | 0.04 | 0.04 | 0.04 | 0.04 | 0.01 | 0.01 | 25 |
| 1.260 | 1.270 | 0.332 | 0.339 | 0.719 | 0.730 | 0.543 | 0.546 | 0.452 | 0.456 | 0.036 | 0.036 | 26 |
| ..... | ..... | ..... | ..... | ..... | ..... | ..... | ..... | ..... | ..... | ..... | ..... | 27 |
| 0.10 | 0.10 | 0.06 | 0.06 | 0.11 | 0.11 | 0.10 | 0.10 | 0.10 | 0.10 | 0.03 | 0.03 | 28 |
| 0.79 | ..... | 2.03 | ..... | 1.51 | ..... | 0.57 | ..... | 0.86 | ..... | 0.12 | ..... | 29 |
| 10.28 | 10.35 | 10.01 | 11.11 | 0.17 | 0.30 | 94.5 | 0.50 | 10.04 | 10.12 | 0.01 | 0.01 | 30 |
| 100.125 | 100.107 | 100.032 | 100.029 | 100.342 | 100.310 | 100.119 | 100.002 | 100.125 | 100.122 | 100.078 | 100.078 | |
| 8.14 | 8.20 | 6.70 | 6.84 | 7.21 | 7.32 | 13.52 | 13.59 | 7.51 | 7.58 | 32.71 | 32.75 | |
| 6.78 | 6.83 | 5.01 | 5.12 | 6.03 | 6.12 | 12.76 | 12.83 | 6.65 | 6.72 | 26.59 | 26.62 | 1 |
| 0.67* | 0.67* | 1.52 | 1.55 | 1.11 | 1.13 | 0.58 | 0.58 | 0.65 | *0.66 | 3.97 | 3.97 | 2 |
| ..... | ..... | ..... | ..... | ..... | ..... | ..... | ..... | ..... | ..... | ..... | ..... | 3 |
| 0.28 | 0.28 | 0.02 | 0.02 | 0.10 | 0.10 | 0.13 | 0.13 | 0.12 | 0.12 | 0.18 | 0.18 | 4 |
| 0.23 | 0.23 | 0.14 | 0.14 | 0.02 | 0.02 | 0.06 | 0.06 | 0.04 | 0.04 | ..... | ..... | 5 |
| ..... | ..... | ..... | ..... | ..... | ..... | ..... | ..... | ..... | ..... | ..... | ..... | 6 |
| ..... | ..... | ..... | ..... | ..... | ..... | ..... | ..... | ..... | ..... | ..... | ..... | 7 |
| ..... | ..... | ..... | ..... | ..... | ..... | ..... | ..... | ..... | ..... | ..... | ..... | 8 |
| 0.27 | 0.27 | ..... | ..... | ..... | ..... | ..... | ..... | ..... | ..... | 1.80 | 1.80 | 9 |
| 0.01 | 0.01 | ..... | ..... | ..... | ..... | ..... | ..... | ..... | ..... | 0.17 | 0.17 | 10 |
| ..... | ..... | ..... | ..... | ..... | ..... | ..... | ..... | ..... | ..... | ..... | ..... | 11 |
| ..... | ..... | ..... | ..... | ..... | ..... | ..... | ..... | ..... | ..... | ..... | ..... | 12 |
| ..... | ..... | ..... | ..... | ..... | ..... | ..... | ..... | ..... | ..... | ..... | ..... | 13 |
| ..... | ..... | ..... | ..... | ..... | ..... | ..... | ..... | ..... | ..... | ..... | ..... | 14 |
| 8.24 | 8.20 | 6.69 | 6.83 | 7.26 | 7.37 | 13.53 | 13.60 | 7.46 | 7.54 | 32.71 | 32.74 | |

* With trace of oxide of iron.

TABLE 26.—*Complete analyses of iron ores*—Continued.

| | | 931 | | 935 | | 952 | | 960 | |
|---|---|---|---|---|---|---|---|---|---|
| | | *State:* TENNESSEE. *County:* Carter. *Location:* Queen's Station bank, Elizabethton. *Analysis No.:* 931. *Sampler:* Willis. *Chemist:* King. *Kind of ore:* Limonite. *Remarks:* From pieces of ore at different openings. | | *State:* TENNESSEE. *County:* Johnson. *Location:* Wash Place bank, Little Doe creek. *Analysis No.:* 935. *Sampler:* Willis. *Chemist:* King. *Kind of ore:* Limonite. *Remarks:* From 5 tons of ore at bank. | | *State:* TENNESSEE. *County:* Johnson. *Location:* Baker bank, Roanes creek. *Analysis No.:* 952. *Sampler:* Willis. *Chemist:* King. *Kind of ore:* Limonite. *Remarks:* From pieces left at old pits. | | *State:* TENNESSEE. *County:* Sullivan. *Location:* Sharp's bank, near Bristol. *Analysis No.:* 960. *Sampler:* Willis. *Chemist:* King. *Kind of ore:* Specular with magnetite. *Remarks:* From ore found on Gray's Hill. | |
| | | Natural ore. | Dried ore. | Natural ore. | Dried ore. | Natural ore. | Dried ore. | Natural ore. | Dried ore. |
| | Specific gravity | | | | | | | | |
| | | *Per cent.* | *Per cent.* | *Per cent.* | *Per cent.* | *Per cent.* | *Per cent.* | *Per cent.* | *Per cent.* |
| 1 | Sulphur | 0.139 | 0.141 | 0.084 | 0.085 | 0.119 | 0.119 | 0.163 | 0.164 |
| 2 | Phosphorus | 0.154 | 0.156 | 0.214 | 0.216 | 0.160 | 0.161 | 0.038 | 0.038 |
| 3 | Iron, metallic | 57.65 | 58.36 | 54.18 | 54.72 | 57.68 | 57.89 | 56.47 | 56.69 |
| 1 | Silica | 4.57 | 4.62 | 5.69 | 5.75 | 3.80 | 3.81 | 6.09 | 6.11 |
| 2 | Iron, protoxide | 0.38 | 0.38 | 0.16 | 0.16 | 0.27 | 0.27 | 9.70 | 9.74 |
| 3 | Iron, peroxide | 81.81 | 82.77 | 77.08 | 77.85 | 81.94 | 82.25 | 69.72 | 69.98 |
| 4 | Alumina | 3.66 | 3.70 | 2.38 | 2.40 | 1.18 | 1.18 | 0.88 | 0.88 |
| 5 | Manganese, protoxide | 0.49 | 0.49 | 0.93 | 0.94 | 0.76 | 0.76 | 0.15 | 0.15 |
| 6 | Manganese, dioxide | | | | | | | | |
| 7 | Chromium, sesquioxide | | | | | | | | |
| 8 | Lime | 0.32 | 0.32 | 1.16 | 1.17 | 0.08 | 0.08 | 4.73 | 4.75 |
| 9 | Magnesia | 0.25 | 0.25 | 0.01 | 0.01 | 0.22 | 0.22 | 2.02 | 2.03 |
| 10 | Iron, disulphide | 0.256 | 0.259 | 0.153 | 0.155 | 0.214 | 0.214 | 0.260 | 0.261 |
| 11 | Iron, arsenide | | | | | | | | |
| 12 | Zinc, sulphide | | | | | | | | |
| 13 | Zinc, oxide | | | | | | | | |
| 14 | Barium, oxide | | | | | | | | |
| 15 | Nickel, sulphide | | | | | | | Trace. | Trace. |
| 16 | Nickel, oxide | | | | | | | | |
| 17 | Cobalt, sulphide | | | | | Trace. | Trace. | | |
| 18 | Cobalt, oxide | | | | | | | | |
| 19 | Copper, sulphide | | | | | Trace. | Trace. | | |
| 20 | Lead | | | | | | | | |
| 21 | Antimony, sulphide | | | | | | | | |
| 22 | Potassa | | | | | | | | |
| 23 | Soda | | | | | | | | |
| 24 | Carbonic acid | 0.09 | 0.09 | 0.39 | 0.39 | 0.14 | 0.14 | 4.97 | 4.99 |
| 25 | Sulphuric acid | 0.01 | 0.01 | 0.01 | 0.01 | 0.01 | 0.01 | 0.06 | 0.06 |
| 26 | Phosphoric acid | 0.352 | 0.356 | 0.488 | 0.493 | 0.367 | 0.368 | 0.087 | 0.087 |
| 27 | Titanic acid | | | | | | | | |
| 28 | Carbon in carbonaceous matter | 0.10 | 0.10 | 0.18 | 0.18 | 0.11 | 0.11 | 0.01 | 0.01 |
| 29 | Hygroscopic water | 1.15 | | 0.97 | | 0.36 | | 0.38 | |
| 30 | Water of composition | 6.60 | 6.67 | 10.46 | 10.55 | 10.50 | 10.53 | 1.06 | 1.06 |
| | Total | 100.038 | 100.015 | 100.061 | 100.058 | 99.951 | 99.942 | 100.117 | 100.108 |
| | ANALYSIS OF INSOLUBLE SILICEOUS MATTER. | | | | | | | | |
| | Per cent. of insoluble siliceous matter | 6.15 | 6.22 | 6.65 | 6.72 | 4.46 | 4.48 | 6.47 | 6.50 |
| 1 | Silica | 4.57 | 4.62 | 5.69 | 5.75 | 3.80 | 3.81 | 6.09 | 6.11 |
| 2 | Alumina | 1.22 | 1.23 | 0.71 | 0.72 | 0.65 | 0.65 | 0.38 | 0.38 |
| 3 | Iron, protoxide | | | | | | | | |
| 4 | Lime | 0.32 | 0.32 | 0.26 | 0.26 | | | | |
| 5 | Magnesia | 0.08 | 0.08 | | | 0.05 | 0.05 | Trace. | Trace. |
| 6 | Manganese, protoxide | | | | | | | | |
| 7 | Nickel, sulphide | | | | | | | | |
| 8 | Zinc, sulphide | | | | | | | | |
| 9 | Potassa | | | | | | | | |
| 10 | Soda | | | | | | | | |
| 11 | Phosphoric acid | | | | | | | | |
| 12 | Barium, sulphate | | | | | | | | |
| 13 | Titanic acid | | | | | | | | |
| 14 | Chromium, sesquioxide | | | | | | | | |
| | Total | 6.19 | 6.25 | 6.66 | 6.73 | 4.50 | 4.51 | 6.47 | 6.49 |

TABLE 26.—*Complete analyses of iron ores*—Continued.

| 967 | | 968 | | 970 | | 687 | | 605 | | 606 | | 615 | | |
|---|---|---|---|---|---|---|---|---|---|---|---|---|---|---|
| *State:* TENNESSEE. *County:* Carter. *Location:* Hodge bank, Stoney Creek. *Analysis No.:* 967. *Sampler:* Willis. *Chemist:* King. *Kind of ore:* Limonite. *Remarks:* From stock pile at furnace. | | *State:* TENNESSEE. *County:* Carter. *Location:* Taylor bank, Carter furnace, Stoney Creek. *Analysis No.:* 968. *Sampler:* Willis. *Chemist:* King. *Kind of ore:* Limonite. *Remarks:* From washed ore at Carter furnace. | | *State:* TENNESSEE. *County:* Carter. *Location:* Specular bank, Carter furnace, Stoney Creek. *Analysis No.:* 970. *Sampler:* Willis. *Chemist:* King. *Kind of ore:* Limonite and specular. *Remarks:* From stock pile at Carter furnace. | | *State:* VERMONT. *County:* Windsor. *Location:* Tyson furnace, Plymouth. *Analysis No.:* 687. *Sampler:* Benton. *Chemist:* Richmond. *Kind of ore:* Siderite. *Remarks:* From stock pile at furnace. | | *State:* VIRGINIA. *County:* Amherst. *Location:* Dover & Co.'s No. 11, Riverville. *Analysis No.:* 605. *Sampler:* Benton. *Chemist:* Gooch. *Kind of ore:* Specular and magnetite. *Remarks:* From heads of all drifts, main deposit. | | *State:* VIRGINIA. *County:* Amherst. *Location:* Dover & Co.'s, No. 11, Riverville. *Analysis No.:* 606. *Sampler:* Benton. *Chemist:* Gooch. *Kind of ore:* Micaceous hematite and magnetite. *Remarks:* From further ends of drifts, between shafts Nos. 2 and 3; also S. W. of shaft No. 3. | | *State:* VIRGINIA. *County:* Franklin. *Location:* Rocky Mt., Franklin C. H. *Analysis No.:* 615. *Sampler:* Benton. *Chemist:* Gooch. *Kind of ore:* Magnetite. *Remarks:* From 3 new shafts on westerly deposit, 10 to 20 feet deep. | | |
| Natural ore. | Dried ore. | Natural ore. | Dried ore. | Natural ore. | Dried ore. | Natural ore. | Dried ore. | Natural ore. | Dried ore. | Natural ore. | Dried ore. | Natural ore. | Dried ore. | |
| ..... | ..... | ..... | ..... | ..... | ..... | ..... | ..... | ..... | ..... | ..... | ..... | ..... | ..... | |
| *Per cent.* | *Per cent.* | *Per cent.* | *Per cent.* | *Per cent.* | *Per cent.* | *Per cent.* | *Per cent.* | *Per cent.* | *Per cent.* | *Per cent.* | *Per cent.* | *Per cent.* | *Per cent.* | |
| 0.098 | 0.099 | 0.066 | 0.067 | 0.069 | 0.069 | 2.158 | 2.160 | 0.352 | 0.352 | 0.579 | 0.579 | 0.364 | 0.364 | 1 |
| 0.074 | 0.075 | 0.056 | 0.057 | 0.338 | 0.339 | 0.010 | 0.010 | 0.103 | 0.103 | 0.001 | 0.001 | 0.018 | 0.018 | 2 |
| 34.28 | 34.68 | 49.73 | 50.46 | 53.96 | 54.15 | 32.24 | 32.27 | 48.47 | 48.50 | 54.88 | 54.92 | 53.59 | 53.66 | 3 |
| 3.38 | 3.42 | 13.68 | 13.87 | 12.04 | 12.08 | 11.31 | 11.32 | 21.58 | 21.60 | 14.00 | 14.01 | 14.67 | 14.69 | 1 |
| ..... | ..... | 0.43 | 0.44 | 0.87 | 0.87 | 40.19 | 40.22 | 6.03 | 6.03 | 13.67 | 13.68 | 26.79 | 26.82 | 2 |
| 48.95 | 49.51 | 70.48 | 71.52 | 76.04 | 76.31 | ..... | ..... | 62.35 | 62.39 | 63.01 | 63.05 | 46.33 | 46.39 | 3 |
| 2.38 | 2.41 | 4.55 | 4.62 | 2.46 | 2.47 | 3.74 | 3.74 | 4.94 | 4.94 | 2.93 | 2.93 | 2.77 | 2.77 | 4 |
| 2.72 | 2.75 | 1.08 | 1.10 | 0.14 | 0.14 | 2.56 | 2.56 | ..... | ..... | ..... | ..... | 0.12 | 0.12 | 5 |
| 32.29 | 32.66 | ..... | ..... | ..... | ..... | ..... | ..... | ..... | ..... | ..... | ..... | ..... | ..... | 6 |
| ..... | ..... | ..... | ..... | ..... | ..... | ..... | ..... | ..... | ..... | ..... | ..... | ..... | ..... | 7 |
| 0.56 | 0.57 | 1.56 | 1.58 | 0.23 | 0.23 | 1.74 | 1.74 | 0.28 | 0.28 | 0.73 | 0.73 | 4.21 | 4.22 | 8 |
| 0.17 | 0.17 | 0.48 | 0.48 | 0.10 | 0.10 | 7.26 | 7.27 | 0.37 | 0.37 | 0.26 | 0.26 | 2.80 | 2.80 | 9 |
| 0.041 | 0.042 | 0.110 | 0.112 | 0.111 | 0.111 | 3.747 | 3.750 | 0.320 | 0.320 | 0.300 | 0.300 | 0.681 | 0.682 | 10 |
| ..... | ..... | ..... | ..... | ..... | ..... | ..... | ..... | ..... | ..... | ..... | ..... | ..... | ..... | 11 |
| ..... | ..... | ..... | ..... | ..... | ..... | Trace. | Trace. | ..... | ..... | ..... | ..... | ..... | ..... | 12 |
| ..... | ..... | ..... | ..... | ..... | ..... | ..... | ..... | ..... | ..... | ..... | ..... | ..... | ..... | 13 |
| ..... | ..... | ..... | ..... | ..... | ..... | ..... | ..... | 1.18 | 1.18 | 2.11 | 2.11 | ..... | ..... | 14 |
| 0.18 | 0.18 | ..... | ..... | ..... | ..... | 0.24 | 0.24 | ..... | ..... | ..... | ..... | ..... | ..... | 15 |
| ..... | ..... | ..... | ..... | ..... | ..... | ..... | ..... | ..... | ..... | ..... | ..... | ..... | ..... | 16 |
| Trace. | Trace. | ..... | ..... | ..... | ..... | Trace. | Trace. | ..... | ..... | ..... | ..... | ..... | ..... | 17 |
| ..... | ..... | ..... | ..... | ..... | ..... | ..... | ..... | ..... | ..... | ..... | ..... | ..... | ..... | 18 |
| Trace. | Trace. | ..... | ..... | ..... | ..... | 0.20 | 0.20 | ..... | ..... | ..... | ..... | ..... | ..... | 19 |
| ..... | ..... | ..... | ..... | ..... | ..... | ..... | ..... | ..... | ..... | ..... | ..... | ..... | ..... | 20 |
| ..... | ..... | ..... | ..... | ..... | ..... | ..... | ..... | ..... | ..... | ..... | ..... | ..... | ..... | 21 |
| ..... | ..... | ..... | ..... | ..... | ..... | ..... | ..... | 0.99 | 0.99 | 0.54 | 0.54 | ..... | ..... | 22 |
| ..... | ..... | ..... | ..... | ..... | ..... | ..... | ..... | 0.14 | 0.14 | 0.10 | 0.10 | ..... | ..... | 23 |
| 0.25 | 0.25 | 0.39 | 0.39 | 0.06 | 0.06 | 28.29 | 28.31 | 0.21 | 0.21 | 0.54 | 0.54 | 1.01 | 1.01 | 24 |
| 0.02 | 0.02 | 0.02 | 0.02 | 0.02 | 0.02 | 0.15 | 0.15 | 0.45 | 0.45 | 1.04 | 1.04 | ..... | ..... | 25 |
| 0.166 | 0.169 | 0.129 | 0.131 | 0.773 | 0.776 | 0.023 | 0.023 | 0.239 | 0.239 | 0.141 | 0.141 | 0.042 | 0.042 | 26 |
| ..... | ..... | ..... | ..... | ..... | ..... | ..... | ..... | 0.07 | 0.07 | Trace. | Trace. | ..... | ..... | 27 |
| 0.04 | 0.04 | 0.02 | 0.02 | 0.03 | 0.03 | 0.22 | 0.22 | ..... | ..... | ..... | ..... | 0.01 | 0.01 | 28 |
| 1.14 | ..... | 1.45 | ..... | 0.36 | ..... | 0.08 | ..... | 0.07 | ..... | 0.07 | ..... | .013 | ..... | 29 |
| 7.89 | 7.97 | 5.79 | 5.87 | 6.71 | 6.73 | 0.34 | 0.34 | 0.85 | 0.85 | 0.52 | 0.52 | 0.87 | 0.87 | 30 |
| 100.177 | 100.161 | 100.169 | 100.153 | 99.944 | 99.927 | 100.090 | 100.083 | 100.060 | 100.059 | 99.961 | 99.951 | 100.433 | 100.424 | |
| 3.67 | 3.71 | 14.80 | 15.01 | 12.73 | 12.77 | 13.28 | 13.29 | 28.53 | 28.55 | 20.71 | 20.72 | 26.53 | 26.56 | |
| 3.38 | 3.42 | 13.68 | 13.87 | 12.04 | 12.08 | 11.31 | 11.32 | 21.58 | 21.60 | 14.00 | 14.01 | 14.67 | 14.69 | 1 |
| 0.22 | 0.22 | 0.91 | 0.92 | 0.61 | 0.61 | 1.37* | 1.37* | 4.12* | 4.12* | 2.92* | 2.92* | 2.46* | 2.46* | 2 |
| ..... | ..... | ..... | ..... | ..... | ..... | ..... | ..... | ..... | ..... | ..... | ..... | 4.28 | 4.29 | 3 |
| 0.20 | 0.02 | 0.14 | 0.14 | ..... | ..... | 0.34 | 0.34 | 0.01 | 0.01 | 0.05 | 0.05 | 2.79 | 2.79 | 4 |
| 0.04 | 0.04 | 0.08 | 0.08 | 0.07 | 0.07 | 0.10 | 0.10 | 0.31 | 0.31 | 0.21 | 0.21 | 2.29 | 2.29 | 5 |
| ..... | ..... | ..... | ..... | ..... | ..... | 0.06 | 0.06 | ..... | ..... | ..... | ..... | ..... | ..... | 6 |
| ..... | ..... | ..... | ..... | ..... | ..... | 0.16 | 0.16 | ..... | ..... | ..... | ..... | ..... | ..... | 7 |
| ..... | ..... | ..... | ..... | ..... | ..... | Trace. | Trace. | ..... | ..... | ..... | ..... | ..... | ..... | 8 |
| ..... | ..... | ..... | ..... | ..... | ..... | ..... | ..... | 0.01 | 0.01 | 0.46 | 0.46 | ..... | ..... | 9 |
| ..... | ..... | ..... | ..... | ..... | ..... | ..... | ..... | 0.11 | 0.11 | 0.06 | 0.06 | ..... | ..... | 10 |
| ..... | ..... | ..... | ..... | ..... | ..... | ..... | ..... | 0.028 | 0.028 | 0.002 | 0.002 | ..... | ..... | 11 |
| ..... | ..... | ..... | ..... | ..... | ..... | ..... | ..... | 1.32 | 1.32 | 3.04 | 3.04 | ..... | ..... | 12 |
| ..... | ..... | ..... | ..... | ..... | ..... | ..... | ..... | 0.07 | 0.07 | ..... | ..... | ..... | ..... | 13 |
| ..... | ..... | ..... | ..... | ..... | ..... | ..... | ..... | ..... | ..... | ..... | ..... | ..... | ..... | 14 |
| 3.66 | 3.70 | 14.81 | 15.01 | 12.72 | 12.76 | 13.34 | 13.35 | 28.458 | 28.478 | 20.742 | 20.752 | 26.40 | 26.52 | |

* With trace of oxide of iron.

TABLE 26.—*Complete analyses of iron ores*—Continued.

| | | 626 | | 632 | | 635 | | 636 | |
|---|---|---|---|---|---|---|---|---|---|
| | | *State:* VIRGINIA. *County:* Wythe. *Location:* Johnson bank, Little Red Island creek. *Analysis No.:* 626. *Sampler:* Benton. *Chemist:* Gooch. *Kind of ore:* Limonite. *Remarks:* From open cut now worked. | | *State:* VIRGINIA. *County:* Smyth. *Location:* Panic furnace property. *Analyses No.:* 632. *Sampler:* Benton. *Chemist:* Gooch. *Kind of ore:* Limonite. *Remarks:* From open cut. | | *State:* VIRGINIA. *County:* Wythe. *Location:* Ravenscliffe Furnace bank, Sayers & Oglesby furnace. *Analysis No.:* 635. *Sampler:* Benton. *Chemist:* Gooch. *Kind of ore:* Limonite. *Remarks:* From pile of washed ore at washer. | | *State:* VIRGINIA. *County:* Wythe. *Location:* Ravenscliffe furnace bank, Sayers & Oglesby furnace. *Analysis No.:* 636. *Sampler:* Benton. *Chemist:* Gooch. *Kind of ore:* Limonite. *Remarks:* From pile of unwashed ore from same pit as No. 635. | |
| | | Natural ore. | Dried ore. | Natural ore. | Dried ore. | Natural ore. | Dried ore. | Natural ore. | Dried ore. |
| | Specific gravity | | | | | | | | |
| | | *Per cent.* | *Per cent.* | *Per cent.* | *Per cent.* | *Per cent.* | *Per cent.* | *Per cent.* | *Per cent.* |
| 1 | Sulphur | 0.062 | 0.063 | 0.056 | 0.057 | 0.094 | 0.095 | 0.063 | 0.064 |
| 2 | Phosphorus | 0.083 | 0.085 | 0.125 | 0.127 | 0.156 | 0.158 | 0.165 | 0.167 |
| 3 | Iron, metallic | 56.29 | 57.47 | 46.61 | 47.51 | 56.29 | 56.97 | 42.23 | 42.77 |
| 1 | Silica | 4.94 | 5.04 | 11.47 | 11.69 | 4.70 | 4.76 | 17.64 | 17.86 |
| 2 | Iron, protoxide | 0.43 | 0.44 | | | 0.44 | 0.45 | 0.36 | 0.36 |
| 3 | Iron, peroxide | 79.85 | 81.53 | 66.55 | 67.81 | 79.73 | 80.68 | 59.79 | 60.55 |
| 4 | Alumina | 1.69 | 1.73 | 5.42 | 5.53 | 1.24 | 1.25 | 7.88 | 7.98 |
| 5 | Manganese, protoxide | 0.15 | 0.15 | | | 0.28 | 0.28 | 0.57 | 0.58 |
| 6 | Manganese, dioxide | | | 3.46 | 3.53 | | | | |
| 7 | Chromium, sesquioxide | | | | | | | | |
| 8 | Lime | 0.20 | 0.20 | 0.21 | 0.21 | 0.10 | 0.10 | 0.13 | 0.13 |
| 9 | Magnesia | 0.60 | 0.61 | 0.11 | 0.11 | 0.53 | 0.54 | 0.82 | 0.83 |
| 10 | Iron, disulphide | 0.116 | 0.118 | 0.050 | 0.050 | 0.176 | 0.178 | 0.118 | 0.120 |
| 11 | Iron, arsenide | | | | | | | | |
| 12 | Zinc, sulphide | | | | | | | | |
| 13 | Zinc, oxide | | | | | | | | |
| 14 | Barium, oxide | | | | | | | | |
| 15 | Nickel sulphide | | | 0.11 | 0.11 | | | | |
| 16 | Nickel, oxide | | | | | | | | |
| 17 | Cobalt, sulphide | | | Trace. | Trace. | | | | |
| 18 | Cobalt, oxide | | | | | | | | |
| 19 | Copper, sulphide | | | | | | | | |
| 20 | Lead | | | | | | | | |
| 21 | Antimony, sulphide | | | | | | | | |
| 22 | Potassa | 0.07 | 0.07 | | | | | 0.54 | 0.55 |
| 23 | Soda | 0.03 | 0.03 | | | | | 0.13 | 0.13 |
| 24 | Carbonic acid | 0.39 | 0.40 | 0.08 | 0.08 | 0.10 | 0.10 | 0.14 | 0.14 |
| 25 | Sulphuric acid | | | | | | | | |
| 26 | Phosphoric acid | 0.191 | 0.195 | 0.284 | 0.290 | 0.358 | 0.362 | 0.374 | 0.384 |
| 27 | Titanic acid | | | 0.16 | 0.16 | | | Trace. | Trace. |
| 28 | Carbon in carbonaceous matter | 0.09 | 0.09 | 0.02 | 0.02 | 0.06 | 0.06 | 0.03 | 0.03 |
| 29 | Hygroscopic water | 2.04 | | 1.88 | | 1.17 | | 1.23 | |
| 30 | Water of composition | 9.41 | 9.59 | 10.28 | 10.46 | 11.07 | 11.19 | 10.44 | 10.55 |
| | Total | 100.197 | 100.193 | 100.084 | 100.050 | 99.954 | 99.950 | 100.192 | 100.194 |
| | ANALYSIS OF INSOLUBLE SILICEOUS MATTER. | | | | | | | | |
| | Per cent. of insoluble siliceous matter | 5.80 | 5.91 | 13.10 | 13.35 | 5.28 | 5.34 | 23.92 | 24.22 |
| 1 | Silica | 4.94 | 5.04 | 11.47 | 11.69 | 4.70 | 4.76 | 17.64 | 17.86 |
| 2 | Alumina | 0.72* | 0.73* | 1.50 | 1.53 | 0.52* | 0.53* | 5.20* | 5.27* |
| 3 | Iron, protoxide | | | | | | | | |
| 4 | Lime | | | 0.05 | 0.05 | 0.06 | 0.06 | 0.11 | 0.11 |
| 5 | Magnesia | 0.05 | 0.05 | 0.06 | 0.06 | | | 0.33 | 0.33 |
| 6 | Manganese, protoxide | | | | | | | | |
| 7 | Nickel, sulphide | | | | | | | | |
| 8 | Zinc, sulphide | | | | | | | | |
| 9 | Potassa | 0.07 | 0.07 | | | | | 0.54 | 0.55 |
| 10 | Soda | 0.03 | 0.03 | | | | | 0.13 | 0.13 |
| 11 | Phosphoric acid | | | 0.004 | 0.004 | | | 0.008 | 0.008 |
| 12 | Barium, sulphate | | | | | | | | |
| 13 | Titanic acid | | | | | | | Trace. | Trace. |
| 14 | Chromium, sesquioxide | | | | | | | | |
| | Total | 5.81 | 5.92 | 13.084 | 13.334 | 5.28 | 5.35 | 23.958 | 24.258 |

* With trace of oxide of iron.

TABLE 26.—*Complete analyses of iron ores*—Continued.

| 652. | | 658 | | 659 | | 665 | | 674 | | 70 | | 72 and 73 | | |
|---|---|---|---|---|---|---|---|---|---|---|---|---|---|---|
| *State:* VIRGINIA. *County:* Alleghany. *Location:* Lucy Selina (Longdale) bank, Brushy mountain. *Analysis No.:* 652. *Sampler:* Benton. *Chemist:* Gooch. *Kind of ore:* Limonite. *Remarks:* From four pits 4 miles N. E. of furnace. | | *State:* VIRGINIA. *County:* Alleghany. *Location:* Lowmoor, Lowmoor station. *Analysis No.:* 658. *Sampler:* Benton. *Chemist:* Gooch. *Kind of ore:* Limonite. *Remarks:* From five pits on N. E. side of Fork run. | | *State:* VIRGINIA. *County:* Alleghany. *Location:* Lowmoor, Lowmoor station. *Analysis No.:* 659. *Sampler:* Benton. *Chemist:* Gooch. *Kind of ore:* Limonite. *Remarks:* From four tunnels on S. W. side of Fork run. | | *State:* VIRGINIA. *County:* Rockingham. *Location:* Fox Mountain bank. *Analysis No.:* 665. *Sampler:* Benton. *Chemist:* Gooch. *Kind of ore:* Limonite. *Remarks:* From pit ¼ mile S. W. from furnace No. 2. | | *State:* VIRGINIA. *County:* Rockingham. *Location:* Raines & Weaver banks, Mount Vernon furnace. *Analysis No.:* 674. *Sampler:* Benton. *Chemist:* Gooch. *Kind of ore:* Limonite and hematite. *Remarks:* From stock pile at furnace. | | *State:* WISCONSIN. *County:* Marinette. *Location:* Commonwealth mine, Sec. 32. *Analysis No.:* 70. *Sampler:* Putnam. *Chemist:* Gooch. *Kind of ore:* Martite (?) *Remarks:* From 200 tons of ore at shaft. | | *State:* WISCONSIN. *County:* Marinette. *Location:* Commonwealth mine, Sec. 34. *Analysis Nos.:* 72 and 73 *Sampler:* Putnam. *Chemist:* Gooch, Whitfield. *Kind of ore:* Specular. *Remarks:* From 700 tons of ore from 36- and 68-foot veins, and from sides of shaft in 14-foot vein. | | |
| Natural ore. | Dried ore. | Natural ore. | Dried ore. | Natural ore. | Dried ore. | Natural ore. | Dried ore. | Natural ore. | Dried ore. | Natural ore. | Dried ore. | Natural ore. | Dried ore. | |
| ..... | ..... | ..... | ..... | ..... | ..... | ..... | ..... | ..... | ..... | 4.980 | ..... | ..... | ..... | |
| *Per cent.* | *Per cent.* | *Per cent.* | *Per cent.* | *Per cent.* | *Per cent.* | *Per cent.* | *Per cent.* | *Per cent.* | *Per cent.* | *Per cent.* | *Per cent.* | *Per cent.* | *Per cent.* | |
| 0.104 | 0.105 | 0.007 | 0.007 | 0.007 | 0.007 | 0.010 | 0.010 | 0.004 | 0.004 | 0.370 | 0.370 | ..... | ..... | 1 |
| 0.463 | 0.467 | 0.636 | 0.642 | 0.761 | 0.772 | 0.215 | 0.218 | 0.103 | 0.104 | 0.172 | 0.172 | 0.224 | 0.224 | 2 |
| 51.66 | 52.14 | 43.84 | 44.25 | 42.70 | 43.33 | 41.17 | 41.71 | 51.30 | 51.65 | 59.61 | 59.64 | 59.36 | 59.48 | 3 |
| 9.97 | 10.06 | 22.87 | 23.08 | 21.25 | 21.56 | 20.03 | 20.29 | 9.68 | 9.75 | 5.71 | 5.71 | 7.81 | 7.83 | 1 |
| 0.36 | 0.36 | 0.54 | 0.54 | 0.27 | 0.27 | ..... | ..... | ..... | ..... | 7.51 | 7.51 | 0.09 | 0.99 | 2 |
| 73.18 | 73.86 | 61.93 | 62.51 | 60.64 | 61.54 | 58.60 | 59.46 | 73.28 | 73.78 | 76.36 | 76.40 | 83.69 | 83.87 | 3 |
| 2.35 | 2.37 | 1.78 | 1.80 | 3.71 | 3.76 | 6.71 | 6.80 | 2.43 | 2.45 | 4.22 | 4.22 | 1.97 | 1.97 | 4 |
| 0.56 | 0.57 | 0.05 | 0.05 | 0.19 | 0.19 | 0.62 | 0.63 | 0.15 | 0.15 | 0.11 | 0.11 | 0.32 | 0.32 | 5 |
| ..... | ..... | ..... | ..... | ..... | ..... | 0.32 | 0.32 | 2.84 | 2.86 | ..... | ..... | ..... | ..... | 6 |
| ..... | ..... | ..... | ..... | ..... | ..... | ..... | ..... | ..... | ..... | ..... | ..... | ..... | ..... | 7 |
| 0.22 | 0.22 | 0.13 | 0.13 | 0.04 | 0.04 | 0.17 | 0.17 | 0.07 | 0.07 | 0.46 | 0.46 | 0.86 | 0.86 | 8 |
| 0.12 | 0.12 | 0.05 | 0.05 | 0.26 | 0.26 | 0.09 | 0.09 | 0.22 | 0.22 | 1.38 | 1.38 | 1.34 | 1.34 | 9 |
| 0.205 | 0.207 | 0.013 | 0.013 | 0.013 | 0.013 | 0.010 | 0.010 | 0.008 | 0.008 | 0.694 | 0.694 | ..... | ..... | 10 |
| ..... | ..... | ..... | ..... | ..... | ..... | ..... | ..... | ..... | ..... | ..... | ..... | ..... | ..... | 11 |
| ..... | ..... | ..... | ..... | ..... | ..... | ..... | ..... | ..... | ..... | ..... | ..... | ..... | ..... | 12 |
| 0.37 | 0.37 | 0.35 | 0.35 | 0.16 | 0.16 | ..... | ..... | ..... | ..... | ..... | ..... | ..... | ..... | 13 |
| ..... | ..... | ..... | ..... | ..... | ..... | ..... | ..... | ..... | ..... | ..... | ..... | ..... | ..... | 14 |
| ..... | ..... | ..... | ..... | ..... | ..... | ..... | ..... | ..... | ..... | ..... | ..... | ..... | ..... | 15 |
| 0.16 | 0.16 | 0.02 | 0.02 | 0.21 | 0.21 | ..... | ..... | 0.14 | 0.14 | ..... | ..... | ..... | ..... | 16 |
| ..... | ..... | ..... | ..... | ..... | ..... | ..... | ..... | ..... | ..... | ..... | ..... | ..... | ..... | 17 |
| 0.02 | 0.02 | ..... | ..... | ..... | ..... | ..... | ..... | ..... | ..... | ..... | ..... | ..... | ..... | 18 |
| ..... | ..... | ..... | ..... | ..... | ..... | ..... | ..... | ..... | ..... | ..... | ..... | ..... | ..... | 19 |
| ..... | ..... | ..... | ..... | ..... | ..... | ..... | ..... | ..... | ..... | ..... | ..... | ..... | ..... | 20 |
| ..... | ..... | ..... | ..... | ..... | ..... | ..... | ..... | ..... | ..... | ..... | ..... | ..... | ..... | 21 |
| 0.18 | 0.18 | 0.14 | 0.14 | 0.06 | 0.06 | ..... | ..... | ..... | ..... | ..... | ..... | ..... | ..... | 22 |
| ..... | ..... | ..... | ..... | 0.03 | 0.03 | ..... | ..... | ..... | ..... | ..... | ..... | ..... | ..... | 23 |
| 0.07 | 0.07 | 0.07 | 0.07 | 0.11 | 0.11 | 0.14 | 0.14 | 0.07 | 0.07 | 0.16 | 0.16 | 0.41 | 0.41 | 24 |
| ..... | ..... | ..... | ..... | ..... | ..... | ..... | ..... | ..... | ..... | ..... | ..... | ..... | ..... | 25 |
| 1.060 | 1.070 | 1.456 | 1.470 | 1.742 | 1.768 | 0.498 | 0.504 | 0.237 | 0.239 | 0.396 | 0.396 | 0.512 | 0.513 | 26 |
| ..... | ..... | ..... | ..... | ..... | ..... | Trace. | Trace. | Trace. | Trace. | ..... | ..... | ..... | ..... | 27 |
| 0.07 | 0.07 | 0.06 | 0.06 | 0.06 | 0.06 | ..... | ..... | 0.15 | 0.15 | 0.12 | 0.12 | ..... | ..... | 28 |
| 0.91 | ..... | 0.93 | ..... | 1.46 | ..... | 1.27 | ..... | 0.67 | ..... | 0.05 | ..... | 0.21 | ..... | 29 |
| 10.51 | 10.60 | 0.54 | 0.63 | 0.55 | 0.69 | 11.28 | 11.41 | 0.89 | 0.95 | 2.90 | 2.90 | 1.95 | 1.95 | 30 |
| 100.315 | 100.307 | 99.929 | 99.913 | 99.755 | 99.751 | 99.837 | 99.833 | 99.835 | 99.837 | 100.070 | 100.060 | 100.062 | 100.053 | |
| 11.64 | 11.75 | 23.64 | 23.86 | 23.33 | 23.68 | 25.15 | 25.48 | 11.18 | 11.26 | 6.28 | 6.28 | 8.05 | 8.07 | |
| 9.97 | 10.06 | 22.87 | 23.08 | 21.25 | 21.56 | 20.03 | 20.29 | 9.68 | 9.75 | 5.71 | 5.71 | 7.81 | 7.83 | 1 |
| 1.36* | 1.37* | 0.62* | 0.62* | 1.81* | 1.84* | 5.05* | 5.12* | 1.38* | 1.39* | 0.50* | 0.50* | 0.21* | 0.21* | 2 |
| ..... | ..... | ..... | ..... | ..... | ..... | ..... | ..... | ..... | ..... | ..... | ..... | ..... | ..... | 3 |
| 0.02 | 0.02 | 0.01 | 0.01 | 0.03 | 0.03 | 0.10 | 0.10 | 0.07 | 0.07 | 0.04 | 0.04 | 0.05 | 0.05 | 4 |
| 0.10 | 0.10 | 0.05 | 0.05 | 0.13 | 0.13 | 0.02 | 0.02 | 0.10 | 0.10 | 0.01 | 0.01 | ..... | ..... | 5 |
| ..... | ..... | ..... | ..... | ..... | ..... | ..... | ..... | ..... | ..... | ..... | ..... | ..... | ..... | 6 |
| ..... | ..... | ..... | ..... | ..... | ..... | ..... | ..... | ..... | ..... | ..... | ..... | ..... | ..... | 7 |
| ..... | ..... | ..... | ..... | ..... | ..... | ..... | ..... | ..... | ..... | ..... | ..... | ..... | ..... | 8 |
| 0.18 | 0.18 | 0.14 | 0.14 | 0.06 | 0.06 | ..... | ..... | ..... | ..... | ..... | ..... | ..... | ..... | 9 |
| ..... | ..... | ..... | ..... | 0.03 | 0.03 | ..... | ..... | ..... | ..... | ..... | ..... | ..... | ..... | 10 |
| ..... | ..... | ..... | ..... | ..... | ..... | ..... | ..... | 0.20 | 0.20 | ..... | ..... | ..... | ..... | 11 |
| ..... | ..... | ..... | ..... | ..... | ..... | ..... | ..... | ..... | ..... | ..... | ..... | ..... | ..... | 12 |
| ..... | ..... | ..... | ..... | ..... | ..... | ..... | ..... | Trace. | Trace. | ..... | ..... | ..... | ..... | 13 |
| ..... | ..... | ..... | ..... | ..... | ..... | ..... | ..... | ..... | ..... | ..... | ..... | ..... | ..... | 14 |
| 11.03 | 11.73 | 23.69 | 23.90 | 23.31 | 23.65 | 25.20 | 25.53 | 11.25 | 11.33 | 6.26 | 6.26 | 8.07 | 8.09 | |

* With trace of oxide of iron.