PHC80-R-2B

History

CENSUS
[redacted]
HA
201
1980
ACX
pt. B

Part B

Chapter 4.
Census Promotion Program

Chapter 5.
Field Enumeration

1980

Census of Population and Housing

U.S. Department of Commerce
BUREAU OF THE CENSUS

1980 Census of Population and Housing

PHC80-R-2B

History

Part B

Chapter 4.
Census Promotion Program
Chapter 5.
Field Enumeration

Issued December 1986

U.S. Department of Commerce
Malcolm Baldrige, Secretary
Clarence J. Brown, Deputy Secretary
Robert Ortner, Under Secretary
for Economic Affairs

BUREAU OF THE CENSUS
John G. Keane, Director

BUREAU OF THE CENSUS

John G. Keane, Director
C. Louis Kincannon, Deputy Director
Roland H. Moore, Associate Director for Field Operations
William P. Butz, Associate Director for Demographic Fields
Peter A. Bounpane, Assistant Director for Demographic Censuses

DATA USER SERVICES DIVISION

Gerard C. Iannelli, Chief
Paul T. Zeisset, Assistant Chief
for Statistical Reports

ACKNOWLEDGMENTS—Many persons participated in the various activities of the 1980 census. Primary direction of the program was the responsibility of **Daniel B. Levine** and **George E. Hall,** then Associate Directors for Demographic Fields, assisted by **David L. Kaplan** and **Earle J. Gerson,** then Assistant Directors, and **Peter A. Bounpane,** Assistant Director for Demographic Censuses, in conjunction with **James W. Turbitt, Curtis T. Hill,** and **Rex L. Pullin,** then Associate Directors for Field Operations; **W. Bruce Ramsay,** then Associate Director for Information Technology; **Barbara A. Bailar,** Associate Director for Statistical Standards and Methodology; and **James D. Lincoln,** then Associate Director for Administration.

This report was prepared in the Data User Services Division by the Census History Staff, under the general supervision of **Frederick G. Bohme,** Chief, with the assistance of various people throughout the Census Bureau. Publication planning, design, composition, editorial review, and printing procurement were performed by the staff of the Publications Services Division under the general direction of **Walter C. Odom,** Chief; **Gerald A. Mann** and **Everett L. Dove,** Branch Chiefs.

Library of Congress Cataloging-in-Publication Data

(Revised for part B)

1980 census of population and housing.

Sup. of docs. no.: C 3.223/22:80-RZ-B
1. United States—Census, 20th, 1980. 2. United States—Statistical services—History. 3. United States—Census—History. I. United States. Bureau of the Census.
HA201 1980 304.6'0723 86-600030

For sale by Superintendent of Documents, U.S. Government Printing Office, Washington, D.C. 20402.

Preface

The following chapters are portions of the *1980 Census of Population and Housing: History* (PHC-R-2). This report describes in detail most aspects of the 1980 census, from its early stages of research and planning through the tabulation, publication, and dissemination of the final results. The detailed treatment includes, where appropriate, a discussion of some of the problems encountered in the implementing the census plan.

Reports on the 1980 Census of Population and Housing Which Have Appeared to Date

PHC-R-2A	Chapter 1.	Introduction and Overview
	Chapter 2.	Planning the Census
	Chapter 3.	Geography, Addresses, and Questionnaire Printing and Labeling
PHC-R-2B	Chapter 4.	Census Promotion Program
	Chapter 5.	Field Enumeration

Contents

Chapter 4. Census Promotion Program

(Page numbers here omit the chapter prefix, 4-, which appears as part of the number of individual pages and appendixes. Each chapter is paginated separately for convenience of issue)

	Page
INTRODUCTION	3
CENSUS PROMOTION OFFICE	3
How the Advertising Council Campaign Was Structured	4
SPECIAL MEDIA SUPPORT AND CONTACTS	6
Broadcasters Census Committee of Eighty	6
Contacts with Minority Media Organizations	6
MAJOR CENSUS PROMOTION OFFICE PROJECTS	7
Service Organizations	7
Trade Associations and Business Firms	8
Congressional Media Campaign	8
Other Federal Agencies	9
School Project	9
Local Projects	10
Celebrity Public Service Announcements (PSA's)	10
Census Film and Slide Show	10
Information Kits	10
Census Cartoons	12
FIELD PROMOTION	12
Field Public Information Network	12
Community Services Specialists	13
Complete-Count Committees	13
"Were You Counted?" Campaign	14
RESULTS AND EVALUATION	15

Chapter 4. Census Promotion Program

INTRODUCTION

The main focus of the 1980 census promotion campaign was to inform the public, whose cooperation is essential to the success of any census, of the importance of achieving as complete a count as possible, and of the confidentiality of the information they provided on their census questionnaires. More specifically, it was aimed at encouraging persons to fill out their questionnaires and, in mail census areas, mail them back to the district offices. After Census Day, a campaign was undertaken to remind those who had not yet responded to the census that it was not too late to be counted.

This chapter will outline the main topics related to 1980 promotion, drawing upon the more detailed published report compiled by Dr. H. Naylor Fitzhugh,[1] which focuses on activities of the Census Promotion Office and the Advertising Council.

CENSUS PROMOTION OFFICE

In the late summer of 1978, the Bureau opened the Census Promotion Office (CPO) and gave it overall responsibility for designing and supervising 1980 census promotion efforts.[2] An experienced marketing expert was hired to head the office and 30 professionals in various fields relating to promotion were engaged over the next 2 years, including several who were detailed from the Bureau's Public Information Office (PIO).

The goals of the CPO were to:

1. Assist the Bureau in achieving at least an 80-percent mail-return rate.
2. Reach at least 90 percent of the U.S. population with its messages.
3. Obtain an estimated $40 million worth of advertising exposure.
4. Evaluate the promotional effort, using an impartial outside agency to aid in Bureau appraisals of the program.
5. Prepare a written report to help guide future promotion efforts. (See "Results and Evaluation" section.)

The CPO worked closely with other Census Bureau units that undertook promotional activities. The Field Division was responsible for an extensive information network of public information coordinators and census information technicians, district office managers, community services specialists, and complete-count committees. Their activities are described later in this chapter. The role of other Bureau units—Minority Status Program, Director's Office, etc.—are discussed in the Fitzhugh report.

One of the central questions confronting the 1980 census promotion campaign was whether to seek a congressional appropriation for the estimated $40 million needed for paid advertising or to apply for a public-service campaign via the Advertising Council (the Ad Council). The decision to seek the latter was made in November 1977 and the Ad Council officially agreed to undertake the campaign in January 1978, before the CPO's inception.[3]

There was strong support for the paid advertising concept. Many people were concerned that in a voluntary or public-service campaign, the census advertising messages would not receive top priority and "prime time" exposure.

The Committee on National Statistics' Panel on Decennial Census Plans felt that the Census Bureau would be dependent on the willingness of the particular advertising agency chosen by the Ad Council to devote sufficient energy and resources to the campaign. If it paid for advertising, the Bureau could choose an advertising agency and control the content and quality of its output. Furthermore, with a public service campaign it might be difficult to concentrate promotion on groups most likely to be undernumerated, because the media serving minorities could least afford to carry free advertising.[4].

Despite this concern, the Bureau opted for the public-service approach for several reasons.

1. Since complete and accurate census data are important to the advertising media, the Ad Council viewed the 1980 census as a benefit to its business supporters and clients as well as an important public service.
2. Much of the census promotion effort was being conducted through voluntary organizations—especially those servicing minority communities. The Bureau could not ask these groups for voluntary support while paying the media for their time and space.
3. There was no assurance that Congress would appropriate money for a paid campaign, and valuable time could have been lost while waiting for congressional action.
4. Finally, even if advertising funds had been allocated, the Bureau would have had to spend a great deal of time in screening advertising agencies, and the selected agencies would have had to take much time and resist many pressures in choosing media.

[1]U.S. Department of Commerce. Bureau of the Census. *1980 Census Promotion Program: Procedures, Results, and Recommendations.* Washington, DC, 1981. Two unpublished reports on field promotional activities were used to round out this chapter: William C. Matney and Raymond L. Bancroft, "The 1980 Census Public Information Field Network—Final Report," and Christine Williams, "History of the Complete Count Committee Program."

[2]The office was officially established in March 1979.

[3]The Advertising Council tested its promotion plans in the dress rehearsal census conducted in the Richmond, VA, area in 1978.

[4]National Academy of Sciences, *Counting the People in 1980: An Appraisal of Census Plans.* See ch. 2 for the Panel on Decennial Census Plans.

Steps were instituted to overcome or offset the possible limitations of the public-service campaign. First, the media were reminded that census data are important to their operations. Second, the support of key media executives was enlisted. Third, media were encouraged to schedule census messages as close as possible to Census Day, when they would have maximum effect.

The CPO program also sought promotional support from sources other than the mass media. Many national organizations—social service groups, and business, trade, and professional associations—were solicited for help. Not only did they have a stake in accurate census data, but they also had the means of disseminating messages in support of the census through their publications and other channels of communications. A number of Federal and State agencies were also included in the CPO strategy because they, too, were interested in census data and had communications facilities.

Another important element of CPO strategy was to have the census message come from "fellow Americans" rather than from the Federal Government. Examples of this third-party support included newspaper articles, testimonials by noted personalities, and the creating of local complete-count committees.

THE ADVERTISING COUNCIL

The Advertising Council was organized in 1942 to disseminate messages to the American people in support of the World War II effort. The organization decided to continue in existence to provide publicity for deserving public service campaigns. The Census Bureau has benefited from the Council's services in each census since 1950. For 1980, the Ad Council played a central coordinating, facilitating, and implementing role in the advertising campaign,[5] which was a joint undertaking of the Census Bureau, the Council, a volunteer advertising agency, and a volunteer coordinator.

The Ad Council had primary responsibility for (1) selecting a major advertising agency (Ogilvy & Mather) to work on a voluntary basis for the 1980 census campaign, (2) obtaining commitments from print and broadcast media to carry census messages at no cost to the Bureau, (3) choosing a corporate executive to serve as volunteer coordinator, and (4) processing contracts with suppliers of products and services required for the campaign.

The Census Bureau's direct costs were limited to the production of advertising materials; the provision of such services as photography, filming, and graphic art work; and a service charge for Ad Council office and processing operations. The Bureau did not have to pay for media time and space or for the services of the volunteer advertising agency or the volunteer coordinator. (See "Budget" app. C to this publication series.)

How the Advertising Council Campaign Was Structured

A. Client (Census Bureau) Responsibilities
1. Delineate marketing and communications objectives
2. Provide background data—technical, administrative, etc.
3. Present the history of previous campaign results
4. Review research bearing on the present problem
5. Establish the overall budget and approve the detailed budget
6. Pay production costs promptly
7. Approve agency copy and execution
8. Track and report campaign results
9. Promote the campaign via its field organization

B. Volunteer Coordinator
1. Provide expertise, counsel, and guidance
2. Properly direct advertising to achieve objectives
3. Preside at meetings and presentations
4. Develop letters for media mailings
5. Assist general campaign promotion and enhancement

C. Volunteer Advertising Agency
1. Conduct research
2. Develop creative strategy and rationale
3. Write the advertising
4. Test copy
5. Produce finished advertising
6. Bill clients for production costs

D. Advertising Council
1. Manage and coordinate overall effort
2. Check adherence to Council criteria and policies
3. Prepare detailed budget
4. Control media scheduling
5. Reproduce and distribute advertising to the media
6. Measure and report media coverage
7. Obtain copy clearances from client and volunteer coordinator
8. Arrange press releases and press conferences
9. Arrange necessary meetings and prepare progress reports

There were four distinct advertising campaigns. Two were addressed to the general public, one emphasizing the precensus message "Answer the Census—We're Counting on You," and the other carrying the postcensus slogan "It's Not Too Late" (to mail back a questionnaire or respond to an enumerator). The third campaign was addressed to business persons, and a fourth was devoted to recruiting census enumerators.

The target for the general campaigns was all U.S. households, with minorities portrayed as mainstream Americans. The tone was to be positive and inviting, with special care taken to communicate the message that the census belongs to and serves the people. The census was to be portrayed as a tool for the wise allocation of resources, for getting help where it is needed.

The slogan adopted was "Answer the Census—We're Counting on You," with the related theme "Can We Count on You? You Can Count on Me." The slogan was presented in such a way that it seemed to refer to neighbors and fellow citizens, not to the Census Bureau or to the Federal Government. Secondary messages stressed that the data collected in the census are not available anywhere else and that answers are kept confidential.

The objective of the business campaign was to convince business managers to encourage their employees and customers to answer the census. The target was owners and managers of

[5]The 1980 promotional campaign was frequently referred to as "synegistic" because it involved three major types of promotion working together—advertising, public relations, and publicity—and several Bureau units, in addition to the Ad Council and the advertising agency. See p. 114 of the Fitzhugh report for the differences and similarities in advertising, public relations, and publicity.

business firms of various sizes, but particularly those of large firms. The message was that census data provide information that helps the manager's company and community.

The aim of the enumerator campaign was to convince eligible individuals to become 1980 census enumerators. The message was that census-taking is an important and interesting job that would enable one to earn extra money.

The Ad Council disseminated census materials to a wide variety of media: television and radio stations, newspapers, business and consumer magazines, and company publications. In addition, it distributed transit cards (placards for buses, subways, etc.) and posters. The materials included the following:

1. Television advertisements featuring the "Answer the Census" theme were produced in 60-, 30-, 20-, and 10-second segments in English and 60-, 30-, and 10-second segments in Spanish. The "It's Not Too Late" theme was executed in 30- and 10-second segments, in English only.
2. For radio, a series of 60-, 30-, 20-, and 10-second "Answer the Census" spots were recorded in English and Spanish, and in addition, "live" copy was provided to broadcasters. "It's Not Too Late" spots in 60-, 30-, 20-, and 10-second executions, in English only, were also prepared.
3. General-circulation magazines were sent a series of black and white "Answer the Census" and "It's Not Too Late" advertisements in reproducible form measuring 7"x10" and 2 1/4"x5".
4. Six 60-line and four 250-line newspaper advertisements featuring the theme "Answer the Census" were produced in English, as were two 60-line "It's Not Too Late" advertisements.
5. "Answer the Census" transit cards in English only were produced in six sizes and "It's Not Too Late" attachments were designed for use with the transit cards after April 1.
6. Outdoor posters with the message "Answer the Census" were produced in English, in four sizes: 60"x46", 42"x84", 16'4"x8'8" and 48'x14'. Posters were also produced in almost a dozen languages other than English.
7. The materials created for the business campaign consisted of black and white advertisements to be used in business magazines. The "Answer the Census" advertisements were 7"x10", 2"x5", and 2"x10".
8. Enumerator campaign materials were produced for the full range of media—magazines, newspapers, radio, television, outdoor posters, etc.

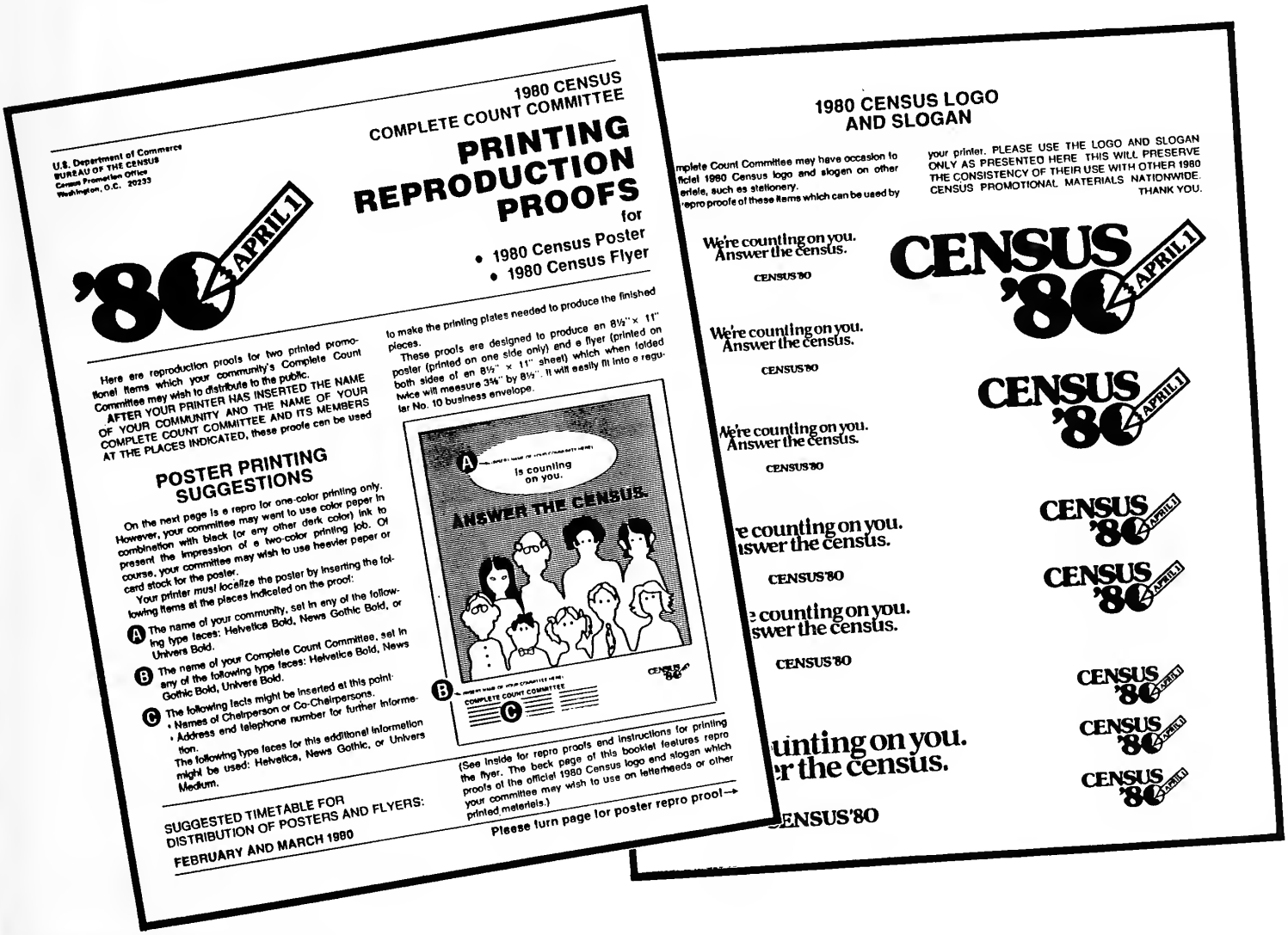
U.S. Department of Commerce
BUREAU OF THE CENSUS
Census Promotion Office
Washington, D.C. 20233

1980 CENSUS
COMPLETE COUNT COMMITTEE

PRINTING REPRODUCTION PROOFS for
• 1980 Census Poster
• 1980 Census Flyer

'80 APRIL 1

Here are reproduction proofs for two printed promotional items which your community's Complete Count Committee may wish to distribute to the public. AFTER YOUR PRINTER HAS INSERTED THE NAME OF YOUR COMMUNITY AND THE NAME OF YOUR COMPLETE COUNT COMMITTEE AND ITS MEMBERS AT THE PLACES INDICATED, these proofs can be used to make the printing plates needed to produce the finished pieces.

These proofs are designed to produce an 8½" × 11" poster (printed on one side only) and a flyer (printed on both sides of an 8½" × 11" sheet) which when folded twice will measure 3⅝" by 8½". It will easily fit into a regular No. 10 business envelope.

POSTER PRINTING SUGGESTIONS

On the next page is a repro for one-color printing only. However, your committee may want to use color paper in combination with black (or any other dark color) ink to present the impression of a two-color printing job. Of course, your committee may wish to use heavier paper or card stock for the poster.

Your printer *must* localize the poster by inserting the following items at the places indicated on the proof:

A The name of your community, set in any of the following type faces: Helvetica Bold, News Gothic Bold, or Univers Bold.

B The name of your Complete Count Committee, set in any of the following type faces: Helvetica Bold, News Gothic Bold, Univers Bold.

C The following facts might be inserted at this point:
• Names of Chairperson or Co-Chairpersons.
• Address and telephone number for further information.
The following type faces for this additional information might be used: Helvetica, News Gothic, or Univers Medium.

SUGGESTED TIMETABLE FOR DISTRIBUTION OF POSTERS AND FLYERS:
FEBRUARY AND MARCH 1980

(See inside for repro proofs and instructions for printing the flyer. The back page of this booklet features repro proofs of the official 1980 Census logo and slogan which your committee may wish to use on letterheads or other printed materials.)

Please turn page for poster repro proof→

1980 CENSUS LOGO AND SLOGAN

mplete Count Committee may have occasion to ficial 1980 Census logo and slogan on other erials, such as stationery. repro proofs of these items which can be used by your printer. PLEASE USE THE LOGO AND SLOGAN ONLY AS PRESENTED HERE. THIS WILL PRESERVE THE CONSISTENCY OF THEIR USE WITH OTHER 1980 CENSUS PROMOTIONAL MATERIALS NATIONWIDE. THANK YOU.

We're counting on you. Answer the census.
CENSUS'80

CENSUS '80 APRIL 1

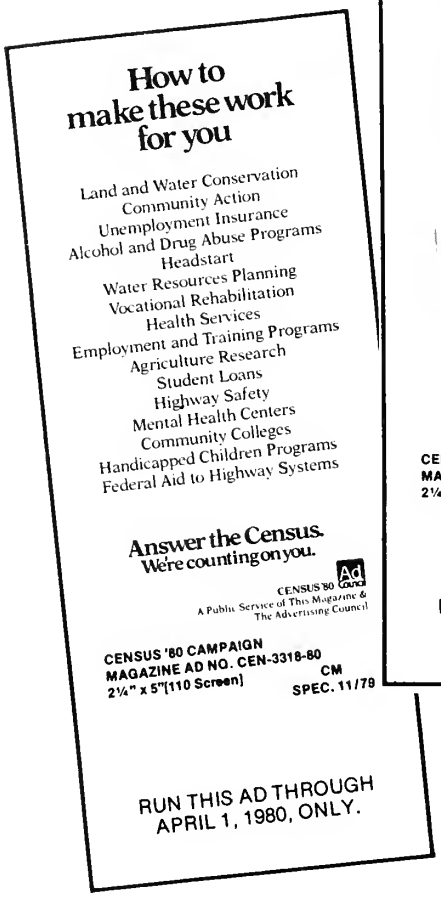

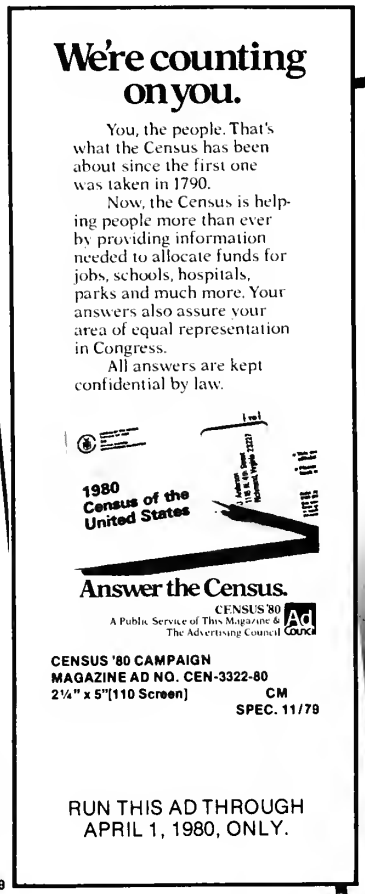

SPECIAL MEDIA SUPPORT AND CONTACTS

Broadcasters Census Committee of Eighty

In the fall of 1979, the CPO and the Office of the Secretary of Commerce organized an *ad hoc* Broadcasters Census Committee of Eighty (1980 and 80 members) to support and supplement the media contacts of the Ad Council. The Committee was composed of leading owners and managers of broadcasting stations throughout the United States, including influential minority broadcasters. The primary concern of the Committee was to help obtain a complete count by seeing that census messages were aired during prime time (when there are large audiences).

The total number of stations involved in this undertaking, counting those belonging to or affiliated with the 80 broadcasters, was over 400. From October 1979 to March 1980, the Committee members spoke at State broadcasting association meetings and arranged local meetings of broadcasters.

Although Committee members were generally associated with commercial stations, support was also obtained from public broadcasters.

Contacts With Minority Media Organizations

Special activities were undertaken to gain the maximum possible exposure through minority media. Support was solicited from various associations or organizations of Hispanic broadcasters, including: Latinos in Communication, Southwest Spanish Broadcasters Association, Spanish International Network, National Association of Spanish Broadcasters, and Latinos in Public Broadcasting. The Spanish International Network, which had affiliated stations in 16 cities, sponsored a nationwide live telecast on April 5, 1980. The show featured many well known Hispanic entertainment personalities , political leaders, and other celebrities and was aimed at helping Spanish-speaking persons to complete the census form.

A number of Black media (including electronic and print) organizations were also contacted for assistance: National Association of Black Owned Broadcasters, Black Media Coalition, National Newspaper Publishers Association, Black Media, Inc., Capital Press Club, and National Association of Media Women.

There were no national organizations for the Asian and Pacific Islander media, so contacts were concentrated on regional and

local media groups, individuals, community organizations, and refugee assistance centers.

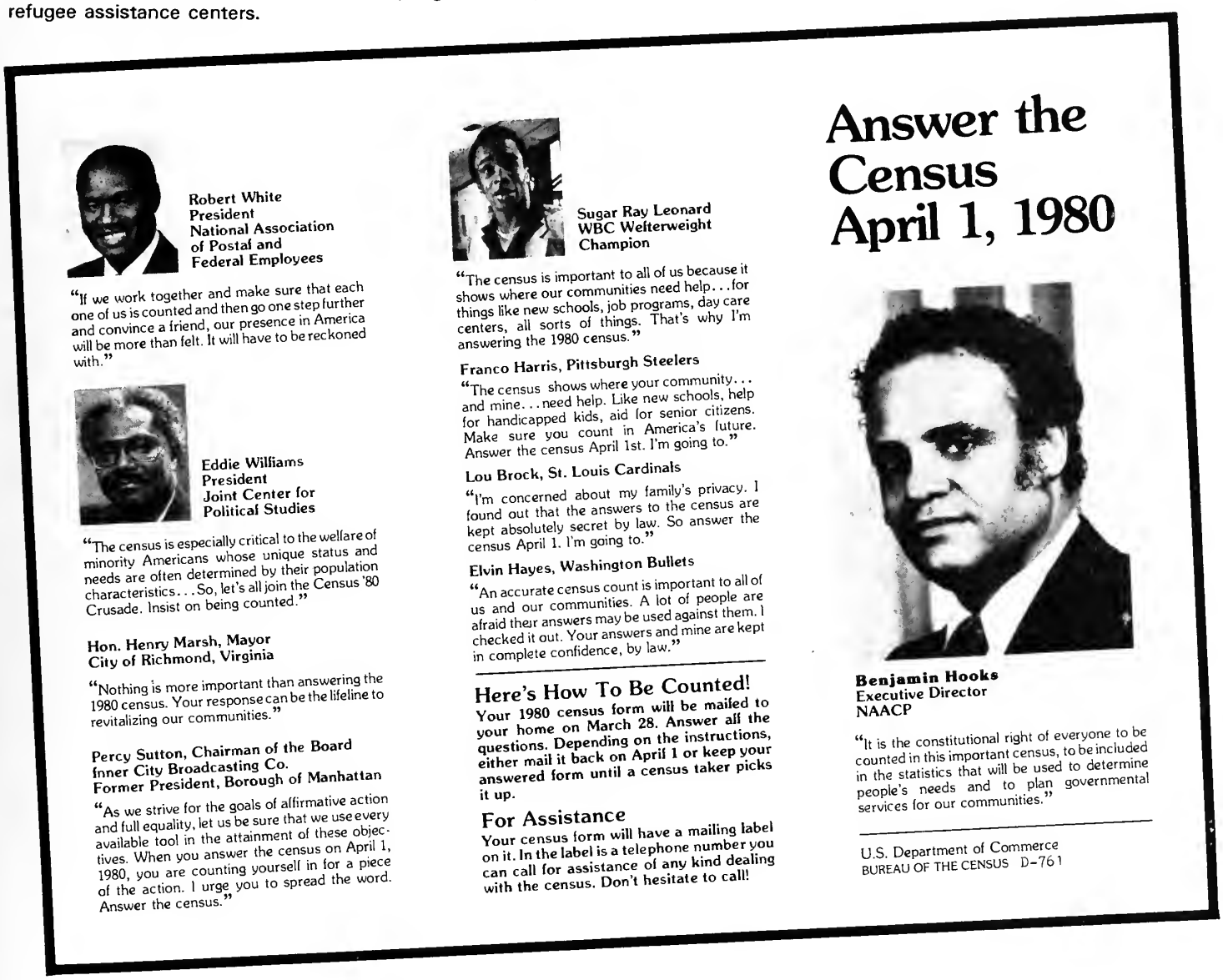

Robert White
President
National Association of Postal and Federal Employees

"If we work together and make sure that each one of us is counted and then go one step further and convince a friend, our presence in America will be more than felt. It will have to be reckoned with."

Eddie Williams
President
Joint Center for Political Studies

"The census is especially critical to the welfare of minority Americans whose unique status and needs are often determined by their population characteristics. . . So, let's all join the Census '80 Crusade. Insist on being counted."

Hon. Henry Marsh, Mayor
City of Richmond, Virginia

"Nothing is more important than answering the 1980 census. Your response can be the lifeline to revitalizing our communities."

Percy Sutton, Chairman of the Board
Inner City Broadcasting Co.
Former President, Borough of Manhattan

"As we strive for the goals of affirmative action and full equality, let us be sure that we use every available tool in the attainment of these objectives. When you answer the census on April 1, 1980, you are counting yourself in for a piece of the action. I urge you to spread the word. Answer the census."

Sugar Ray Leonard
WBC Welterweight Champion

"The census is important to all of us because it shows where our communities need help. . . for things like new schools, job programs, day care centers, all sorts of things. That's why I'm answering the 1980 census."

Franco Harris, Pittsburgh Steelers

"The census shows where your community. . . and mine. . . need help. Like new schools, help for handicapped kids, aid for senior citizens. Make sure you count in America's future. Answer the census April 1st. I'm going to."

Lou Brock, St. Louis Cardinals

"I'm concerned about my family's privacy. I found out that the answers to the census are kept absolutely secret by law. So answer the census April 1. I'm going to."

Elvin Hayes, Washington Bullets

"An accurate census count is important to all of us and our communities. A lot of people are afraid their answers may be used against them. I checked it out. Your answers and mine are kept in complete confidence, by law."

Here's How To Be Counted!

Your 1980 census form will be mailed to your home on March 28. Answer all the questions. Depending on the instructions, either mail it back on April 1 or keep your answered form until a census taker picks it up.

For Assistance

Your census form will have a mailing label on it. In the label is a telephone number you can call for assistance of any kind dealing with the census. Don't hesitate to call!

Answer the Census April 1, 1980

Benjamin Hooks
Executive Director
NAACP

"It is the constitutional right of everyone to be counted in this important census, to be included in the statistics that will be used to determine people's needs and to plan governmental services for our communities."

U.S. Department of Commerce
BUREAU OF THE CENSUS D-761

MAJOR CENSUS PROMOTION OFFICE PROJECTS

Service Organizations

The CPO encouraged influential service organizations to use their communications facilities for promoting the census, and tried to persuade them either to publish census materials or to develop messages themselves, to have their national conventions endorse the census, or to undertake any other actions supportive of the census.[6]

The national organizations program was launched in mid-July 1979. Lists of major organizations were obtained and screened. Beginning in late July 1979 personal visits were made to those based in Washington, D.C. In early November 1979, an informational package was mailed to the headquarters of 75 national groups. As a result of the contacts and mailing, several organizations developed special census campaigns. For example: the American Federation of Labor-Congress of Industrial Organizations (AFL-CIO) endorsed the census in its November 1979 national convention; conducted a special mailing, using census materials, to its 1,800 regional affiliates; had articles inserted in labor publications; and had union officials participate in an interview with the Director of the Census Bureau that was aired on 300 radio stations. The American Hospital Association, using CPO materials, designed a campaign for staff and patients of 2,000 hospitals.

Arrangements were also made with the Boy Scouts of America to engage a large portion of its 85,000 units and over 2 million scouts in the door-to-door distribution of some 30 million special census flyers. The Census Bureau shipped varying quantities of the flyer to approximately 1,200 addresses provided by the Boy

[6]The CPO's national organization effort was directed at nonminority groups. Contacts with minority organizations were handled through the Bureau's Minority Statistics Program.

Scouts. Adult leaders then supervised the breakdown of each shipment into smaller quantities for individual youth members to deliver on the weekends during March 1980, just before Census Day.

In total, over 600 national associations responded to the Bureau's request for support.

Trade Associations and Business Firms

The CPO also approached trade associations and business firms to obtain the use of their resources for communicating with employees, customers, distributors, dealers, and the general public. Trade associations were asked to encourage their member firms to combine the promotion of the census with their own marketing, advertising, public relations, and employee relations activities.

Cooperation had been obtained prior to the fall of 1979 from the fast food, grocery, and dairy industries. During this period, some calendar manufacturers also had consented to add the words "Census Day" in the April 1 box on their 1980 calendars.

As a result of this project, many businesses, associations, and firms lent important assistance to the census effort. The American Society of Association Executives conducted a special mailing to 8,000 member organizations, published census articles in its newsletter, and held a Washington briefing for 200 representatives of member organizations conducted by the Director and other Census Bureau officials. The Food Marketing Institute mailed 1980 census materials to its 950 members, asking them to (a) permit census representatives to display posters and other promotional materials, (b) encourage employees and customers to read the materials, and (c) carry census messages in their advertising and on their grocery bags. The Institute also included an article in its March 1980 newsletter reminding members to support the promotional effort. A major accomplishment was the participation of the Nation's top five grocery chains. As just one example, Safeway printed a census message on over 13 million cartons of milk sold during the last 2 weeks of March 1980.

Typical of the cooperation from retail establishments was the Sears, Roebuck, and Co. census reminder printed on more than 25 million March 1980 billings. The Goodyear blimp flashed census messages over Los Angeles, Houston, and Miami for a 1-month period. The General Cinema Corporation, the Nation's largest movie theater chain, showed a 10-second public service announcement in its theaters from March 21 to April 3, 1980.

Congressional Media Campaign

The basic objective of the congressional media campaign was to gain the cooperation of the 435 Representatives and the 100 Senators in educating their constituents about the census through their established media channels or other channels available to them. Members of Congress provided third-party validation in carrying the census message and provided an important means in generating attention at the local level.

The CPO worked through the congressional press secretaries to accomplish the following:

1. Direct dissemination of information regarding the census via print and broadcast communications channels that individual members had already established—newsletters, speeches, newspaper columns, or press releases.
2. Establishment of a referral point for hometown or Washington-based local reporters who might be considering doing a census story.
3. Provision of support in handling the additional constituent and media pressures brought on by the census.
4. Taping of radio and television appearances by members in support of the census, particularly for the weekend before Census Day—March 29-30, 1980. This was the most important goal of the congressional media campaign, because it was believed that broadcasters, particularly radio, reach those persons who are not frequently exposed to printed publications and who are also more likely to be undercounted.

In June 1979, questionnaires were mailed to the press secretaries in each congressional office with the primary purpose of eliciting their information requirements relating to the 1980 census. The results of this mailout confirmed the need for materials such as those already being prepared. Promotional kits (see "Information Kits") were hand-delivered to the congressional offices between mid-November 1979 and January 1980. Standard texts went into each kit at the time of distribution, and specialized materials were offered to the press aide depending upon the character of the member's constituency, e.g., whether his/her district contained a significant proportion of Black, Hispanic, or rural Americans.

Three form letters for responding to constituents were also prepared for use by the congressional offices: one dealt with the census in general, another with the minority undercount problem, and the third with confidentiality. Other mailouts to the offices consisted of brochures, factsheets, and public service announcement scripts.

Two congressional staff briefings were also conducted: one, in late February 1980, for congressional aides who worked in local offices and another in mid-March for Washington-based staff people.

As a result of these contacts, more than half of the Senators and Representatives undertook some kind of promotion activity on behalf of the 1980 census. A postcensus mailing to their offices drew responses from just over half of the Members, and indicated that the following activities had been undertaken.

- 17 million households mailed information on the census
- 44 radio and television shows produced and most aired in every station in the Member's district or State
- 72 editorial columns issued
- 48 public service announcements and 28 radio news spots taped and distributed
- 55 press releases issued

Other Federal Agencies

Efforts by the Census Bureau to obtain promotional support from other Federal Government agencies were predicated upon the fact that (1) the agencies depend on census data in the design and planning of their operations, and (2) they have large constituencies (both clients and employees) to whom the agency's support of the census would be viewed as dependable third-party validation. The Bureau requested that the agencies put census support messages in newsletters, bulletin boards, speeches, broadcasts, envelope inserts, etc.

Help was received from a number of agencies including the Executive Office of the President, the U.S. Postal Service, the Social Security Administration, the Office of Management and Budget, and the Departments of Agriculture, Health and Human Services, Defense, Justice, and the Treasury. One of the major activities was the inclusion of a census message in some 40 million social security checks mailed out in March 1980 at no cost to the Bureau.

School Project

President Carter issued a proclamation urging public support of the census and emphasizing the confidentiality of the information provided. (See ch. 1 for a facsimile.)

The school project was aimed at creating awareness of the census among students in grades 4 through 12 and their families.

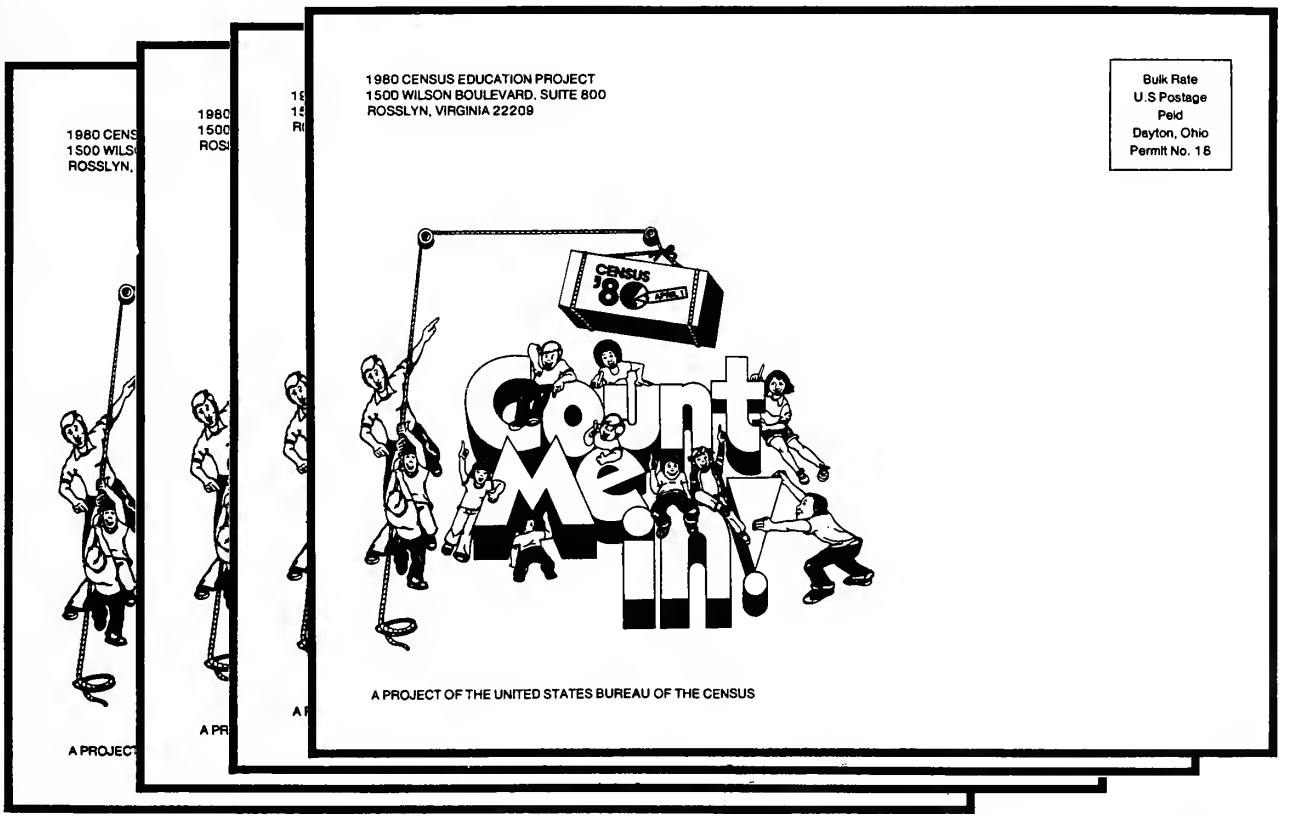

With the younger children, the goal was to involve parents and other family members through take-home assignments. For teenagers, there was an additional aim: in many households where adults encountered language or other reading difficulties, the goal was to involve the older school children in actually filling the questionnaires. It was also expected that teachers would support the census and that their influence could reach well beyond the classroom into their other community activities.

In January 1980, curriculum packages were mailed to each of 106,500 schools in the country. The elementary school package contained reproduction masters for four lesson activities for grades 4-6. The secondary school package contained eight lessons for grades 7-12. About 17,000 schools received both kits, requiring the distribution of a total of 123,500 kits. In addition to the lesson masters, each kit also contained two census posters and a letter from the Director of the Census Bureau.

An additional 1,000 sets of both the elementary and secondary kits were produced on high-grade reproducible paper, and were used to supplement the mailing of regular kits for use in schools or school systems where reproduction facilities were available. Three thousand sets of the elementary and secondary lessons were also developed in Spanish and were distributed upon request.

The mailout of kits was preceded and accompanied by a limited number of promotional activities, including national press releases in June 1979 and January 1980, personal contacts with key education officials, and media events such as the Director of the Census Bureau's teaching an elementary school class in the District of Columbia.

The school materials reached an audience estimated at about 10 million students.

Local Projects

In June 1979, the CPO sent letters to the more than 300 census statistical area key persons asking them if they could spare time during the following year to help the Bureau in its 1980 census promotion effort. A key person was generally a city or county planning official who served, without remuneration, as a liaison between the Bureau and a local census statistical area committee—a group that worked with the Census Bureau in defining small areas, such as tracts, neighborhoods, etc., within each metropolitan area.

By early October 1979, more than 90 percent of the key persons had indicated they would participate. Various materials were sent to them in three separate mailings beginning in mid-October, including model speeches suitable for delivery to general audiences. Shortly after Census Day, a note was mailed to key persons urging them to continue to give speeches, interviews, etc., for a while longer. The amount of activity undertaken by key persons varied. The Macomb County, MI, Planning Commission was one of the most active units. It reprinted and distributed 3,000 census posters to banks, stores, restaurants, schools, and libraries. It also developed an 8-page tabloid dealing exclusively with the local significance of the census and mailed it to each of the 225,000 households in the county.

Another localized project involved sending flyers, suitable for reproduction and posting on bulletin boards, to each police chief and sheriff in the United States. The flyer detailed Bureau plans for sending enumerators into the field and showed how official workers could be identified. It was designed to reduce the problem of unauthorized persons impersonating census workers.

Celebrity Public Service Announcements (PSA's)

The CPO engineered the production of some 44 PSA's by celebrities who contributed their time, endorsing the census and urging audience cooperation. The popularity of the celebrities was counted upon to ensure interest in the materials and messages. These featured the Director of the Census Bureau, the First Lady (Mrs. Rosalyn Carter), a star of "Star Trek" (George Takei), National Football League players (Efren Herrera, Franco Harris, and Roger Staubach), baseball stars Lou Brock and Luis Tiant, golfer Chi Chi Rodriguez, tennis professional Martina Navratilova, boxing champion Sugar Ray Leonard, and basketball players Pete Maravich and Elvin Hayes.

These celebrities recorded television and radio postcensus "It's Not Too Late" as well as precensus "Answer the Census" messages. Bilingual stars taped segments in their other language. In many cases, the personalities granted the use of their homes for the filming.

Census Film and Slide Show

A 10-minute promotional film, entitled "Everyone Counts," was produced for use by the media and at meetings, presentations, school classes, etc. The film was aimed at a wide variety of audiences and it was hoped that it would stimulate a high mail-return rate. As with other promotional materials, a conscious effort was made to include Blacks, Hispanics, and Asians in the scenes. In order to cater to Spanish-language theater and other audiences, a Spanish-language soundtrack was developed. While there was no film specifically for Black audiences, Black-oriented audio-visual materials had been produced by other Bureau units, such as the Community Services Program. Three hundred prints (270 English and 30 Spanish) of the film were produced in 35mm format and distributed as a short subject to movie distributors throughout the country; it is estimated that over 2 million persons saw the film. Six hundred 16mm copies were distributed to the 409 census district offices and the 12 regional offices for use by the district office managers, census information technicians, community services specialists, and complete-count committees.

A 35mm slide show also was produced for use by regional and district office personnel who made hundreds of presentations to community groups.

Information Kits

The basic vehicle for regular mass-media contacts was the information kit or press kit, occasionally distributed at press conferences, but more frequently via the mails. The materials for the kits were tailored to the special needs and interests of the different print and broadcast media.

CPO prepared kits for daily and weekly newspapers (10,500), television stations (1,200), radio stations (7,000), national magazines (44,000), corporate executive officers (1,300), census statistical area key persons (1,000), plus Members of Congress (535) and other types of organizations. The newspaper, television, and radio kits were produced in versions for general

CENSUS

"LIVING MAP"

Public Service Announcements available in :60, :30, :20, :10 lengths on 16mm film

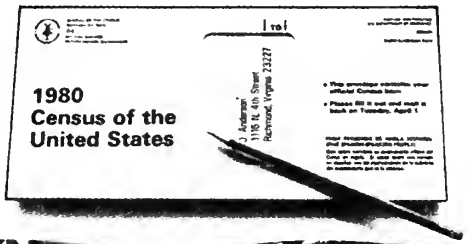

RUN THROUGH APRIL 1, 1980, ONLY.

60 SECONDS

SOLOIST: *In eighty million mailboxes 'cross the U.S.A.*
CHORUS: *The Census is a' comin' to help us*

plan the way. To show us where we're going, so that we can understand...

What's needed for the future -- the future of our land. Can we count on you?

MALE: You can count on me.

CHORUS: *Can we count on you?*

TIPPI HEDREN: You can count on me.

KIRK DOUGLAS: Help your community get equal government representation and help show where

funds are needed for jobs, schools, health care, and more. Answer the 1980 Census.

PATRICK O'NEAL: And all your answers are kept confidential by law.

CHORUS: *Can we count on you?*

YOUNG MALE: You can count on me.

CHORUS: *Can we count on you?*

MICKEY MOUSE: You can count on me.

STEVE ALLEN, JAYNE MEADOWS, & CHORUS: *And together we will see each other through--*

Answer the Census, we're counting on you.

Answer the Census. We're counting on you.

A Public Service Campaign of The Advertising Council.

Volunteer Agency: Ogilvy & Mather, Inc.
Volunteer Coordinator: Norman Sylvester, Pepsi Cola Company
CNBC-0160/0130/0230/0120/0110/0120

Ad Council

180

audiences and minority groups—Black, Hispanic, Native American, and Asian and Pacific Islander.

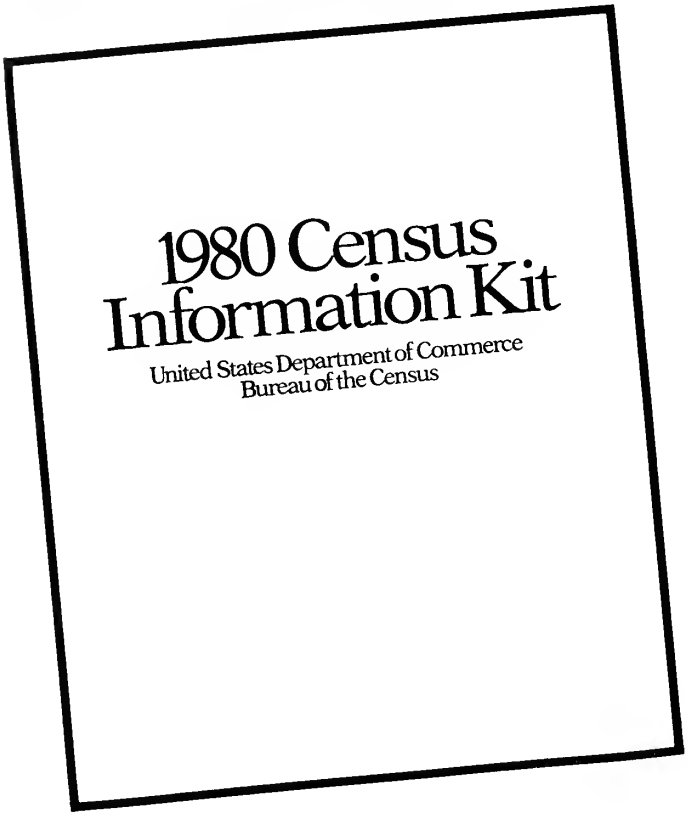

Three major press conferences were held prior to Census Day. At the first, in Washington in the summer of 1979, the overall census plans were announced. At two held in January 1980 in New York and Los Angeles, in concert with the Ad Council, the media were briefed on the advertising campaign and materials and the Council's role. The timing of these two conferences was critical to alert the media to the materials that would be coming to them for public-service use and to lay the groundwork for future stories.

Census Cartoons

In October 1979, CPO began to contact, through the Newspaper Comics Council, 75 of the top cartoonists in the country to request them to develop editorial cartoons or cartoon strips. At least half of the artists contacted complied with the request, many employing either humor or irony in calling attention to the census.

FIELD PROMOTION

Field Public Information Network

Public information coordinators and census information technicians—A staff of 40—12 public information coordinators (PIC's) and 28 census information technicians (CIT's)—worked with the regional office and district office staffs to coordinate field public relations and information activities during the 1980 census.[7]

A special unit in the Bureau's Field Division (headed by a census information coordinator) worked in liaison with the CPO, the PIO, and the regional offices, and had overall responsibility for the work of the PIC's and CIT's. The CPO established a similar position (called CPO Field Operations Supervisor) to coordinate the development of an operational plan, produce and disseminate materials, and design a training program for PIC's and CIT's.

One PIC was assigned to each of the Bureau's 12 regional census centers and worked under the direct supervision of the regional census manager. The CIT's, who were supervised by

[7]In 1970 there were nine public information officers in the field; and in 1960, there were only three.

the PIC's, were deployed in census district offices, generally in key urban areas. They had responsibility for public information activities for several district offices at once.

PIC's and CIT's, all of whom had previous public-relations or media experience, were hired between July and December 1979. PIC's were given a 5-day training workshop at Bureau headquarters in early September 1979. CIT's received preliminary instruction in the regional census centers and then were given a 3-day training session at headquarters in late November 1979, or in late January 1980, for those hired last.

The main responsibilities of the PIC's were:

- Supervise the activities of the CIT's.
- Serve as public relations advisers to the regional directors, regional census managers, and their top staff, or to the Director or other headquarters officials visiting the regions. The PIC's were to give advice on potential publicity pitfalls or benefits from particular Census Bureau actions, and also brief regional and district office staff members before they appeared on radio or television talk shows or gave newspaper or magazine interviews.
- Coordinate press relations and other information activities with the Community Services Program coordinator and data user services officer (now information services specialist) in the regional office and assist the community services specialists in dealings with the minority news media.

Duties assigned to both PIC's and CIT's were:

- Maintain personal contact with key reporters, editors, news directors, etc., of major news media throughout the region. Suggest story, feature, or program ideas, provide background information on the census, recommend Bureau officials and others in the community for interviews and talk show appearances. Obtain editorial support from, answer queries from, and arrange for interviews or press conferences with, the news media.
- Prepare press releases, speeches, and other written materials for use in the 1980 census promotion activities. There were times when special press releases, spot announcements for radio and television, speeches, and copy for brochures or posters had to be prepared in the field. The PIC's and CIT's provided this service at the request of either the regional census center staff or the district office managers. In most cases, model press releases, speeches, or brochure copy were provided by the Census Promotion Office for use by the PIC's, CIT's, and district office managers, who then localized the promotional messages.
- Work closely with other public information/public relations officials in the region, such as those employed by State and local governments, organizations with an interest in supporting the census, and major employers.
- Appear on radio and television to talk about the census when other Bureau officials were not available.
- Assist in publicizing the Bureau's recruiting needs.
- Prepare regular activity reports on public information activities throughout the region for use by regional office and headquarters staff.
- Serve as an adviser and coordinator to the complete-count committees, National Football League (NFL) project, and other publicity programs. In the NFL project, 63 players were recruited and trained as Census Bureau public affairs representatives to join PIC's, CIT's and Community Services Specialists in public appearances in areas where the individual players were well known and where they would have greatest impact in encouraging support for the census.

In addition to generating positive publicity about the census, the PIC's, CIT's, and regional and district office staffs had to deal with the usual public-relations problems that could arise in such a massive field operation: allegations of mismanagement by disgruntled district office workers, complaints about the use of

District office managers—Most district office managers spent a great deal of time in the public spotlight because news reporters focused on them as the chief Bureau spokespersons in their local areas. In many cases, the PIC's and CIT's maintained close contact with the district managers and coordinated their promotion activities. Since many of the managers had had little experience with the media, the PIC's and CIT's offered valuable advice on ways to deal with the press.

CPO provided a package of promotional materials to each district manager. Included were media mailing labels, press releases, public service announcements for radio and television, and other suggested announcements and letters. Many managers held "open houses" in February 1980 for the press, local officials, complete-count committee members, and civic leaders. (For more on the role of the district office managers, see ch. 5.)

Community Services Specialists

The community services specialists (CSS's) developed and maintained communication with minority groups and influential individuals at the regional, State, and local levels. Contacts were made with local leaders, minority news media, and institutions that could influence persons who might not ordinarily be counted in the census.

The 200 specialists sought to obtain the trust and active cooperation of such groups and individuals and to convince them of the confidentiality of the information they furnished. The CSS's also endeavored to make them aware of the advantages of being included in the census, to inform them about Bureau data useful to them and explain their uses, and to enlist their help in recruiting census district office and field staff.

Complete-Count Committees

At the invitation of the Census Bureau, more than 4,000 complete-count committees were organized by local jurisdictions throughout the country in an effort to generate local promotion of the census. The 1980 census complete-count committee program was built on the experience in the 1970 census with a "correct count" committee in Detroit, MI. The purpose of the Detroit committee was to educate citizens on the importance and benefits to their community of having as complete a count as possible, and it is believed that the committee was effective in generating public support.

The complete-count committee concept was tried in 1980 census planning, and groups were formed in the tests in Camden, NJ, and Oakland, CA, and in the dress rehearsals in Richmond, VA, and lower Manhattan, NY. These experiences supported the belief that complete-count committees should be organized for the 1980 census, and that to be effective, the committees should be representative of the various segments of the communities and become functional at least several months prior to Census Day.

Once the decision was made to implement the complete-count committee program, intensive planning was undertaken in 1978 and 1979. One major decision concerned the scope of Bureau involvement in the program. Given a limited budget, the Bureau decided to restrict its staff support and the amount of material aid it could give the committees. The staffing structure consisted of 1 coordinator at headquarters and 23 complete-count committee technicians, or an average of 2 per region, under Field Division supervision.

Three levels of support were developed. Cities with 500,000 or more people were to receive direct technical assistance. One regional technician was assigned as liaison to each of these large cities. Although cities in the 100,000 to 500,000 population range and counties with 250,000 or more people were not to receive direct technical support, technicians were to telephone each of these governments to explain further the program and answer any questions throughout the census period. No personal or telephone contacts were to be initiated by Bureau personnel with the other entities, but any inquiries received by the regional census centers (RCC's) were answered.

In practice, the technicians made every effort to be responsive to all localities, regardless of size. These people, many of whom simultaneously held other jobs in the RCC's, were hired in the period from August to November 1979, and were given a 4-day training session in Alexandria, VA, in November.

With regard to providing materials to the complete-count committees, the Bureau tried to confine its support to giving them a kit of reproducible promotion materials, and depended on the localities to find their own resources to fund the publicity efforts. Wherever possible the Bureau did provide quantities of posters, flyers, etc., but its ability to do so was limited.

In October and November 1979, each of some 39,000 localities (or revenue-sharing entities) was mailed a background package. This package contained: (1) an introductory letter from the Director explaining the complete-count committee concept, the timing and availability of promotional materials, and the degree of support that the Bureau would provide; (2) a set of guidelines further explaining the purpose and functions of the committees; (3) a letter from the Labor Department explaining that CETA (Comprehensive Education and Training Act) workers could be used in the program; (4) a sample press release for use when a committee was established; (5) a sample proclamation for use by a community's elected council (or similar body) urging public support of the census; and (6) reproducible proofs of a census poster, flyer, slogans, and logos. The highest elected officials in the localities were asked to indicate on an enclosed response form whether they intended to form a committee. These forms were returned to Jeffersonville, IN, and each regional census center was subsequently informed of the type and quantity of responses received.

By the end of December 1979, responses to the mailout indicated that about 2,600 committees had been or were being formed, and this number increased to 3,600 by the end of January 1980 and to 4,000 by the middle of March, 2 weeks prior to Census Day. The areas covered ranged across the entire spectrum of population size, from the largest cities to the smallest incorporated places.

A second informational package was mailed to the participating localities in February 1980. This package contained information for contacting the technicians, further reproducible materials, and other background information. The work of the complete-count committees involved two phases, preCensus Day and post-Census Day. Prior to April 1, effort was directed at getting people to respond to the census by mailing back the questionnaires they were to receive on March 28. After Census Day, the emphasis was on informing the public that it was not too late to mail in their questionnaires if they had not done so and on publicizing the "Were You Counted?" theme.

Following are some of the pre-Census Day activities undertaken by complete-count committees.[8]

- Mayoral or council proclamations urging support for the census.
- Distribution of materials to selected groups asking support for the census, e.g., major business employees and clients, city or county employees, welfare recipients, social service organizations, churches, teachers, etc.
- Arrangements with local media to carry census messages, some of which were tailored by the complete-count committees to the localities.
- Imprinting of census slogans on commercial products.
- Workshops to familiarize key community leaders with the census operations and questionnaires.
- Envelope stuffers in utility bills, welfare checks, city employee checks, etc.
- Panel discussions at local high schools.
- Placement of census posters in business establishments and widespread distribution of census promotional flyers, sometimes using CETA workers.
- Creation of local "celebrity" PSA's.
- Parades, contests, picnics, and "fun" runs.

"Were You Counted?" Campaign

The CIT's and district managers were responsible for obtaining support from local newspapers in carrying "Were You Counted?" advertisements. These were available in 33 languages and were run, generally, after the completion of followup enumeration. The purpose of the "Were You Counted?" campaign was to give those persons who believed they had not yet been counted in the census an opportunity to be counted. The form, reproducible copies of which were provided to the newspapers, asked for the name and address of the householder and for basic characteristics (name, relationship, sex, race, age, marital status, and Spanish-origin) of household members who might have been missed.

[8]For more detail see Christine Williams, "History of the Complete Count Committee Program."

The householders were to cut out the form, fill it in, and mail it to the local census office, the address for which was displayed on the form. When "Were You Counted?" forms were received in the district office, clerks checked to see whether the persons named had already been counted, and if not, they were added to the census. (See ch. 5 for more information.)

Community services representatives distributed copies of the "Were You Counted?" forms to community organizations and quantities were also made available for distribution by local governments and complete-count committees.

RESULTS AND EVALUATION

The promotion campaign helped make the 1980 census a major news story for all media. In addition, the PSA's prepared by the Ad Council and the Bureau were widely used and added another dimension to the efforts to gain public cooperation.

One goal of the promotion campaign was to encourage respondents to mail back their questionnaires to the census district offices, thus reducing costly field followup activities. The target was an 80-percent mail return, and, as mentioned in chapter 1, the actual rate was 83.3 percent.

The Ad Council commissioned two independent evaluations of the results of the 1980 advertising campaign. The first, "An Evaluation of the Public Service Advertising for the 1980 Census," by Vitt Media International, Inc., was issued in December 1980. This study placed the value of the donated advertising time and space at nearly $38 million.

The following shows the advertising dollar values received from various media ("spot" segments are those run on an individual station as opposed to an entire network).

Medium	Value (dollars)
Total	*37,990,000*
Spot radio	15,700,000
Network television	8,095,000
Spot television	6,100,000
Spanish-language media	3,700,000
Transit companies	1,100,000
Consumer magazines	1,055,000
Outdoor posters	550,000
Daily newspapers	520,000
Black media	500,000
Weekly newspapers	410,000
Network radio	160,000
Trade magazines	100,000

The Vitt report estimated that this advertising resulted in an average of 100 exposures to census messages for each person in the United States from one media source or another between January and June 1980. For that 6-month period, the value of the census campaign was exceeded by only 2 of the Nation's 10 largest brand-name advertisers.

The Vitt report also pointed to the impact of "unmeasurable" media exposure or the "plus factor." The "plus factor" consisted of exposure from newscasts, interviews, and special programs on radio and television; news stories, articles, and features in newspapers and magazines; support in service-organization and trade publications, bulletin boards, employee publications, and paycheck and billing inserts; etc.

Three efforts were undertaken to evaluate the impact of this "unmeasurable" exposure in the minority media: (1) a study by Media Associates, a firm of minority media specialists, covered 77 Black and Hispanic radio stations in 18 selected cities, (2) a CPO review of articles and editorials that appeared in 19 Black weeklies, and (3) CPO telephone interviews of radio, television, and print media directed to Hispanic audiences.

One finding of the Media Associates study was that practically every radio station surveyed ran census-related PSA's, about half aired talk shows or news stories, and smaller percentages carried guest interviews, disc jockey comments, call-in shows, or editorials. The survey of Black weeklies found an impressive level of support, both in the numbers of census stories, editorials, and cartoons, and in their size and placement. The telephone interviews of Hispanic media also found extensive support for the census.[9]

As part of its regular 1980 census research and evaluation program, the Census Bureau designed a "Knowledge, Attitude, and Practices (KAP)" study and an "Exposure" study. The work of designing and selecting the samples and conducting interviews was contracted out to private research companies in both cases; processing and analysis for the KAP study was handled by Census Bureau staff, and for the "Exposure" study, by the outside contractor.

The KAP study sought to assess the effects of the promotion campaign on knowledge of basic facts about, and attitudes toward the census, and on practices—whether householders returned their questionnaires by mail, as requested. The study reached conclusions about the effectiveness of the promotion program in meeting its four major goals:[10]

To notify the American people that a census was to be taken—The campaign effectively made people aware that the census was coming. Both awareness of the census and reported exposure to the campaign increased significantly over its course in every population subgroup examined. Although the campaign effectively penetrated all types of households, however, it still appears that White and high-income households were more aware of the census as Census Day approached than non-White and low-income households. Levels of exposure in low-income households did not match those achieved in high-income households within any racial/ethnic group. Low-income Black households were least likely to be reached by the campaign, although there were large increases in awareness and exposure during the promotion campaign even for this group.

To inform the people how and why they were to be counted—Knowledge of the basic facts of census-taking and of the purposes and uses of the census increased significantly over the course of the promotion campaign among low-income non-Whites, who were the least informed at the start of the campaign. There were no such gains in White or high-income households. Yet, even after substantial campaign activity, knowledge of some of the most basic issues of census-taking was still quite limited, and despite their gains, low-income and

[9]For more detail see the Fitzhugh report, pp. 90-114. The Vitt and Media Associates reports are reproduced in the Census Bureau's 1980 Census Preliminary Results Memorandum No. 17, "Vitt Media International Inc., and Media Associates, Inc., Reports on the 1980 Census Publicity Campaign," Sept. 9, 1981.

[10]Preliminary Evaluation Results Memorandum No. 31. "Evaluating the Public Information Campaign for the 1980 Census—Results of the KAP Survey," Jeffrey C. Moore, September 1982.

non-White respondents tended to be less knowledgeable than their high-income and White counterparts.

To foster favorable attitudes toward the census—There is little evidence that the promotion campaign had an important impact on public attitudes toward the census. Attitudes were highly favorable from the outset of the campaign among all segments of the population, and remained largely unchanged over the course of the campaign.

To elicit public cooperation in the census—The promotion campaign did appear to have increased mail response, primarily among the low-income and non-White households which were the campaign's key targets. Mail response seemed to have been influenced both by the sheer amount of exposure to the campaign, and by the campaign's ability to instruct people regarding the purpose of the census.

For a discussion of the design and methodology of the KAP study and a facsimile of the survey questionnaire, see Ch. 9, "Research, Evaluation, and Experimentation Program."

Contents

Chapter 5. Field Enumeration

(Page numbers here omit the chapter prefix, 5-, which appears as part of the number of individual pages and appendixes. Each chapter is paginated separately for convenience of issue)

	Page
ACRONYMS USED IN CENSUS FIELD OPERATIONS	3
INTRODUCTION	5
ORGANIZATION	5
LOGISTICS	6
Space	6
Field Safety and Security	9
Supplies, Furniture, and Equipment	10
Communications	11
PERSONNEL	12
Recruiting System	12
Qualifications	13
Selection Aids and Procedures	13
Appointing and Releasing Employees	15
Pay	16
TRAINING	17
Introduction	17
Administrative Training	17
Office Training	18
Field Training	18
MAIL CENSUS PROCEDURES	18
Introduction	18
Questionnaire Assistance	19
Receiving the Mail Returns	19
Mail Return Rates	24
Followup 1	24
Editing	27
Telephone Followup	28
Merge	28
Followup 2	28
''Last Resort'' Information	31
Variations from Mail Procedures	31
CONVENTIONAL PROCEDURES	31
Introduction	31
The Enumerator's Work	32
Post-Enumeration Post Office Check (PEPOC)	33
Quality and Coverage Control	33
Followup	34

OPERATIONS COMMON TO ALL DISTRICT OFFICES 35
Office and Field Separations 35
Population and Housing Counts 35
The Local Review Program 36
Closing the Offices 38

SPECIAL ENUMERATION PROCEDURES 39
Introduction 39
Census Procedures for Special Places 43
Self-Enumerating Places 45
Usual Home Elsewhere (UHE) Program 48
"Were You Counted?" Program 49
Procedures for Special Groups or Geographic Areas 49

APPENDIXES
5A. District Offices by Regional Office and Census Procedure 55
5B. List of Public- and Field-Use Forms for the 50 States and the District of Columbia 61
5C. Facsimiles of Selected Field-Use Forms 77
5D. Staffing Calendars 101

Acronyms Used in Census Field Operations

ACR	advance census report
ADOM	assistant district office manager
ANRC	Alaska Native regional corporation
ANV	Alaska Native village
AOS	administrative operations supervisor
APOC	advance post office check
AR	address register
ARCM	assistant regional census manager
ARDC	assistant regional director for census
BNA	block numbering area
C	conventional
CIT	census information technician
CSP	Community Services Program
CSR	community services representatives
CSS	community services specialist
CT	centralized
CV	crews-of-vessels
D or DT	decentralized
DO	district office
DOD	Department of Defense
DOM	district office manager
DOT	Department of Transportation
EA	enumerator assignment
ED	enumeration district
FAR	followup address register
FAX	facsimile transceiver copier
FE	failed edit
FLSA	Fair Labor Standards Act
FOA	field operations assistant
FOSDIC	film optical sensing device for input to computers
FOS	field operations supervisor
FTS	Federal Telecommunications System
GPO	Government Printing Office
GPS	geographic planning specialist
GQ	group quarters
GSA	General Services Administration
HU	housing unit
ICR	individual census report
IN	institutional group quarters
IR	Indian reservation
ISA	Indian subreservation area
JVPO	Jeffersonville, IN, processing office
LMR	late mail return
LNPO	Laguna Niguel, CA, processing office
LRMF	local review mailing file
MAR	master address register
MCR	military census report
MRF	master reference file
NCR	no carbon required
NON	noninstitutional group quarters
NOPO	New Orleans, LA, processing office
OOA	office operations assistant
OOS	office operations supervisor
ORS	Office of Revenue Sharing
OSC	office services clerk
OTR	overseas traveler's report
PEPOC	post-enumeration post office check
PIC	public information coordinator
PV	personal visit
QC	quality control
RCC	regional census center
RCM	regional census manager (title changed to ARDC)
RO	regional office
SAC	senior administrative clerk
SAVS	Selection Aid Validation Study
SCR	shipboard census report
SOC	senior office clerk
SPOS	special-place operations supervisor
SPRT	special-place regional technician
SPSOC	special-place senior office clerk
SSN	social security number
TAR	tape address register
TTL	tribal trust land
UHE	usual home elsewhere
USPS	United States Postal Service
WATS	Wide Area Telecommunications System
WHUHE	whole household usual home elsewhere

Chapter 5. Field Enumeration

INTRODUCTION

Basic census procedures involved the use of the mailout/mailback method for areas of the country containing 95.5 percent of the population and the conventional method (i.e., going from door to door) for the remainder of the country. (See map in ch. 1.) These procedures were essentially the same as those used in 1970 except that then the mailout/mailback method was used in areas containing only 60 percent of the population. The decision to extend the mail census area was based in part on the results of the Mail Extension Test (an experimental program conducted as part of the 1970 census) and on the high mail-return rate for occupied housing units in 1970—85.6 percent.

In the mail census, the U.S. Postal Service (USPS) delivered addressed census questionnaires (either a short or a long form) to over 80 million housing units at the end of March 1980. Instructions in the questionnaire mailing packages asked householders to fill out their forms on April 1 and mail them back in the enclosed return envelopes to the local census district offices (DO's). In general, census enumerators made personal visits only to housing units for which the district offices had not received returns by April 16 (see p. 24) or for which additional information was required that could not be obtained by telephone.

In the conventional method, the USPS delivered unaddressed short-form questionnaires to housing units 4 days prior to Census Day, but householders were instructed to fill out their forms and hold them until an enumerator visited. Beginning on March 31, the enumerators collected completed short forms and/or helped householders finish them at the time of the visit, and filled long forms at designated housing units.

Thus, there was mail delivery of questionnaires in both the mail and conventional[1] areas, but in the former, the questionnaires were for specific addresses taken from the Bureau's master address list. There were no precensus address lists for conventional areas.

Group quarters were visited everywhere (see "Special Enumeration Procedures," p.39), whether in mail areas or conventional areas.

The data-collection effort entailed establishing and staffing local census offices, receiving and accounting for mailed-back or personally collected questionnaires, obtaining missing data, performing certain basic processing and coverage-improvement operations (including assisting local officials in making certain that the census was complete), shipping the gathered census materials to processing centers for further refinement, and compiling and announcing preliminary counts of population and housing units.

ORGANIZATION

The field enumeration or data collection was the responsibility of the Bureau's Field Division at headquarters. Regional census centers (RCC's) were set up in each of the Bureau's 12 permanent regional office cities (Atlanta, GA, Boston, MA, Charlotte, NC, Chicago, IL, Dallas, TX, Denver, CO, Detroit, MI, Kansas City, KS, Los Angeles, CA, New York, NY, Philadelphia, PA, and Seattle, WA) for the duration of the census. During this period, there were two regional boundary systems—one for ongoing Bureau activities (current surveys, informational services, etc.) that had been operational before the 1980 census and one for decennial activities only. The decennial boundary system (see ch. 1, app. 1F) was in use from late 1977 to 1981.

The major difference between the two sets of boundaries was that the decennial system generally included entire States under one regional office area rather than splitting a State between two regions; the exceptions were New York and New Jersey.

In addition, there were 409 temporary district offices (DO's) in the 50 States and the District of Columbia, 3 suboffices (1 to enumerate the Navajo Indian Reservation and 2 in Alaska), 8 offices in Puerto Rico (supervised by an area office similar to an RCC), and 1 (with some suboffices) for each of the outlying areas.[2] There were four types of DO's. In mail census areas, DO's were either "centralized" or "decentralized." The 87 centralized offices served substantially inner-city, hard-to-enumerate areas, while the 286 decentralized offices were located primarily in smaller cities and in suburban and rural areas. There were 24 offices in areas of the country where the "conventional" method of enumeration was used. In addition, there were 12 "two-procedure" offices where both conventional and decentralized procedures were employed. (The procedures are described in more detail beginning on p.18. Use of the terms "centralized" and "decentralized" was a carryover from the 1970 census, when operational differences between the two were far greater than in 1980.)

Preliminary DO boundaries were drawn in late 1976 and early 1977 by the Field and Geography Divisions at headquarters and were sent to the regional offices for review. By September 1977, the regional offices identified areas designated by headquarters for the conventional method where the mail procedure should be used instead, and vice versa, and any differences between headquarters and regional proposals were reconciled. Final plans

[1]The conventional method is often referred to as "the way censuses have always been taken" or as the "traditional" method, but the method actually dates back only to 1960. Most censuses prior to that time involved enumerators' going door to door to complete the enumeration *without* an advance delivery of questionnaires by mail carriers.

[2]The enumeration in Puerto Rico and the outlying areas is discussed in ch. 11.

were reviewed again at headquarters, and the boundaries were essentially set by early 1978. The boundaries were delineated so that, with one exception, DO's did not cross State boundaries.[3] A county was not split unless it had a larger population than could be enumerated by one DO. Also, the implications of census methodology for the publicity effort were considered: wherever possible, an effort was made to have only one procedure (mail or conventional) in a State or media area.

An optimum size for each type of DO was set in terms of housing units— centralized, 134,000; decentralized, 264,000; and conventional, 119,000. Translated into population, this meant centralized, 315,000 inhabitants, with a range of 280,000 to 380,000; decentralized 670,000, with a range of 475,000 to 825,000; and conventional 325,000, with a range of 250,000 to 400,000. The following table shows the actual average office size by type of office and the population covered by each office type.

Table 1. Average Office Size by Type and Population

Type of office	Number	1980 population	
		Total	Average per office
Total	409	226,545,805	553,902
Centralized	87	27,702,735	318,422
Decentralized	286	186,700,241	652,798
Conventional	24	7,326,360	305,265
Two-procedure	12	4,816,469	401,372
Decentralized	(X)	2,397,280	(X)
Conventional	(X)	2,419,189	(X)

(X) Not applicable.

Each RCC had responsibility for directing operations for 27 to 42 DO's. (See app. 5A for list of DO's by regional office.) RCC personnel trained key DO supervisors, monitored costs and progress of operations in the DO's, processed RCC and DO payrolls, and, in general, had overall responsibility for assuring the timely completion of the field work.

The regional census manager (RCM; title later changed to assistant regional director for census [ARDC]) was responsible for the entire decennial census within his region and reported to the regional director. In carrying out management responsibilities, the RCM was assisted by two assistant regional census managers (ARCM's)—one for technical and procedural operations and one for administrative matters—and by a regional recruiting coordinator, geographic planning specialist (GPS), community services program (CSP) coordinator, and public information coordinator (PIC). (See fig. 1.)

Regional technicians were the RCC's liaisons with the DO's, relaying instructions from the RCC and serving as advisors to the office managers, but they had no line authority in the DO's.

The organization of the DO's varied by type of office—centralized, decentralized, and conventional. Each office was headed by a district office manager (DOM) who reported to the RCM and who had overall responsibility for running the DO. (Fig. 2 shows the organizational structure of each type of office.) The DOM in centralized offices was aided by an assistant district office manager (ADOM) for recruiting job candidates; an equivalent position in decentralized and conventional offices was the field operations assistant (FOA) for employment.

Field operations, which involved such enumerator work as updating address lists and following up on nonresponse cases, were headed by a field operations supervisor (FOS) in each type of office. As can be seen from the organization charts, the FOS was assisted by FOA's who supervised crew leaders; the crew leaders in turn supervised the enumerators. Clerical activities relating to field operations, such as assignment preparation and control, were supervised by one or two senior office clerks (SOC's).

Office operations, such as check-in and edit of filled questionnaires, were headed by an office operations supervisor (OOS) in centralized and decentralized offices, and by an office operations assistant (OOA) in conventional offices. In centralized and decentralized offices, an OOA was authorized for the peak of operations as an aide to the OOS.

In each centralized and decentralized office, there was a separate special-place section headed by a special-place operations supervisor (SPOS); under the SPOS were crew leaders and enumerators, who handled the field operations, and an SOC and clerks, who were responsible for preparatory work and the processing of returned questionnaires. In the conventional offices, special-place operations were under the general control of the FOS. The regular crew leaders and enumerators completed the enumeration of special places (unless the workload required a separate staff), and an SOC and clerks for special places processed the returned questionnaires for individuals in group quarters. (Special places are defined and discussed on pp. 93 ff.)

Payroll and personnel matters came under the supervision of an administrative operations supervisor (AOS) in centralized and decentralized offices and a senior administrative clerk (SAC) in conventional offices. In centralized and decentralized offices, there was an office services clerk (OSC) in charge of supplies and, in each type of office, clerks were authorized to help process the payroll forms.

LOGISTICS

Space

The biggest departure in the area of space acquisition from the 1970 census was that the Census Bureau sought and obtained a delegation of authority from the General Services Administration (GSA) to lease space for its temporary RCC's and DO's. This authority was sought, in part, to lower the cost of leasing; it was believed that at least 15 percent of the estimated leasing cost could be saved by not having to pay GSA's charges for negotiating and administering the leases, and that having the regional office staff negotiate the leases would assure that the Bureau's special requirements were fulfilled. In addition, costs were expected to be much higher than in 1970 for several reasons: (1) The Bureau would require 2.4 times as much space as in 1970—4 million square feet, as opposed to 1.6 million square feet; (2) the DO's would be open, on the average, 1.7 times longer than in 1970—7-9 months, compared to 4-6 months (cf. p. 91); and (3) there would be no free GSA space available, because under new budgeting rules, GSA had to charge agencies for use of Federal property.

[3]One DO crossed State lines to include southern Delaware and part of the eastern shore of Maryland; the subdistrict office in Chinle, AZ, covered the Navajo Indian Reservation, which extended into Utah and New Mexico.

Figure 1. Regional Census Center Organization Structure

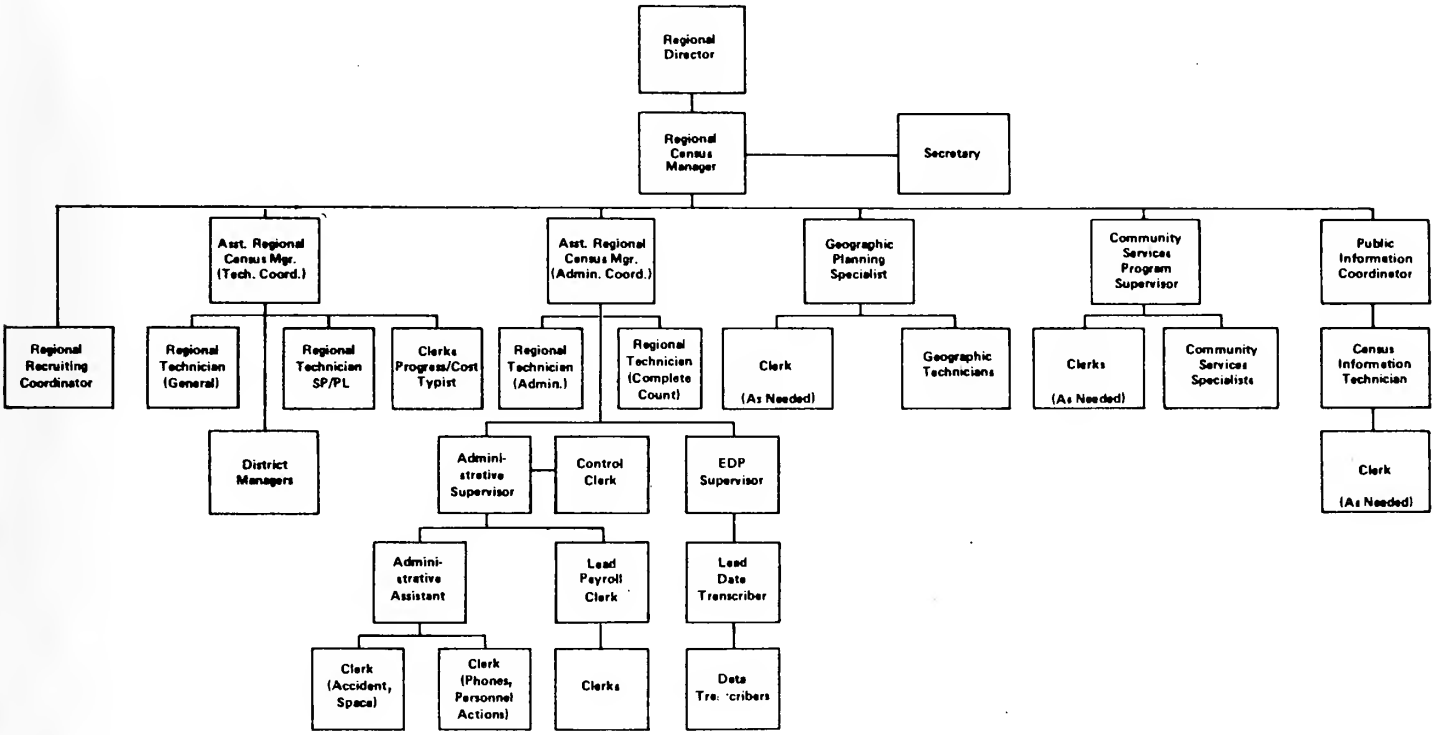

Figure 2. District Office Organization Structure

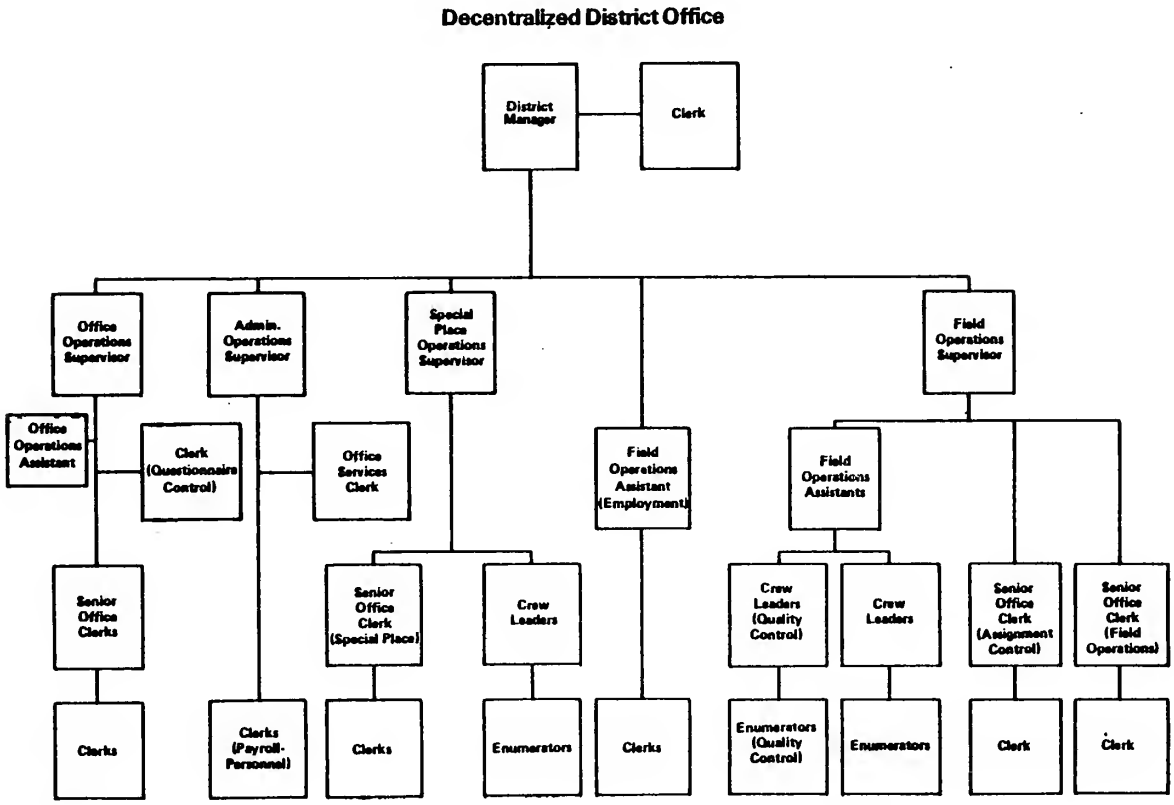

Figure 2. District Office Organization Structure—Con.

Centralized District Office

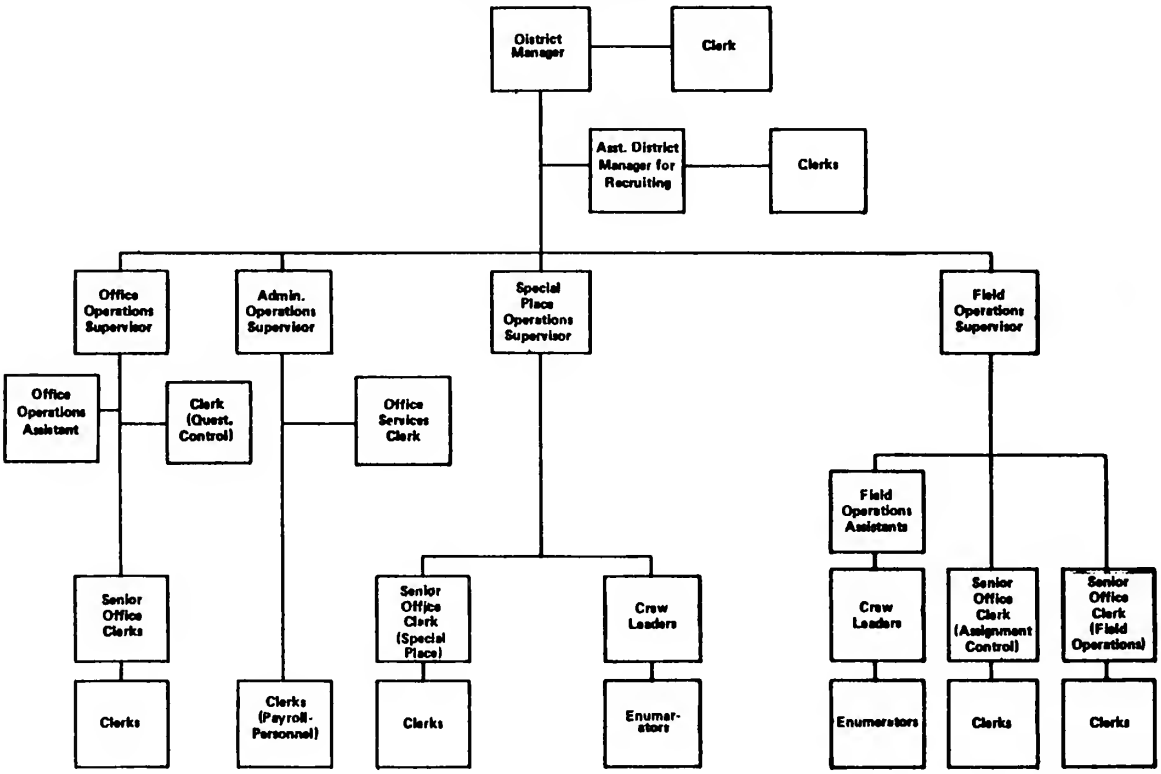

Conventional District Office

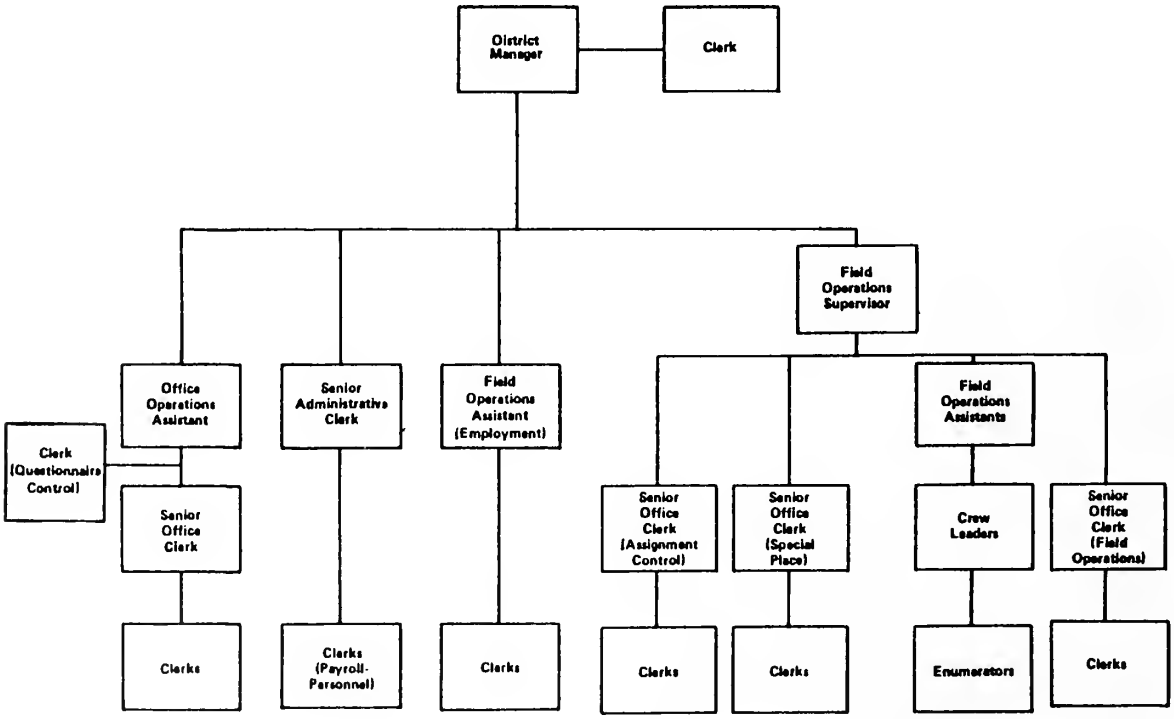

In all, 412 DO leases were negotiated for about 4 million square feet, at a cost of $23 million.[4] About 75 percent of the DO leases began on or slightly before December 17, 1979, so that the shipment of supplies to the offices could begin on a flow basis. Eight offices were leased after the scheduled opening dates (Jan. 2, 1980, for centralized and decentralized offices, and Jan. 28, 1980, for conventional), but four of them opened within a week. The other four, delayed by late leases and/or space not being ready for occupancy, and their lag time, were as follows: Dearborn, MI (2401), 4 weeks; Topeka, KS (2602), 3 1/2 weeks; Northeast Central Chicago, IL (2546), 2 1/2 weeks; and Beckley, WV (2826), 2 weeks. Closing dates are discussed on page 38, and the dates for the individual offices appear in appendix 5A.

The Bureau contracted with a private consultant to train about 135 of its regional office personnel who would be responsible for lease acquisition, administration, and management. These regional leasing technicians were supported by headquarters staff who advised on problems and reviewed the negotiated leases for compliance with Federal regulations. The leases were signed in most cases by either the regional director, RCM, or ARCM for administration.

The average RCC had about 10,200 square feet. In December 1979, the RCC's were instructed to acquire additional space sufficient to operate a manual payroll system in case the planned automated system could not be instituted. This space (an average 6,800 square feet per RCC) was never used for manual payrolling, since the computerized system performed well; but it was utilized for many other operations, including resupply of the DO's when that function was moved to the RCC's.

Total space for the 12 RCC's was just over 200,000 square feet, at a cost of $3.2 million. These leases began in February or March 1979 and ran until the end of March 1981.

DO space requirements were based on the estimated housing-unit workload and the resulting estimate for the size of the clerical workforce, who would occupy a large part of the office space at the peak of operations. It was originally planned to allocate 60 square feet per clerk, but due to budget constraints this was done only for centralized offices, and in all other offices the allocation was 45 square feet. Thus, the average centralized office would have about 13,000 square feet; decentralized, 9,000 (except for 24 "rural" decentralized offices, which averaged 7,500); two-procedure, 7,400; and conventional and suboffices, 6,400. (See fig. 3.)

Ideally, an office would be on the ground floor, with a loading dock, 75 percent or more open space, good lighting, and central location. If it was not on the ground floor, there should have been a freight elevator. A major consideration was the availability of adequate telephone lines, which required close coordination with the local telephone company.

The leasing by Bureau personnel was generally quite successful. The Bureau cut its costs about 20 percent by handling leasing itself. All but a handful of leases were in effect on a timely basis, and most of the space acquired, while not necessarily ideal, was adequate in terms of amount, layout, and amenities. Still, a number of DO's faced problems with access (lack of elevators or loading docks, being spread out on several floors, etc.), heating/cooling systems, and lease enforcement.

[4]There were 409 district offices and 3 suboffices. Of these locations, 372 were privately owned and 40 were Federal property.

Figure 3. District Office Layout

CONVENTIONAL

6400 sq. ft. (typical)

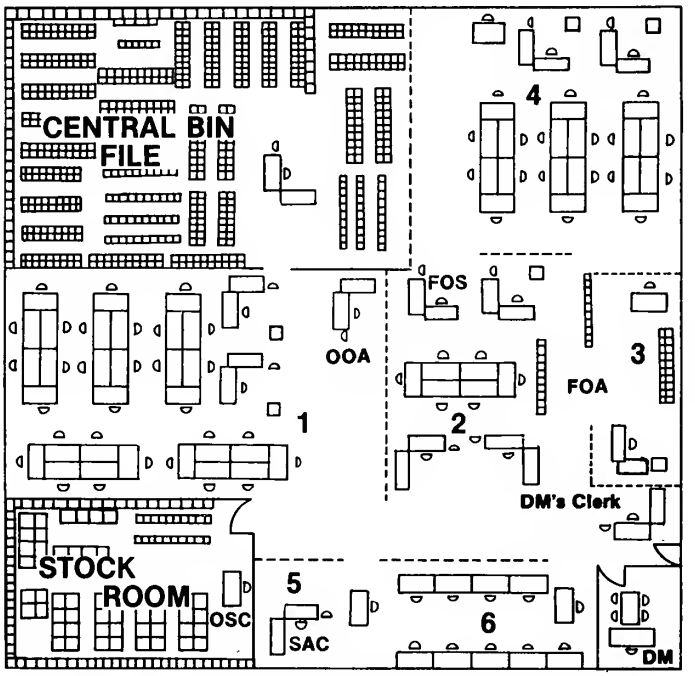

1 Office Operations - space for 1 00A, 4 SOC's and 24-45 clerks.
2 Field Operations - space for 1 FOS, 2 SOC's and 3 clerks.
3 FOA Employment - space for 1 FOA and 1 clerk.
4 Assignment Control - space for 1 SOC and 19 clerks..
5 Administrative Operations - space for 1 SAC and 2 clerks.
6 Testing & Training - space for 20 testing tables and 1 monitor.

Many decentralized offices faced overcrowding during the peak of activities. This was due to the underestimation of workloads, unplanned overlapping of operations, inability to staff both day and evening shifts, and cutting space allocations from 60 to 45 square feet per clerk. Some DO's alleviated the overcrowding by leasing extra space and a few had the use of extra space without charge. Some centralized offices faced the problem of location, and night shift hours had to be curtailed because employees did not consider the neighborhood safe after dark.

Field Safety and Security

Training sessions and procedures manuals stressed the need for safety practices to avoid injuries and fires as well as the importance of maintaining the confidentiality of the census data.

Areas where questionnaires and/or address registers were processed or stored were clearly identified as nonsmoking areas to reduce potential fire hazards, and as most offices were not equipped with sprinkler systems, fire extinguishers were positioned throughout.

Of special importance was the central bin file, a secured area where there was a separate cardboard bin for each enumeration district (ED). As questionnaires would be received by mail or turned in by crew leaders, clerks would sort them here. All questionnaires and address registers had to be checked in and out of this

area through the use of request forms (D-418, Central Bin File Control Card) and a D-417 ED Status Summary, on which each ED's material would be tracked through the various steps of office processing.

Access to the district office was controlled through the main entrance. Other doors either were permanently locked or set up for use as emergency exits only. All office and field employees and all visitors had to wear identification badges. There was a receptionist at the entrance who registered all visitors; any who were not sworn Bureau employees were always to be accompanied by someone from the district office staff, and they were not allowed to enter areas where confidential materials were stored or being processed, or where administrative and payroll records were secured. Access to such areas was restricted, even for district office employees.

To prevent break-ins, a number of the centralized district offices had guard service—some up to 24 hours a day; the GSA arranged this through private contractors.

Supplies, Furniture, and Equipment

Introduction—Logistics planners tried to anticipate every need the field offices would have for special materials such as questionnaires, procedural manuals, training guides, and field-use forms, as well as the numerous items required by any office—desks, chairs, paper, writing instruments, tape, etc. Quantities of items ordered were based on experience in the 1970 census and in the pretests and dress rehearsals for 1980, and on estimated housing unit and/or population workloads for 1980.

DO's received most of their supplies from one of the three processing centers (Jeffersonville, IN, New Orleans, LA, or Laguna Niguel, CA) but depended upon shipments from GSA regional centers for certain furniture, equipment, and general office supplies. The material from GSA included a limited number of metal desks for the district managers and key supervisors, chairs, metal bookcases and filing cabinets, storage cabinets, coat racks, and hand trucks. The general supplies included such items as pens and pencils, paper, tape, clips, tools, cardboard desks, and corrugated cartons.

The bulk of the materials were accumulated and shipped from the processing centers. Some of the major items purchased (and the quantities) included the following: cardboard desks (65,000) and cardboard tables (10,000); folding chairs (52,000); specially embossed 1980 census pencils (4 million); pocket-size pencil sharpeners (750,000); white correction dots for use in editing questionnaires (1.25 million sheets); red lectern-type three-ring binders for use by crew leaders in training enumerators (33,000); acetate holders for enumerator identification cards (750,000); plastic portfolios for enumerators (265,000); plastic bags for sorting questionnaires (6.7 million); and calculators for use in tallying population and housing counts and in other office operations (6,700).

The cardboard desks and tables, first used in the 1970 census, and the plastic enumerator portfolios were inexpensive alternatives to buying or renting metal or wooden desks or buying briefcases. When the DO's closed, they could be disposed of locally.

A major category of equipment was the filmstrip projectors, cassette tape players, and audiovisual filmstrips and cassette tapes the crew leaders used in training enumerators.

In addition to the supply items that had to be purchased, the Bureau had to write or design numerous manuals, training guides, and field-use forms, and have these printed. Most of the printing of forms, manuals, training guides, and training aids for the 1980 census field work was done by contractors, through the Government Printing Office (GPO). (Printing of the major data collection forms, the short- and long-form questionnaires, is discussed in ch. 3; facsimiles of all the data-collection forms appear in an appendix to this publication series. App. 5B describes the field-use form numbering system and lists individual operations manuals and training guides.)

Many of the field-use forms could not be developed until decisions were made on questionnaire content, enumeration procedures, sample size, and pay rates. More manuals and training guides had to be printed later and over a shorter time period than had been planned.

Kit assembly and shipment—Once the supplies were accumulated in the processing centers, those that were not set aside as bulk supply items (cardboard desks, folding chairs, etc.) were assembled into kits. Field Division specified what the components of each kit would be and the quantities of the particular kits that would be prepared. In all, some 1,570,300 kits were assembled: 651,000 crew leader and enumerator portfolios and supply kits, 916,000 training kits, and 3,300 general office supply kits.

As an example, the "followup 1 enumerator supply portfolios" for centralized and decentralized offices, of which 212,000 were prepared, contained the following items.

Number	Title	Quantity
D-1	Short-form questionnaire	25
D-2	Long-form questionnaire	10
D-26	Census appointment record	50
D-27	Introduction for Spanish-speaking respondents	10
D-31	Privacy Act notice	100
D-291	Employee pay voucher	3
D-291A	Employee record of travel expenses	3
	Envelope containing one sheet of correction dots	1
	Eraser, wedge-shaped slip-on	1
	Pencil, black lead, 1980 census	2

(Forms D-1, D-2, D-26, D-27, and D-31 are reproduced in the data-collection forms appendix. Forms D-291 and D-291A are reproduced in app. 5C.)

Assembly of a particular kit was scheduled to begin when sufficient quantities of all the components had been accumulated. But many items, particularly printed materials such as training guides and questionnaires, were received in the processing centers so late that assembly for some kits had to begin before all the components were gathered. Indeed, many kits were shipped incomplete to the DO's with "short" slips included to show which items were missing and would be sent later. Having to partially assemble or short-slip kits caused logistical problems for the processing centers and the DO's.

Kit assembly did not fully begin in all three processing centers until the first week in September 1979, about 3 months behind schedule. The last assembly work, mostly of training kits, was completed in early April 1980, about 3 months after the first offices officially opened.

Due to the large volume of materials needed in the DO's and the inability to assemble all kits by early January, two separate shipments were scheduled to each office. In the first shipment, intended to arrive before January 2 for centralized and decentralized offices and January 28 for conventional offices, were items needed before Census Day that were ready for shipment and, if there was space on the truck, any other kits that were ready. The processing centers began loading trucks on December 10, 1979, and notified the RCC's of the approximate arrival date at the DO's so that someone would be on hand to receive the shipment. It took the processing centers 4 weeks, working two shifts, to load the 400 trucks—each with loads of 30,000 to 40,000 pounds—for the various offices. These initial shipments to DO's were made via "dedicated" sealed trailers, since that provided about the same service and protection as "exclusive use" but at a substantially lower cost. A GSA specialist at each processing center provided the necessary transportation expertise.

Over 90 percent of the DO's received their initial shipments from the processing centers on time or no later than a week after opening. Due to a lack of coordination between the Bureau and GSA, the latter's shipments of general office furniture and supplies arrived much behind schedule, with about half of the mail census offices receiving their shipments 2 weeks or more late.

The second shipments were sent from the processing centers in late February, although many materials were shipped on a flow basis by the quickest means as they were prepared. These included maps, address registers, and training guides that were needed in the DO's as soon as possible.

Resupply—A central supply section was set up in the Jeffersonville processing office to handle requests for supplies of items that were never received by the DO's, or were depleted or lost. The DO's notified the RCC's of the types and quantities of materials needed and the RCC's in turn transferred the requests to the central supply section. Because of the high volume of resupply orders and the nonreceipt of many materials, the central supply section was not able to fill orders in a timely fashion. In late April 1980, the resupply function was delegated to the RCC's. Materials were shipped from Jeffersonville to the RCC's, where some of the space acquired for manual payrolling was used to store them. This action sped the distribution of materials on hand.

Problems—Supplying DO's was a massive and complex operation that involved a great deal of advance planning, procurement of many separate items, cooperation among various divisions at the Bureau, and dependence on other Government agencies, particularly GSA and GPO. Although, in the end, most DO's received the materials they needed, instances when materials did not arrive on time or in sufficient quantities posed serious problems for the offices in terms of morale and completing operations on schedule.

Some of the reasons for these difficulties have already been discussed: basic materials, particularly printed matter, did not arrive at the processing centers in time for kit assembly. Such vital tools as maps and address registers were held up by problems in their production operations (see ch. 3 for map production). The overall housing-unit workload of the census was underestimated, which meant that some materials were understocked. The unanticipated overlapping of DO operations (discussed under "Space") created a shortage of cardboard desks and tables. In some cases, where there were no shortages nationwide, there were spot shortages of particular items, and materials had to be transferred between offices.

The shortcomings were compounded by the lack of flexibility allowed the DO's. When supply items had to be purchased locally, the district managers had to pay for them out of pocket and get reimbursed later, as there was no petty cash fund. When items had to be printed, most DO's used local copying shops as there were no copiers in the offices. In some cases, the expense was paid out of pocket, and in other cases, the RCC's were billed directly.

Communications

Telephones—The DO telephone system provided enough lines for daily communication with the RCC, other DO's, and field staff; for assisting the public in filling out their questionnaires; and, in centralized offices only, for following up on households whose questionnaires failed the office edit.

As mentioned above, adequate telephone line capacity was a major criterion in selecting office space. The RCC's were responsible for initiating all orders for the installation and removal of telephones, and for reporting service problems to the telephone companies. The installations and connections went smoothly in most cases; however, there were a few late installations.

There were basically three types of telephone lines used in the 1980 census field offices: (1) FTS (Federal Telecommunications System), (2) local commercial lines, and (3) WATS (Wide Area Telecommunications Service) "800" long distance lines.

The FTS was a nationwide telecommunications system of lines available 24 hours a day for voice and data communication among Government agencies in more than 500 cities. Its purpose was to provide a dedicated Federal communication network that allowed long distance calls below commercial rates. The FTS was available to most DO's and most were limited to three lines; however, some had more.

The average number of local commercial lines per office depended on the type of office. Conventional offices, which did not have questionnaire assistance or telephone followup, required 11 lines; decentralized offices, which had a questionnaire assistance operation but no telephone followup, needed 22 lines; and centralized offices which had both telephone questionnaire assistance and telephone followup, needed 59 lines.

Telephone assistance lines were installed shortly before questionnaire mailout (March 28, 1980). In decentralized offices, there were an average of 9 local lines for assistance (plus 4 WATS lines) and in centralized offices there were 10. Some of the assistance lines in centralized offices were retained for use in telephone followup and another 35 lines, on the average, were added. The telephone followup lines were installed in mid- to late April and were operational from 2 to 3 months.

Incoming WATS lines were installed in decentralized offices to provide toll-free calls for assistance in completing questionnaires to households outside the local dialing area.[5]

Facsimile transceiver/copiers—High-speed facsimile transceiver copiers (3M-9600's, generally referred to as FAX machines) were

[5]Of the 1,215 WATS lines installed, all but 5 were in decentralized offices; WATS lines were not available for 3 decentralized offices.

used to transmit large volumes of written data and directives between headquarters, the RCC's, and the processing centers. The RCC's also used the FAX machines to transmit program revisions and other data to their DO's. The primary need of the FAX machines in the DO's was to transmit local review and population and housing count data to the RCC's and to receive related processed data and inquiries from the RCC's.

One FAX machine was installed in each of 333 DO's by May 1980 (in time for the first transmittal of population and housing count data). DO's within a short distance of an RCC did not receive a FAX machine; instead, courier service, which was estimated to be cheaper, was used to transport data. Another 55 transceiver/copiers were installed at headquarters, in the RCC's, or in the processing centers.

Each FAX machine required two FTS lines so it could transmit and receive simultaneously. GSA agreed that the Bureau could have free use of the FTS lines after 5:00 p.m.; by having the Bureau send the bulk of its transmissions after that time, the census would not overload the FTS lines during regular working hours. Even then, some transmissions had to be staggered, particularly during the preliminary population and housing count operations (see p. 35).

There was some difficulty getting the 3M-9600's removed from the offices; several were not picked up until weeks or months after the DO's closed. Another problem was that the contract between the Government and the private contractor did not provide for the return to the company of unused supplies.

Memorandums and mailgrams—Memorandums and mailgrams were used to communicate changes in procedures and to give direction to the RCC's and the DO's. From January I to July 31, 1980, 296 memorandums were issued in the regional office memorandum series and 248 in the DO memorandum series. These were sent by mail, but when it became apparent that it was taking too long for the mail to reach many of the offices, headquarters began using "mailgrams" to disseminate urgent procedural changes. In addition, many RCC's issued their own series of memorandums to the DO's.

PERSONNEL

Recruiting System

As in the past, staffing requirements for census field operations were massive as well as unique in nature. The Census Bureau had to find several hundred thousand applicants, determine their qualifications, and employ and train them in a relatively short period of time. Accomplishing this task was very difficult due to the nature of the job: many positions were for a very short duration, the pay rates were not attractive in all communities, the labor pool was small in some areas because of high employment, and enumerator jobs sometimes were difficult, frustrating, and even dangerous.

In March 1979, the President waived the requirements of the 1978 Civil Service Reform Act to enable the Census Bureau to develop a system for recruiting temporary census employees through Federal political referral, State agencies, national and local civic organizations, minority and women's groups, and other appropriate sources. This meant that, as in previous censuses, the recruitment process gave preference in most instances to persons recommended by the political party of the incumbent administration. It had been the Census Bureau's experience in prior censuses that this was an effective method of attracting large numbers of applicants, especially for supervisory positions. For 1980, however, the Bureau encountered problems of timing and coordination with the political referral sources in trying to get the best possible candidates and, after hiring, in subsequently maintaining undivided lines of authority within the census field organization.

It was the Census Bureau's goal to hire a workforce in each district office that was representative of the population for that area and, specifically, to hire an enumerator for each ED who lived in that area. To meet that goal required contacting as many diverse sources of job candidates as possible.

Census Bureau headquarters had a director of recruiting; reporting to him were regional coordinators (one in each RCC) who recruited candidates for DOM positions in conventional and decentralized offices and ADOM positions in centralized offices. (Except in Chicago and Denver, the regional coordinators were released on April 19, having completed their work.) The DOM's and ADOM's were, in turn, responsible for recruiting persons to fill positions in the DO's. As mentioned above, the DOM's in conventional and decentralized offices were assisted by FOA's for employment. All of these—director of recruiting, regional recruiting coordinators, conventional and decentralized DOM's, ADOM's, and FOA's for employment—were recruited through political referral sources, which generally concentrated on filling top DO supervisory jobs rather than on finding candidates for crew leader, enumerator, or clerk positions. DOM's for centralized DO's were all career Census Bureau employees.

The recruiters' authority was limited to identifying candidates for jobs (ideally 4.00 for each position in centralized offices and 3.25 in decentralized and conventional offices), but in practice extended to recommending specific individuals for regional management to hire. Census Bureau officials (regional directors, RCM's, etc.) ultimately had the responsibility for selecting and appointing employees from among the candidates identified through the recruiting system.

The ADOM's and FOA's for employment were responsible for seeking job applicants, testing them, maintaining recruiting and testing files in the DO's, and supplying the selecting officials with lists of qualified applicants. It was their job to distribute recruitment posters and post cards (form D-261; see app. 5C) to business establishments, community groups, or other places where there was heavy pedestrian activity, and to contact a broad array of referral sources: elected officials, State employment agencies, and government offices and agencies. The community services specialists (CSS's) supplied information to the recruiters about minority organizations interested in referring job applicants.

The DOM's and census information technicians (CIT's) were responsible for releasing information relating to recruitment to the news media.[6] Local news stories about the availability of census jobs complemented the national promotional campaign. The RCC's authorized a limited amount of paid advertising in newspapers in areas where DOM's had difficulty in meeting recruitment goals.

[6]The CIT's are discussed in ch. 4.

Qualifications

Every job applicant had to pass a written test and a structured oral interview and meet certain other requirements before being hired as a census worker. Persons interested in applying for census positions completed an application form (D-263, see app. 5C), which obtained information on their suitability for employment.

1. A person had to be physically fit for the job, although there were a number of jobs for which handicapped persons could be considered. Enumerators had to be able to walk and climb stairs. Most workers had to be able to read small print on census forms and speak and hear normal conversation.
2. An applicant generally had to be at least 18 years old, although persons age 16 or 17 could be hired if they met conditions of employment set by State and local laws and were either high school graduates or had equivalent education or work experience. In April 1980, the Bureau received approval from the Office of Personnel Management (OPM) to hire high school students age 16 and older, subject to State and local laws regarding their employment. There were no education requirements for persons 18 years old and over.
3. Applicants were expected to be available to work 40 hours a week. While part-time work could be approved as necessary, it was discouraged, especially during early recruiting and hiring.
4. Persons were to have a satisfactory work record for the past 5 years. Poor job performance, dishonesty, immoral conduct, unreliability, or conviction of a law violation since age 18 for something other than a minor traffic infraction could be the basis for disqualification.
5. Anyone barred from a civil service examination could not be considered for employment.
6. An applicant for enumerator or crew leader positions could not have been employed as a tax assessor, tax collector, or law enforcement officer within 6 months prior to application.
7. Federal civil service annuitants were discouraged from applying, since the reduction in pay required by law would generally have made employment in temporary census positions financially unprofitable. In February 1979, the OPM exempted military officers who had retired on or before January 11, 1979, from reductions in retirement pay for taking census jobs. The Census Bureau's request for exemptions for civil service retirees was denied.

The Bureau also asked for, and received, permission from the Department of Health, Education, and Welfare in 1979 to employ welfare recipients as enumerators during the census. This action allowed persons receiving Aid to Families With Dependent Children (AFDC) to work in the census without a reduction in their welfare benefits, at the option of State welfare directors; 38 States agreed to this procedure.

In October 1979, the Director of the Census Bureau waived the requirements that temporary census workers be citizens of the United States and extended the applicant universe to all qualified, legal residents of the United States.

Selection Aids and Procedures

Description of selection aids—The primary selection aid used in the 1980 census was the written test. The nonsupervisory version, which contained 54 multiple-choice items and lasted an hour, was administered to candidates for the following positions: enumerator, crew leader, clerk, and SOC. It consisted of five parts, which measured the applicant's ability to do clerical work, read, do arithmetical problems, interpret information and evaluate alternatives, and organize information. The supervisory test contained 30 multiple-choice items (requiring analysis and calculation), for which an hour was allotted for completion, and was given to applicants for the following positions: DOM, ADOM, FOS, OOS, AOS, SPOS, FOA, and OOA. This test focused on measuring skills needed by supervisors: problem solving, ability to manage, and evaluation of job candidates.

Beginning in March 1980, at the urging of Hispanic groups, the Bureau developed a Spanish-language translation of the nonsupervisory test. Applicants who passed the Spanish-language written test still had to exhibit English-language proficiency during an oral interview. Of 26 sampled district offices, 16 had Hispanic populations over 8 percent. In these latter, an average of 11.5 percent of the Hispanic and 3.7 percent of all the applicants took the test in Spanish.

At the time the tests were administered, a second selection aid was collected from job-seekers—the application form. For nonsupervisory employees and for crew leaders and SOC's, this was form D-263, "Census Taker Jobs," which gave a brief description of census positions available and the general qualifications for census work, and asked questions about work experience, availability and willingness to do certain kinds of work (such as evening or public-contact work), physical abilities and limitations, and general background. The nonsupervisory candidates also were asked to fill out a Cultural Familiarity Questionnaire, D-263A, on which they were to indicate which culture in their community they most identified with and were most familiar with. Seventeen specific ethnic and racial groups were listed, or the candidate could mark "Other" and specify a different culture. The purpose of the Cultural Familiarity Questionnaire was to aid selecting officials in determining the best qualified persons to serve in field jobs in particular communities. (See app. 5C for facsimiles of the D-263 and D-263A). The application form for supervisory candidates was the Personal Qualifications Statement, SF-171, which was the standard application form for all Federal job applicants and which covered most of the topics described above in relation to the D-263.

A third selection aid was the structured-interview guide. Separate guides were developed for the following positions: enumerator, crew leader, SOC, clerk in office processing operations, and payroll and office services clerks. One guide was developed for interviewing all supervisory candidates, but some questions were designated for particular positions only. Prospective clerks, enumerators, crew leaders, and SOC's could be interviewed by telephone; others had to be met face-to-face.

The fourth selection aid was the Employment Reference Check, which was intended to ask an applicant's previous employer certain questions about the applicant's dependability in attendance and job performance. It was used only for candidates who had passed the written test, met all qualifications on the job application, satisfactorily completed the oral interview, and were under serious consideration for employment.

Development of selection aids—The 1980 census selection aids were designed to be job-related and nondiscriminatory. That is, the aids were to measure only skills that were necessary to the satisfactory completion of census jobs.

The selection aids were developed, tested, and evaluated in the 1980 Selection Aid Validation Study (SAVS).[7] The study's major purpose was to develop employee selection aids and procedures on the basis of which the Bureau could make valid inferences regarding job performance for all racial, ethnic, and sex groups. As part of the SAVS, a content-validation phase was designed to establish the job-relatedness of the selection procedures. The first step of content validation was to undertake, beginning in 1975, an analysis of key supervisory and nonsupervisory jobs in terms of what tasks had to be performed in relation to each job and what knowledge, skills, abilities, and personal characteristics the jobholders would need.

Once the job tasks and qualifications were identified and weighted as to importance, written test items were designed to measure whether a candidate could perform the tasks. Qualifications that could not be measured by the written test were assessed through one of the other selection aids, or were considered unmeasurable. The team of Bureau personnel writing test items was instructed to set all items in the context of census work, to make sure the reading level was consistent with job content, and to be sensitive to cultural differences that might affect the way applicants of different races or ethnicities perceived and responded to a test item.

The nonsupervisory test was given a preliminary tryout among selected headquarters personnel in February 1977 and was tested in the 1977 Oakland, CA, pretest and in the 1978 dress rehearsal census of lower Manhattan (see ch. 2). The test was revised—cut in length and individual questions changed—based on these evaluations. Revisions to the supervisory test were made after it was evaluated in a "dry run" at headquarters, in the 1979 prelist operation, and in a headquarters reliability test in 1979 when it was administered to headquarters applicants for DOM positions.[8]

Another phase of SAVS was conducted during the census itself. This was a criterion-related study to establish the predictive validity of the nonsupervisory test, i.e., whether results on the written test could predict how one performed on the job. This study, which is described in detail in chapter 9, was conducted in a sample of 26 centralized and decentralized DO's that had about 62,000 job applicants.

Test administration, security, and scoring—Nonsupervisory tests were administered by clerks working under the ADOM's and FOA's for employment. The clerks sent a "Notice to Report for Test" to persons who were on referral lists or otherwise had called or written the DO (e.g., using the D-261 recruiting brochure) expressing an interest in working on the census. Supervisory tests were administered by RCC personnel. Each DO had a testing room and satellite testing sites were set up throughout the DO area in donated space as the need for additional capacity or proximity to candidates arose. Testing began right after ADOM's and FOA's for employment and their staffs were hired and continued, generally, until the pool of active workers and applicants on file was considered large enough to meet hiring needs; usually this meant until the second phase of followup enumeration was underway. Several test sessions were held at each site each day, usually at 2-hour intervals to allow enough time to give instructions and collect materials.

All testing materials were kept in a secure location at all times to prevent unauthorized circulation of tests. Also, to prevent cheating during administration of the nonsupervisory test, two versions (A and B), identical except for different arrangement of items, were provided, so that persons sitting side by side had different versions of the test.

To pass the nonsupervisory test and be considered for enumerator or clerical positions, an applicant had to correctly answer 21 or more of the 54 questions; to be considered for crew leader or SOC, the candidate had to obtain a score of 26 or more. To pass the supervisory test, one had to get 15 or more of the 30 test items correct.

After the tests were scored, applicants were sent postcards informing them of whether or not they had passed.

Some 1,156,000 job candidates took the nonsupervisory test, of whom 922,000, or 79.7 percent, passed. (In some centralized offices, nearly half of the applicants failed, and it often was necessary to reconsider such persons to recruit sufficient staff.) Comparable figures are not available for the supervisory test, but estimates indicate a pass rate of about 60 percent for over 5,000 tests administered.

Selection—Supervisory employees (those who took the supervisory tests, but not lower-level supervisors such as crew leaders and SOC's) were hired by RCC personnel. Selections were to be based on passing the written test, the oral interview, and the reference check, but not on test-score rank. Political referrals were considered first. All DO employees were to be residents of the DO area. Affirmative-action guidelines were to be applied so that the DO staff, at all levels, was as representative as possible of the local population.

Nonsupervisory employees were hired by the DO supervisors. For instance, the FOS or FOA's chose crew leaders and enumerators, and the OOS hired the SOC's and clerks (except the few working under the other supervisors). Test scores were not used to rank those who passed the test, but an applicant had to obtain a score of 26 or above to be considered for crew-leader or SOC positions. In addition, candidates were grouped on the basis of whether they were high-scoring (33 or above) or low-scoring (21 to 32). Political referral candidates scoring 33 or above were the first to be interviewed for a job, followed by nonreferrals scoring 33 or above, referrals scoring 21-32, and nonreferrals with scores of 21-32. Before most of the hiring had been completed, the Bureau discontinued giving preference to political referrals and the ranking requirements.

Other variables that affected the order in which candidates were interviewed were whether they were indigenous to the area and/or familiar with its culture. Applicants who lived within an area were given first consideration for jobs in that area. Within each area, applicants who were of, or familiar with, the dominant racial or ethnic culture in the area were to be interviewed first.

[7]For a detailed discussion of SAVS, see Chapter 9, "Research, Evaluation, and Experimentation Program."

[8]The headquarters DOM's took the test on a voluntary basis; results were not a factor in their selection.

In all, about 460,000 employees were hired to work in the DO's at one time or another during the census, with about 270,000 working at the peak of activities. In the RCC's, about 1,800 employees were working at the peak of activities. Roughly 65 percent of the temporary hirees were women. The work force's racial and ethnic composition varied according to local conditions, the need for more or fewer staff in particular areas, and the like. In terms of the Nation as a whole, the racial/ethnic com position (based on crew leaders' reports, where only one category was to be selected) was as follows.

	Employed in field force		Percent in general population
	Number	Percent	
Total	458,523	100.0	100.0
Minority	124,217	*27.1	*20.3
Black	89,774	19.6	11.7
Hispanic	26,763	5.8	6.4
Asian and Pacific Islanders	3,544	0.7	1.5
American Indian	4,136	0.9	0.6

*Will not sum because of rounding.

Appointing and Releasing Employees

On the first day they reported for work or training, applicants selected for census work had to be appointed formally, and could not be paid until this was done. Supervisors (or other designated officials) appointed the persons who reported to them. There was an appointment folder for each hiree, that contained the following documents.

BC-112, Notice—Restriction on the Political Activity of Employees—This the hiree read and kept. The Hatch Political Activity Act generally limited Federal employees (including census workers hired through the referral system; see p. 12) to nonpartisan participation.

BC-50A, Application for Excepted Appointment in the Field Service, Notice of Short-Term Employment, and Appointment Affidavits—The hiree read the Privacy Act statement on the back of this form, which gave the Bureau's authority for, and purpose in, collecting the personal information he or she provided, and then completed the appropriate parts of the form.

D-293, Employee Check Digits Notification—Based on the person's social security number, the check digit was used in payroll processing.

SF-256, Self-Identification of Medical Disability—This the hiree completed if appropriate. The Bureau used the handicap data to measure its progress in hiring, placing, and advancing handicapped persons.

After reviewing the entries, the appointing official administered the oath of office. The hiree then acknowledged this and the affidavits that followed by signing part C of the BC-50A application (see app. 5C) and receiving a copy of the completed document. The folder then was turned in for administrative processing.

Figure 4. Oath and Appointment Affidavits

APPOINTMENT AFFIDAVITS

IMPORTANT — *Before swearing to or affirming these appointment affidavits, you should read and understand them.*

I do solemnly swear (or affirm) that —

1. **OATH OF OFFICE** — I will support and defend the Constitution of the United States against all enemies, foreign and domestic; I will bear true faith and allegiance to the same; I take this obligation freely without any mental reservation or purpose of evasion; and I will well and faithfully discharge the duties of the office on which I am about to enter, SO HELP ME GOD.

2. **AFFIDAVIT AS TO STRIKING AGAINST THE FEDERAL GOVERNMENT** — I am not participating in any strike against the Government of the United States or any agency thereof and I will not so participate while an employee of the Government of the United States or any agency thereof.

3. **AFFIDAVIT AS TO PURCHASE AND SALE OF OFFICE** — I have not, nor has anyone acting in my behalf, given, transferred, promised or paid any consideration for or in expectation or hope of receiving assistance in securing this appointment.

4. **AFFIDAVIT OF NONDISCLOSURE** — I will not disclose any information contained in the schedules, lists, or statements obtained for or prepared by the Bureau of the Census, to any person or persons, except as designated by the Director in accordance with law.

5. **AFFIDAVIT AS TO ARMED FORCES** — I am not receiving active duty pay as a member of the Armed Forces.

NOTE — *The oath of office must be administered by a person specified in 5 U.S.C. 2903. If by a Notary Public, the date of expiration of his/her commission should be shown. The words "So help me God" in the oath and the word "swear" wherever it appears above should be stricken out when the appointee elects to affirm rather than swear to the affidavits; only these words may be stricken and only when the appointee elects to affirm the affidavits.*

Whenever an employee was moved from one census job to another, and this involved a change in pay rate, a new BC-50A form had to be completed and processed, but the oath was not readministered.

Employees normally were released when they completed their assignments, or before if their performance was unacceptable. In these cases, the supervisor and the employee completed and signed a final payroll form, and the latter received a form SF 8, Notice to Federal Employee About Unemployment Insurance.

Pay

Paying decennial census field employees involved separate payroll operations for four distinct groups of personnel: Career Census Bureau employees from headquarters who had been detailed full-time to serve as DOM's or regional technicians, other RCC and DO full-time personnel, RCC intermittent employees, and DO intermittent workers. (Facsimiles of appointment and pay forms are included in app. 5C.)

Personnel from headquarters were paid through the Field Division at headquarters; pay for all others was handled by the RCC's. Employees from headquarters generally received the same pay due them in their regular Census Bureau jobs (which may or may not have had anything to do with the decennial census); however, some were given salary adjustments for accepting assignments in hard-to-enumerate areas. In addition, they could claim $35 per diem for travel, and reimbursement for other specified travel expenses. Except when detailed for more than a few days, they established residences within commuting distance of their field work; in such a case they received only actual expenses. When their temporary assignments were completed in the field, these people were reassigned to their original jobs and their salary adjustments were removed.

The RCC full-time personnel included the RCM, ARCM's for administration and field operations, supervisors, coordinators, geographic and other specialists, technicians, lead clerks, and some regular clerks. The DO full-time employees included the DOM, key supervisors and assistants, and a few SOC's and clerks, such as the SOC for special places and DOM's or ADOM's clerks. (See figs. 1 and 2.) Since full-time employees were appointed for terms longer than 180 days, they earned annual and sick leave.

Some of the RCC intermittent employees, who were largely clerks, earned leave, but most did not.

The DO intermittents (some SOC's, most clerks, and all crew leaders and enumerators) were appointed for fewer than 180 days and none earned leave. Many were reappointed at the end of their 180-day term in DO's where the field work was still in progress. Also, if a clerk became an enumerator or an SOC, for instance, or an enumerator became a crew leader, the employee had to be reappointed to reflect the change in pay rates. This applied not only to DO intermittent workers but also to RCC intermittents and to full-time employees. No employee could be paid until an appointment record reflecting the rate of pay claimed on the pay voucher was on file.

Employees in all four categories were paid biweekly, except for centralized DO intermittents, who were paid weekly. The more frequent pay for intermittent workers in urban, hard-to-enumerate areas was implemented to help reduce turnover. The Bureau used a manual payrolling system for DO intermittent personnel in January 1980; an automatic system covering everyone was introduced in February. Typically, an enumerator filled out an employee pay voucher for each pay period, indicating whether he/she was working on a hourly or piece-rate basis and whether he/she was entitled to mileage or "time en route." The voucher showed the number of questionnaires completed for each piece-rate category (a long form for an occupied unit, a short form for an occupied unit, or a short or long form for a vacant unit), the number of miles for time en route (if applicable), and any travel expenses (if applicable). Enumerators who were on piece rates were exempt from the minimum-wage provision of the Fair Labor Standards Act, so it was not necessary to monitor the number of hours they worked each week. The employee's record of travel expenses, a separate form submitted with the pay voucher, gave more detailed information about the number of miles traveled each day, tolls, parking fees, official telephone calls, and the like.

Pay rates for selected DO positions are shown in tables 1 and 2. When in training, all employees except enumerators received their regular hourly wage. Enumerators were paid $26 for a full day of training or $3.25 an hour for less than a full day. Where authorized, employees could claim $0.20 for each mile they drove their vehicles on official business[9] and, for enumerators only, $0.15 per mile for travel in followup 2. This last payment, called "time en route," was meant to reimburse enumerators working in areas where the housing units to be visited were far apart. Mileage generally was paid to crew leaders, enumerators, or top supervisors who had to make rounds in the field. Employees also could be reimbursed for toll fees, bus fares, parking fees, official telephone calls, and similar expenses when these were incurred in carrying out their duties.

The pay rates below are for the coterminous United States only. The rate structures were adjusted upward for Puerto Rico (7.5 percent) and Alaska and Hawaii (25 percent) because of cost-of-living variations from the U.S. norm.

Table 2. Hourly Salary Rates by Type of District Office

(Dollars)

Position	Centralized	Decentralized	Conventional
District office manager	—	9.85	8.75
Assistant district office manager (recruiting)	9.25	—	—
Field operations supervisor	9.00	8.15	7.30
Office operations supervisor	8.75	6.85	—
Administrative operations supervisor	7.10	5.45	—
Special-place operations supervisor	7.10	6.10	—
Field operations assistant	6.00	5.45	5.45
Office operations assistant	5.65	5.10	5.10
Crew leader	5.10	4.50	4.50
Senior administrative clerk	—	—	4.40
Quality control enumerator	4.75	4.20	—
Senior office clerk	4.45	4.00	4.00
Enumerator	4.45	4.00	4.00
Office services clerk	4.30	3.85	—
Clerk	3.75	3.55	3.55

—Represents zero.

[9]The mileage allowance was increased from $0.185 to $0.20 per mile in April 1980.

Table 3. Piece Rates by Type of District Office

(Dollars)

Centralized/Decentralized	Piece rate
Followup 1	
Long form, occupied unit	4.50/3.80
Short form, occupied unit	2.90/2.20
Long or short form, vacant unit	2.20/1.75
Followup 2	
Missing long form, occupied unit	4.50/4.05
Missing short form, occupied unit	3.25/2.40
Missing long or short form, vacant unit	2.50/2.00
Long form, failed edit	3.25/1.90
Short form, failed edit	2.85/1.45
Vacant/delete check	2.25/2.00
Nonhousehold source followup	2.50/1.55
Conventional	**Piece rate**
Long form, occupied unit	3.85
Short form, occupied unit	1.75
Long or short form, vacant unit	1.15
Post-enumeration post office check card	.06
Transient-night place	1.50
Transient-night package	.04

TRAINING

Introduction

The Bureau's training program for field personnel followed a basic pattern established in previous censuses. The instruction was standardized so that the results would be uniform nationwide, varying only by the type of district office procedure (centralized, decentralized, or conventional). This was reinforced through the use of verbatim training guides that the instructors read to their trainees.

A "pyramid" system was established, so that each employee other than an enumerator or clerk, after training (that included "how to train") and a few days' or weeks' experience on the job, became the trainer of the people he or she supervised. The trainers at each level would rely on the "instructions to trainers" module in their verbatim guides. Where the flow of field work permitted, supervisors and clerks (for example) might be trained on one operation, complete it, and then repeat the process for subsequent tasks.

The only basic change for 1980 was a greater reliance than in the past on audiovisual materials. The Bureau spent about $6 million to purchase film strips and accompanying audiotape cassettes from an outside contractor; these were the only aids of this sort used in the district offices, where they were favorably received but generally considered to reflect ideal (rather than actual) situations. These aids were not formally evaluated. The Field Division at Bureau headquarters had its own training branch, staffed by education and training specialists and technicians who planned, designed, and developed the guides, workbooks, and job aids. As in the past, a separate branch in another part of the Field Division wrote the procedures to be used in taking the census. Because deadlines were not always met, training sometimes preceded the final determination of procedures, or the latter could be revised before the training materials could be changed. Both procedures and training were modified frequently; the field offices received changes by ordinary mail, mailgram, facsimile transmission, or telephone, and were responsible for dissemination from there.

During the census, the Bureau conducted an alternative training experiment (see ch. 9) for 2,400 followup enumerators in three pairs of decentralized district offices that had been matched on variables related to the difficulty of enumeration. The pairs were West Queens and Southwest Brooklyn, NY, Pittsburgh West and Pittsburgh East, PA, and South Dayton and West Columbus, OH. Each office in a pair was randomly assigned one of two training methods—either the standard (used as a control) or one called job-performance-aided (JPA) training. JPA modified the verbatim lectures, provided reference rather than instruction manuals, and emphasized performance rather than information in its content. In both offices of a pair, the enumerators' reactions to the training were measured and compared immediately after classes and then several weeks later; reported differences were small.

Administrative Training

In general, each regional census center (RCC) staff was responsible for training its regional technicians and the various district office administrators. The nature of this training is described briefly below; the training materials are listed in appendix 5B.

Regional technicians (generalists)—These persons were prepared to act as liaison between the RCC's and the district offices by learning their job duties and being given an overall picture of the census. Those dealing with conventional offices had classroom training and used a self-study cassette in November 1979; regional technicians assigned to centralized or decentralized offices received their instruction in the same manner, but in two stages— one in November 1979 and the second in March 1980. In some regions the latter was a joint session with district managers and field operations supervisors, and provided a forum for answering questions and resolving problems.

District managers—Training here was similar to that of the regional technicians. The managers began with a self-study cassette that introduced them to the Census Bureau and the census. Conventional-office managers' training was confined to one 3½-day session in November 1979. Managers of centralized and decentralized districts had two sessions—3½ days in December, mainly on precensus activities, and 2 more days in March 1980 about operations after Census Day. All meetings included discussions and group exercises. Once on the job, many of the managers discovered a significant part of their work had to do with public relations, in which their audiences and other contacts were principally concerned with post-census operations and the expected results. The managers felt that their early training had not prepared them sufficiently for this aspect of their duties nor for some of the technical complexities of managing a census field operation. The topics and materials used in the centralized and decentralized district managers' training sessions were similar; those for conventional offices were less detailed, mainly because none of the mail operations had to be covered.

Field operations assistant for employment (decentralized and conventional)/ assistant district manager for recruiting (centralized)—The Bureau did not create these positions until late 1979. Both the manual and the training guide were written concurrently during a 4-week period in November and December, and training took place in January 1980.

Administrative operations supervisor/senior administrative clerk—Training here, using a verbatim guide, audiovisual aids, and the self-study cassette for district managers, emphasized practice in the various office tasks, so that these persons could, in turn, train their administrative clerks.

Office Training

For centralized offices, the regional staff, and for decentralized and conventional offices, the regional technicians, trained the office operations supervisors, office operations assistants, and senior office clerks, who instructed the clerks who worked under them. All had training packages with verbatim and home-study guides, audiovisual materials, and the like, although they did not contain as much detail about how the various census operations fitted together as did the administrative training programs. In many cases, the supervisors' knowledge of these operations was limited to a review of the relevant training guides and manuals before using them for teaching purposes.

Field Training

The regional staff trained the field operations supervisory staff at various central locations; in turn, they trained the field operations assistants, who instructed the crew leaders; and the crew leaders taught their enumerators in schools, churches, libraries, etc., in their respective crew-leader districts. As much of the training material as possible was incorporated into the verbatim guides, including exercises, tests and answer keys, and other teaching devices, while all had manuals and other references in their training kits. The only major problem encountered was one of logistics—having the training materials on time, in sufficient quantities, and in complete sets, distributing them, and seeing to it that everyone received change sheets and missing items.

Over all, the trainees' reactions to the various kinds of training were favorable, but many felt that it tended to assume ideal situations and did not equip them for "reality," e.g., emergencies, large numbers of procedural changes, slow learners, and the need at times to learn through trial and error.

Training for a particular operation normally took place just before that operation began. For scheduled dates, see the staffing calendars in appendix 5D. Once an operation was under way, any replacement workers would be trained on the job, unless circumstances warranted hiring enough additional staff to make another class worthwhile.

MAIL CENSUS PROCEDURES

Introduction

There were two basic types of mail district offices—"decentralized" and "centralized"; most opened in early January 1980. The 286 decentralized offices were located primarily in suburban areas and small cities where the mail return was expected to be relatively high and the enumeration would present few problems. (There also were 12 "two-procedure" offices [see p. 5] that covered both decentralized and conventional areas.) The decentralized enumerators, working out of their homes, contacted households by telephone or personal visit, as necessary, to obtain missing information; the district office managers were hired locally. The 87 centralized offices generally were in inner-city areas where the mail response rate was expected to be lower than average and where followup might be difficult and thus require closer supervision. Here, clerks in the office collected as much missing information as they could over the telephone, while enumerators personally visited nonresponse households and obtained data from respondents who could not be reached by telephone. The centralized district office managers were experienced Census Bureau employees.

Workloads also varied by office type and reflected the difficulty of the assignments: The average ratio of crew leaders to enumerators was 1 to 13 in decentralized areas and 1 to 9 in centralized; and of enumerators to housing units, 1 to 550 in decentralized, and 1 to 325 in centralized areas.

Aside from these differences, differential pay rates, and a few coverage-improvement operations found principally in centralized areas, the decentralized and centralized field and office procedures were basically the same. Variations are explained in figures 5 and 6.

Once the offices were opened, the first efforts were directed at equipment and supplies, maps, publicity, recruiting, and other preliminary activities—all with their attendant difficulties to be surmounted—as noted at the beginning of this chapter. Hiring, training, and assigning personnel followed to begin work on the pre-April 1 operations (see ch. 3) aimed at enchancing the master address registers and making certain that every possible residence would receive a census questionnaire in the mail on the appointed delivery day, March 28. The first two operations dealt with updating the tape address registers(TAR's) obtained from commerical sources and reviewed once in June 1979 through the advance post office check. Centralized offices depended almost entirely on TAR's; decentralized offices usually had TAR's for some areas and prelist address registers for others. The latter were lists that Bureau employees had compiled by visiting every address in the fall of 1979. The three updating operations were:

- Precanvass—traveling every street in every TAR ED to verify that there was an address for each housing-unit structure and special place, adding, deleting, or correcting entries as necessary, so that office clerks could hand-address an appropriate questionnaire for each housing-unit addition or change. An enumerator was to be assigned one or more ED's.
- ED and block coding (the "yellow card" operation)—clerically or by personal visit assigning a geographic code to each TAR address, including those reported in the post-office checks, that could not be geocoded by computer.
- Post office checks—during this same period, the post offices performed two checks—one in early March 1980 (the casing check) and again at the time the carriers delivered the questionnaires (the time-of-delivery check)—to make certain that there was a questionnaire for every residential mailing address

on each carrier's route. These questionnaires had either mailing labels generated by computer from the TAR's and keyed prelist address registers, or were addressed by hand from unkeyed prelist address registers, the precanvass, or other additions. These two checks (also discussed in ch. 3) resulted in further reports of missing questionnaires or missed addresses and also required yet more hand-addressing and field or office coding on the part of the district office staff.

In March, it was discovered that some of the serial numbers appearing on the mailed-out questionnaires in prelist areas did not match the corresponding listings in the master address register. This was the result of an error in the computer program used to assign the serial numbers to the mailing pieces. The condition was sufficiently widespread that the Bureau issued correction procedures and a form, D-1134, on which cancelled listings were printed out. Between March 24 and March 31, clerks in decentralized and centralized offices had to change the serial numbers in the master address registers to match those on the questionnaires, record these changes on the D-1134 forms, and send the forms to headquarters. Later on, it was discovered that in isolated instances, identical ED numbers had been assigned to prelist and TAR (tape address register) ED's. Although the numbers in the MRF (master reference file) and on the master address registers had been corrected, the ED numbers on the corresponding questionnaires had not. Consequently, when the mail returns for these ED's began coming in, they had to be recognized and checked in accordingly.

Questionnaire Assistance

By Census day, all the mail district offices had telephone lines installed (see p. 16) for the purpose of helping respondents complete their questionnaires. The offices were to offer this service, overseen by the office operations supervisors and their assistants, from 8:30 a.m. to 9:00 p.m., March 28 through April 11. The clerks, trained by the senior office clerk, followed directions in the D-545 Questionnaire Assistance Manual. They had to tally and classify all incoming calls, using a separate form D-399, Record of Contact, for each one and, if necessary, refer the cases through their supervisiors to other staff members for handling. Completing a form D-375, Questionnaire Assistance Referral, served this purpose. The form might note when an enumerator would find the respondent at home, ask that a Spanish-language questionnaire be sent, or call for replacement of a lost questionnaire. The manual provided background for answering a variety of questions, such as why the census collects certain data or how to apply for a census job, as well as how to complete the household questionnaire. For specific items and situations, the clerks also had the D-561 Questionnaire Reference Book that the enumerators used. Some 1,845,000 telephone calls were reported during the census.

All district offices provided the same service for respondents who appeared in person. Most offices, particularly those in centralized districts, had one or more walk-in assistance centers elsewhere as well. These were located in areas where there were significant numbers of elderly and/or low-income persons, or where people were expected to have difficulty reading and writing English. The walk-in centers usually were set up with the help of the Bureau's community services program (see ch. 4) and often were associated with neighborhood, community, or minority groups. Bureau clerks or enumerators[10] were present at widely announced times each day, usually from March 28 to about April 20, to assist respondents. Each centralized office was authorized at least one center, and some had more. Opening a center was optional (with regional permission) in decentralized areas. There were about 200 walk-in centers in all, with approximately 50,000 visits reported.

Costs for telephone and walk-in assistance were estimated at approximately $2.0 million.

Receiving the Mail Returns

The Bureau made arrangements with post offices responsible for the ZIP Codes assigned to the various district offices to deliver the mail-returned household questionnaires to those district offices once, and sometimes twice, each working day.

Sort and serialize—Beginning on March 31, a staff of clerical employees, supervised by the office operations supervisor and two senior office clerks, counted, sorted, and serialized the mail as it came in. (Questionnaires were not supposed to be returned before April 1, but enough were to warrant an early start on processing.) The staff manually counted and sorted the envelopes by the ED number found in box A1 of the address label, and then put them in numerical order within ED according to the serial number appearing in the address label box A6. They placed any forms not belonging to their own DO in a "miscellaneous" carton for later distribution. The D-513D Mail and Enumerator Return Processing Manual provided instructions. This staff also resolved situations where the returns could not be identified readily, such as where the address label had been mutilated or lost. This involved tracing the address, if necessary by telephoning the household, and then obtaining the appropriate codes from the D-327 block header record and the D-102 master address register. Progress was reported to the regional census center daily and weekly.

Open, check-in, H4 edit—The next operation, which began on April 2, or as soon thereafter as there were sufficient returns to work on, involved opening the sorted and serialized envelopes and noting the receipt of each questionnaire on the appropriate address register. If the respondent asked for a Spanish-language questionnaire, the incoming questionnaire was routed to other clerks for handling. At the same time, the clerks compared the respondents' entries, if any, for question H4 (the number of housing units physically located at that street address) with any number less than 10 shown in the address register. If a respondent reported *more* units than the register, this fact was noted in the address register (along with the names of the other householders in the structure) and on the questionnaire, so that the case would be assigned to an enumerator to resolve the discrepancy. The clerks also dealt with and resolved check-in problems, such as:

- An address transferred to another ED after the questionnaire for it had been mailed. (This required changing the codes on

(Text continues on p. 24)

[10]While respondents were at liberty to ask anyone for help in completing a census questionnaire, Bureau policy prescribed that, to preserve the confidentiality of the return, any *official* assistance had to come only from a sworn census employee and not from a center volunteer.

Figure 5. Flow Chart of Address Registers and Census Questionnaires (Decentralized)

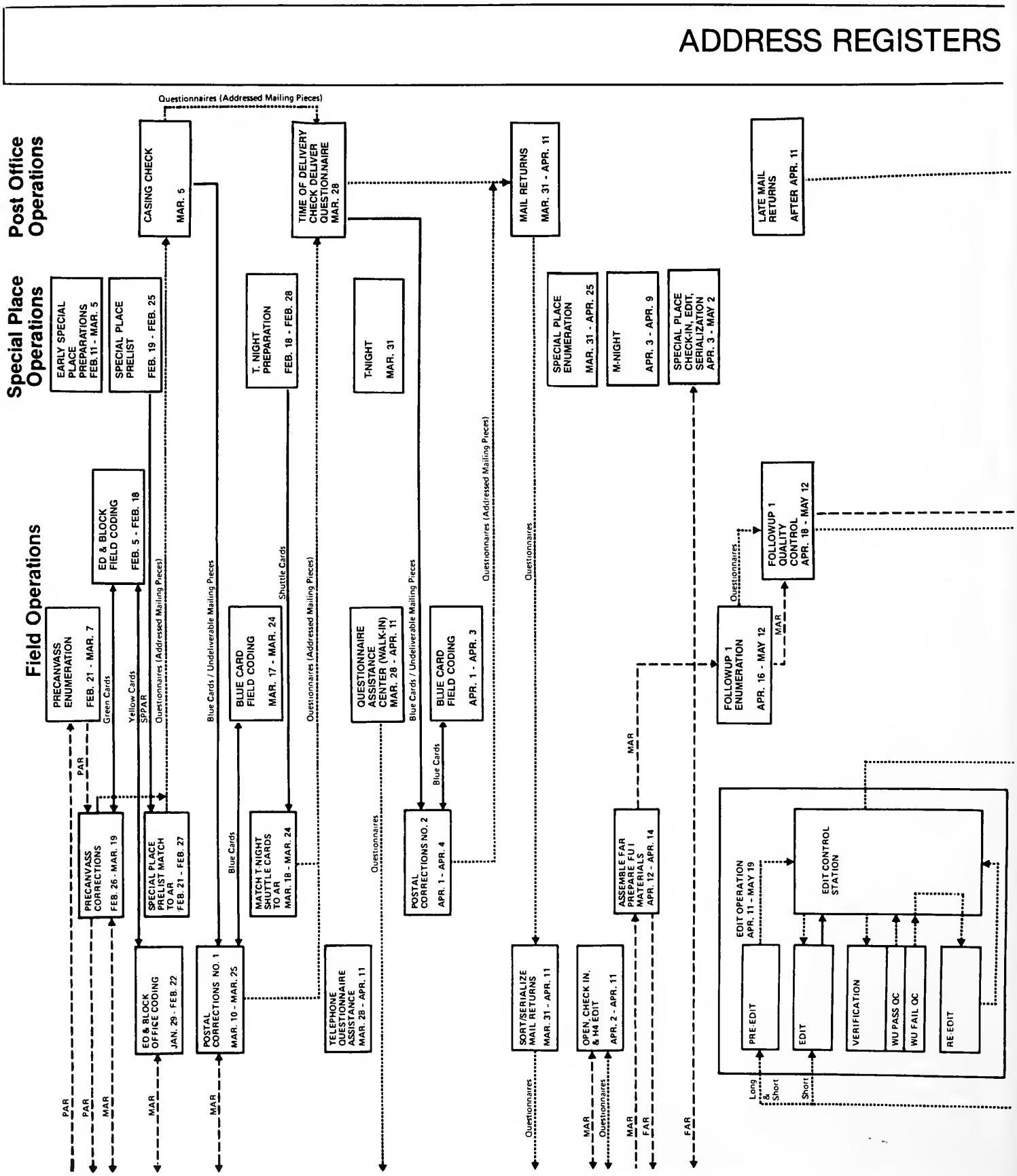

AND QUESTIONNAIRES

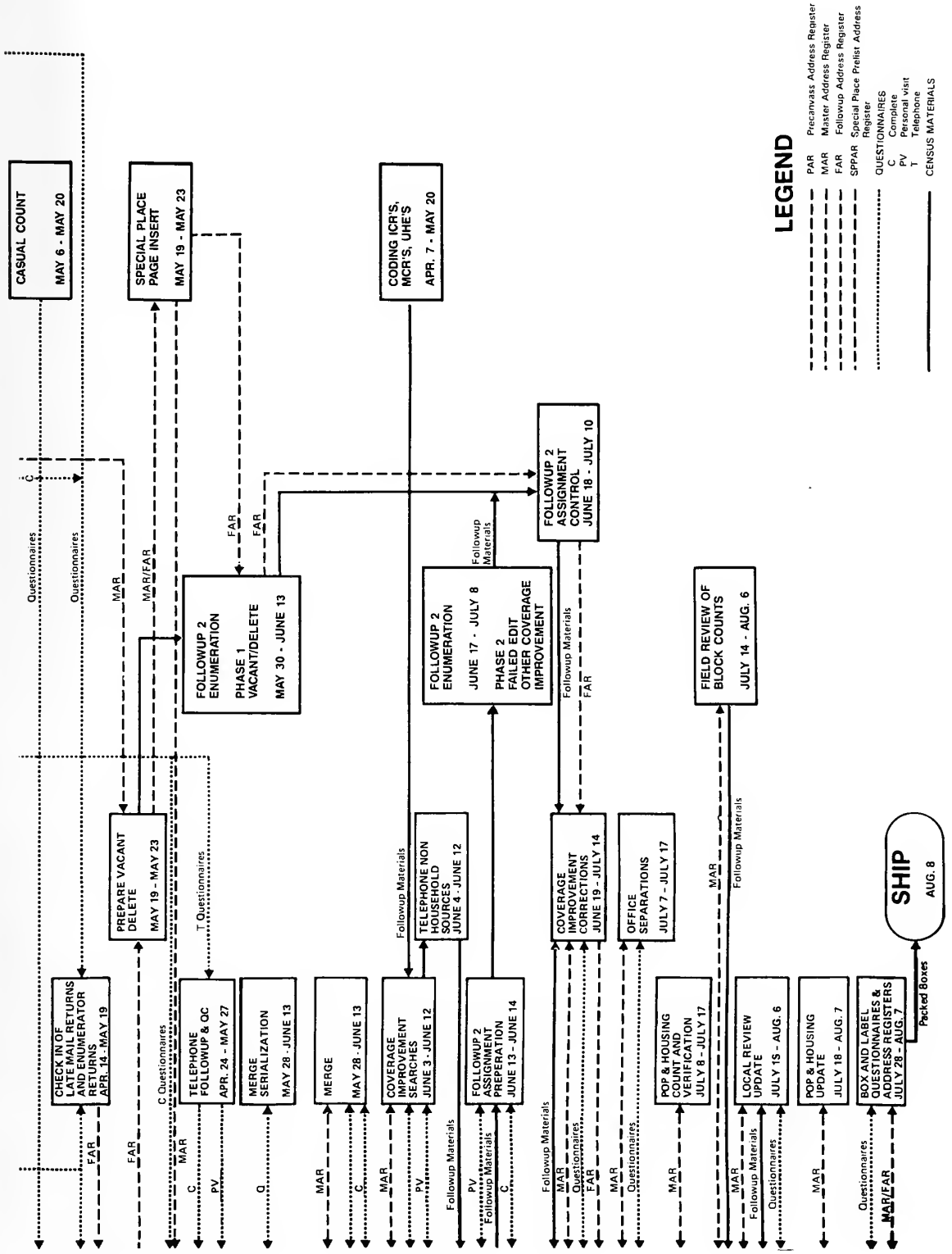

Figure 6. Flow Chart of Address Registers and Census Questionnaires (Centralized)

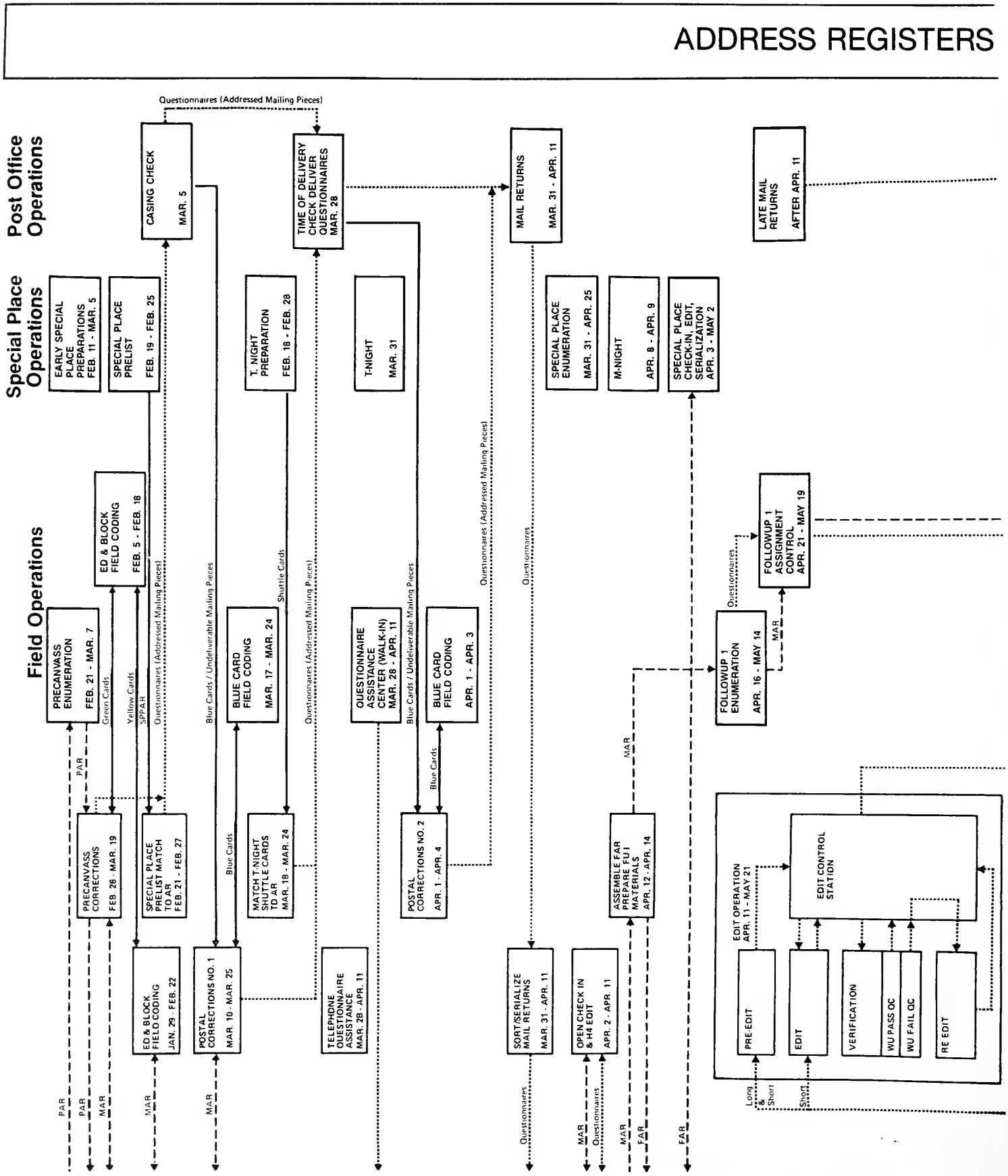

AND QUESTIONNAIRES

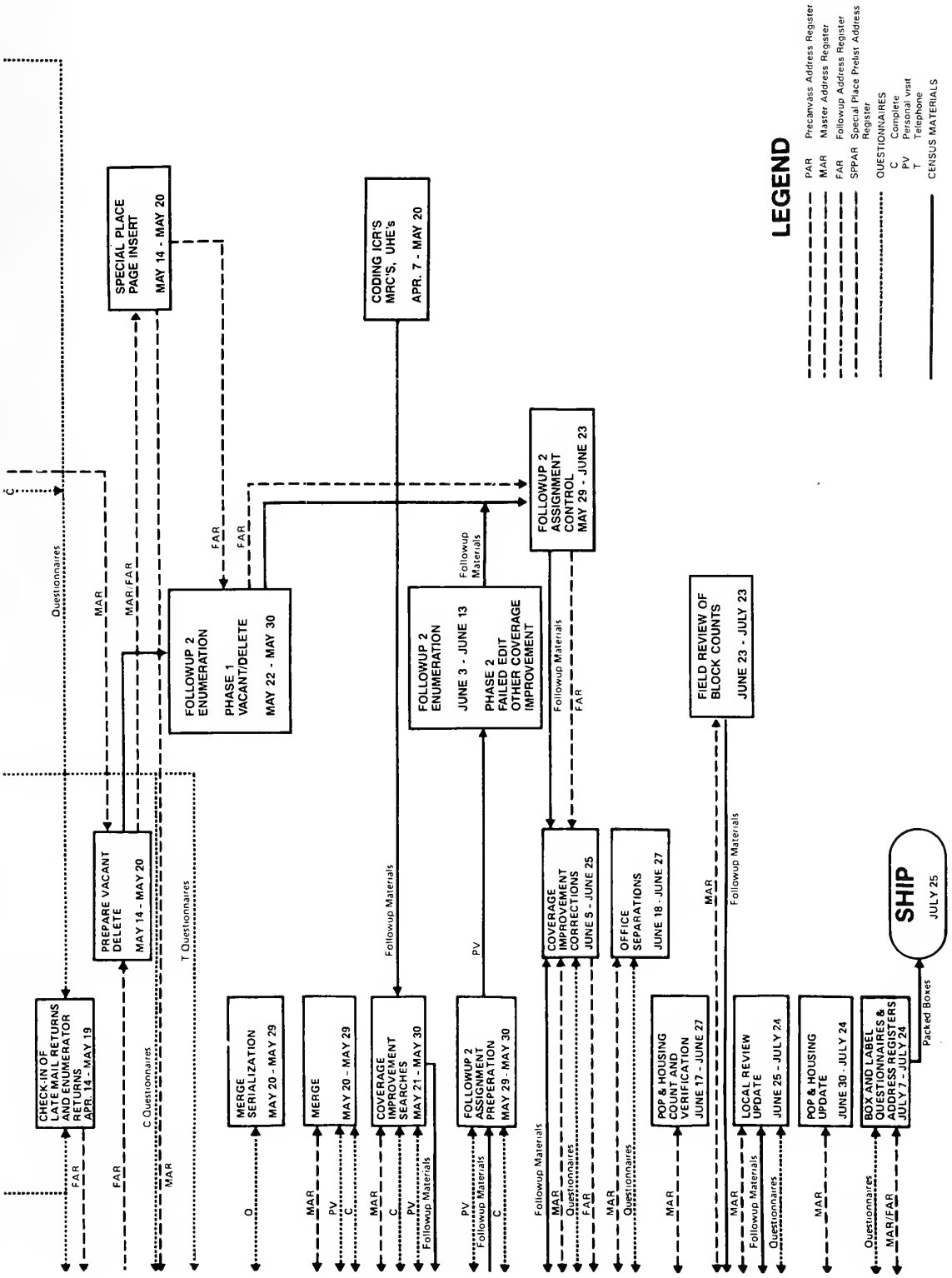

the questionnaire and accounting for it in the appropriate register.)

- A household reported its usual home elsewhere (UHE). (The register was so annotated, and the questionnaire was sent for transmittal to the appropriate district office. This was done by consulting the Zip Code by DO Directory (form D-332).)
- The short-form questionnaire returned should have been a long form, or vice versa. (The code "S" (short) or "L" (long) on the questionnaire was changed to conform with the one in the address register, and the questionnaire was sent for transcription to the proper form.)

They entered in column 9 of the address register the date the questionnaire was received, and in column 10, the number of person-columns completed. Other clerks sorted the questionnaires ready for further processing into work units, each unit containing either the short- or long-form questionnaires for one ED.

The entire operation continued in this fashion until shortly before April 16, the date when all mail offices were to begin enumerator followup 1. The Bureau had established this date on the basis of experience in the 1970 census and in the 1980 test program as the one by which roughly 90 percent of the expected mail returns would be received and checked in. The 1980 census experience turned out to be that, nationally, this figure was 95 percent. Thus, some district offices were "swamped" with more mail than anticipated.

This situation was compounded by the fact that mail processing often fell short of the expected production volume. A major reason was that the production standard for opening, checking in, and performing the H-4 edit upon which staffing was based (575 questionnaires per day per clerk) was too high, and not all district offices were able to add enough clerks to catch up. To begin followup 1 on time in some places, the enumerators were sent out with caseloads that included households whose questionnaires had been received but not checked in. This meant that they made calls to households that had already mailed returns (for which the enumerators on piece rates were not paid) or turned in duplicate questionnaires. In some cases, the district offices interrupted followup 1, or delayed its start, to complete check-in and annotate both the offices' and the enumerators' registers.

Between 30 and 40 decentralized offices suspended followup for 2 or 3 weeks after the first day or two because significant numbers of questionnaires with rural route addresses were found to have been delivered without regard to box number or designated household/serial order. Many mail returns, checked in by serial number, were attributed to the wrong households; district office clerks had to review the questionnaires and determine which households really needed to be visited, either for entire interviews or to obtain sample information where the wrong type of questionnaire had been returned.

In certain prelist areas that had street addresses, it was discovered too late that the Postal Service did not provide local delivery and that some residents collected their mail from post-office lock boxes instead. As the lock-box numbers did not appear on the address registers or on the questionnaires, check-in and followup were difficult. This situation usually was resolved by having an enumerator hand-deliver a questionnaire to each such housing unit. (See p. 31.)

During the weekend preceding April 16, the clerks separated the pages of the master address registers, which reflected all cases without responses as of that time. The mail check-in then was resumed as before, except that the returns were entered in the followup address registers as "LMR" (late mail return) and reported as such on a form D-376A, Report of Late Mail Returns, that went to the enumerators, who also annotated the receipts in the master address registers.

Mail Return Rates

Based on manual counts reported by the district offices, the final mail return for all occupied housing units in the 1980 census was 83.3 percent nationally, with 95 percent of the mail responses received before followup 1 began. Table 4 expresses this return rate by region and by type of operation—centralized and decentralized; it does not distinguish between short- and long-form questionnaires (see table 5).

In 1984, statisticians at Bureau headquarters estimated the 1980 mail return rates using computerized tallies derived from the FOSDIC (film optical sensing device for input to computers) processing operation (see ch. 6). This analysis revealed a national response rate equaling 81.31 percent of the occupied housing units, slightly lower than the 83.3-percent rate computed from the field counts in table 4. The discrepancy may have been the result of inaccuracies in filling the FOSDIC circles during district office editing and/or errors inherent in manual counting, and of the FOSDIC figures including deleted units in their bases while the manual counts did not. In any case, the analysts were unable to determine which measurement, if either, was more accurate. Following are some of the statisticians' findings:

- The average response rate for decentralized areas (short and long forms combined) was 82.20 percent, as compared with the 81.31-percent national rate, while the average for centralized areas was 75.63 percent.
- Broken down by type of form and type of procedure, response for long forms was 7.35 percentage points higher in decentralized areas than in centralized, and for short forms, 6.47 points higher.
- The response rate in TAR (tape address register) areas was 81.43 percent and in prelist areas, 81.14 percent—both close to the national 81.31-percent figure, and with little difference in rate by type of form.

Table 5 expresses the differential between the mail return rate for long- and short-form questionnaire by region, again based on the FOSDIC tallies. For a map of the States, by regional office, see chapter 1, appendix 1F.

Followup 1

This operation was designed to obtain completed questionnaires (1) from households that had not mailed them in during the first 2 weeks after Census Day, and (2) for vacant units where there was no one to respond; also to delete entries for nonexistent units. Enumerators personally visited each such address.

Table 4. Manual Counts of Regular and Late Mail Returns, by Region and Type of Operation

Region	Housing units			Mail returns			Mail return rate (percent)			
							Occupied units			All units
	Total	Vacant	Occupied	Total	Regular	Late	CT	DT	Comb-ined	
Total	84,064,513	7,082,390	76,932,123	64,140,121	60,969,776	3,170,345	76.3	84.4	83.3	76.3
Boston, MA	7,093,015	678,670	6,414,345	4,485,452	5,161,866	323,586	81.6	86.2	85.5	77.3
New York, NY	5,906,235	304,332	5,601,903	4,360,967	4,071,769	289,198	72.5	82.3	77.8	73.8
Philadelphia, PA	7,574,874	672,670	6,902,204	5,993,832	5,743,671	250,161	83.2	87.6	86.8	79.1
Detroit, MI	7,330,985	534,062	6,796,923	5,958,622	5,743,447	215,175	81.4	88.8	87.7	81.3
Chicago, IL	7,778,218	544,751	7,233,467	6,042,135	5,810,342	231,793	72.9	86.3	83.5	77.7
Kansas City, KS	6,983,918	569,780	6,414,138	5,642,478	5,409,852	232,626	75.1	88.8	88.0	80.8
Seattle, WA	3,556,255	285,518	3,270,737	2,697,386	2,561,340	136,046	(1)	82.5	82.5	75.8
Charlotte, NC	6,470,022	597,348	5,873,674	4,874,521	4,650,770	223,751	87.3	82.7	83.0	75.3
Atlanta, GA	9,617,637	1,044,278	8,573,359	7,046,639	6,670,134	376,505	68.9	82.7	82.2	73.3
Dallas, TX	8,845,390	911,902	7,933,488	6,233,540	5,920,033	313,507	67.0	79.3	78.6	70.5
Denver, CO	3,732,858	334,621	3,398,237	2,790,143	2,535,219	154,924	77.9	82.7	82.1	74.7
Los Angeles, CA	9,175,106	604,458	8,570,648	7,014,406	6,591,333	423,073	74.8	83.0	81.8	76.5

Note: CT = centralized, DT = decentralized, combined = CT and DT.

[1]No centralized offices.

Table 5. Mail Response Rates From Occupied Housing Units

(Percent. Based on FOSDIC tallies)

Region	Long (L)	Short (S)	Combined	Difference (S-L)
Total	80.07	81.60	81.31	1.52
Boston, MA	81.50	82.54	82.34	1.05
New York, NY	74.78	77.98	77.46	3.20
Philadelphia, PA	83.42	85.39	85.00	1.97
Detroit, MI	84.04	85.36	85.09	1.32
Chicago, IL	83.28	83.25	83.26	(0.03)
Kansas City, KS	86.12	87.47	87.15	1.35
Seattle, WA	79.34	81.73	81.32	2.39
Charlotte, NC	77.74	79.66	79.32	1.92
Atlanta, GA	76.86	77.75	77.60	0.89
Dallas, TX	73.58	77.16	76.51	3.57
Denver, CO	79.09	81.21	80.81	2.12
Los Angeles, CA	77.66	81.23	80.65	3.57

District office clerks prepared followup address registers for office use (the enumerators used the MAR's in followup 1 and followup registers in followup 2) by assembling no-carbon-required (NCR) copies of the D-102 master address register pages (on which the mail returns and other known changes had been noted), by ED, and entering pertinent information on a cover (from D-106) for each ED set. Based on the number of cases left in each ED, the field operations supervisor delineated the enumerator assignments and crew leader districts and decided which of the latter would be assigned to which field operations assistant(s) (FOA).

After the crew leaders had trained their enumerators and inducted (given further on-the-job training on the first workdays) those who might have problems with their assignments (in line with instructions in the D-553 [centralized] or D-554 [decentralized] Followup 1 Crew Leader's Manual), the enumerators proceeded with their rounds. The Followup Enumerator's Manual, form D-547 (centralized) and D-548 (decentralized), provided the necessary instructions; each enumerator also carried a kit containing much the same materials and supplies as in conventional areas (see list on p. 32).

The enumerators were instructed to plan each day's work by finding on their ED maps the approximate location of each nonresponse unit (identified by the lack of an entry in the check-in column (9) on their address registers) and arranging their routes accordingly. They selected the type of questionnaire to be used at each housing unit by referring to column 7 of the address register, which was marked with an "S" or an "L," denoting a "short" or a "long" form. After determining whether the unit was occupied, vacant, or nonexistent, the enumeration proceded accordingly, using English or Spanish-language household questionnaires, individual census reports (ICR's), D-15 supplementary questionnaires for American Indians, or other appropriate forms, as indicated.

At each *occupied* unit, the respondent was to be the householder (i.e., the household member who owned or rented the living quarters) or any other household member who was at least 15 years old. Where the respondent and the enumerator did not speak the same language, a school-age child who was a member of the household could be used to interpret, or the respondent could be offered a census guide in his or her language; the guides, form D-60, were printed in 32 different languages. In some areas, the Bureau had interpreters, sworn in as census agents, who accompained the enumerators on their rounds. The enumerator offered the D-31 Privacy Act Notice (see app. 5C for facsimile) to any prospective respondents concerned about their rights and responsibilities regarding the census. The wording on this form was similar to that on the questionnaire the household presumably had already received.

The 1980 houehold questionnaires contained space for enumerating seven persons; data for additional people were to be entered on one or more blank questionnaires of the same type (short or long) marked "Continuation" and identified with the

same serial number and codes as the original. If no one was at home at the time of the visit, the enumerator left a D-26 appointment record and returned at a later date or when arrangements had been made by telephone.

For each *vacant* unit, the housing data only (only for the items marked on the questionnaire with a double underscore; see facsimile in ch. 1, app. 1E) were to be collected from a knowledgeable person, such as a building agent or neighbor.

If, while enumerating the occupants of a housing unit, the census taker found there were 9 or more persons unrelated to the owner or renter, or a total of 10 or more unrelated persons— thus constituting noninstutional "group quarters" (see p. 95)— he or she was instructed to complete the questionnaire without getting housing data. (Group quarters were not included in the housing inventory.) The enumerator then wrote "Special Place" across the front of the questionnaire, and deleted the entry on the address register white page and added it to the yellow "special place" page.

Unless otherwise instructed, the census takers did not enumerate unlisted special places that they discovered on their rounds; rather, they entered their addresses on the special-place listing page in their address register, cancelled any corresponding entry on a regular address-register page, and entered identifying names, address, and codes on short-form questionnaires. They marked these cases as "missed special place" and turned them over to their crew leaders for routing to the district office's special-place operation (see p. 39 ff.).

If the enumerators discovered housing units that were listed in their address registers, they were instructed to add them and complete short or long-form questionnaires, determining the type of questionnaire by referring to a sample-type checkoff sheet at the back of each address register.

As they completed their visits, the enumerators entered the results in their address registers. In case of refusals or occupants' continued absence after three contact attempts, they collected "last resort" information (see p. 31). A significant problem in followup was that many enumerators knocked on doors, only to be told that the respondent had already completed a form. This sometimes was due to late mail returns, but more often to the fact that an address had been listed twice in the register. A returned questionnaire would be checked in for one of the listings, but the other listing would show no return and therefore require followup. Many district offices instituted special search operations to resolve these duplicate listings.

The enumerators also had to resolve cases where housing units had been merged or divided through remodeling, duplicate listings or duplicate questionnaires, mixups in names and apartment designations (particularly those that affected the composition of the sample) or rural route addresses, and housing units listed in the wrong census block or ED (or both).

On occasion, a prelist address register would list housing units simply as a "cluster" with an estimated number of units; for example, a group of vacation cabins. The cluster was represented by a circled area on the ED map and one serial number. Here, the enumerator was to visit the area during followup, identify the units, and by reference to the register entries determine which required further attention.

As the enumerators reported their progress and turned in completed questionnaires each day, the crew leaders would advise them about any late mail returns that the office had received, so that they could mark their address registers accordingly. Every Monday, or more often if so directed, the crew leaders reviewed the handed-in work for completeness and for justification for missing entries and "last resort" questionnaires. The crew leaders completed a form D-175, Enumerator Work Transmittal, to accompany each census taker's work returned to the district office; the field operations assistant also reviewed and initialed each transmittal on arrival. The crew leaders checked their enumerators' turned in work for possible "curbstoning" (making up the answers instead of actually interviewing a respondent). They selected five completed questionnaires from each assignment, telephoned or visited the households to verify the address and the names listed, and entered the results on form D-158, Record of Reinterview. In some of the centralized offices, clerks made the telephone contacts.

Followup 1 enumerators were expected to meet the following standards:

	Acceptable cases	
	Centralized	Decentralized
Expected rate per 8-hour day	14	16
To meet targeted wage, short forms or questionnaires for vacant units	12	14
Expected rate per week	70	80
Minimum allowable cases per week	50	60

Decentralized areas also had quality control (QC) crew leaders and enumerators, whose task was to review for acceptability the questionnaires that followup 1 enumerators turned in to their own crew leaders. Each QC enumerator, who was assigned to every two followup 1 crew leaders and paid on an hourly basis, was expected to handle 200 questionnaires a day. Duties involved the following: Sorting and counting the questionnaires; verifying the entries on the D-175 work transmittal forms; checking the questionnaires for refusals and last resort information; correcting or transcribing responses that might not pass subsequent electronic processing because the marks were smudged, writing was illegible, or the questionnaire was stained or damaged; verifying the entries on the corresponding address registers; and returning to the followup 1 crew leaders any "last resort" questionnaires that lacked sufficient information. Instructions for these QC operations appeared in the D-526 (enumerator's) and D-527 (crew leader's) manuals. (In 1970, the followup enumerators, rather than district office editors, reviewed the mail returns [see "Editing"] as well as telephoned or made personal visits to collect missing information, and the crew leaders performed the QC function.)

Between April 16, when followup 1 began officially, and May 13, when it was supposed to end, 79 percent of the reported workload had been completed. Only 9 of the 385 offices had finished by then, however. Of the remaining 376, 18 took less then 1 week more; 57, 1 to 2 weeks; 74, 2 to 3 weeks; 59, 3 to 4 weeks; 125, 4 to 8 weeks; and the remaining 43, over 8 weeks.

The population and housing counts achieved at the end of followup 1 were the ones used in the local review program (see p. 36).

Editing

Soon after the return flow of questionnaires began, the next step in district office processing, called editing, started. This consisted of having clerks review each questionnaire that had been received by mail to make certain the responses were relatively complete, to repair improper entries (e.g., ones that might be misread during subsequent electronic scanning because of intrusive or faint marks), and to enter certain codes by blackening FOSDIC circles in "For Census Use Only" boxes. Questionnaires that "passed" edit were considered complete and ready for shipment to a census processing center when the district office closed; questionnaires that "failed" edit became part of the workload for followup, in which missing information would be collected by telephone or personal visit. Editing involved the use of templates (form D-378, short form, or D-379, long form), which the clerks laid over the appropriate questionnaire pages. The templates contained holes or cut-out places, through which the respondents' entries could be seen, and printed instructions to the clerks about how the particular response was to be treated. The entire operation consisted of four phases, the first and third being quality-control checks, to be carried out between April 14 and May 16.

Pre-edit—Following instructions in the Edit Quality Control Manual, form D-513H, clerks selected a sample of questionnaires from each work unit, referring to a "start with-take every" table in which the sampling rate varied from 100 percent in small work units to 3 percent in large ones. The clerks then edited the sampled questionnaires according to the template instructions but made no marks on the questionnaires themselves; instead, they noted on a control record, form D-380, the action (if any) to be taken in each case. This record was used again in the verification phase to see whether particular questionnaires had been edited properly. Pre-edit covered *all* work units assigned to a given edit clerk until such a time as that clerk had at least five work units evaluated and found to be satisfactory. Thereafter, that clerk's work underwent a single, rather than a double, verification, and the pre-edit stage was skipped.

Edit—The major purpose of this operation was to determine whether the returned questionnaires met established standards for acceptability; those that did not were to be referred for telephone or personal-visit ("PV') followup. (The original standards described below were relaxed during the census to reduce the followup workload and expenditures.) Edit clerks reviewed and marked short- or long-form questionnaires (one type or the other, but not both at the same time) as assigned, following directions in their manuals, form D-513G, and the routine prescribed on their templates. (For item-by-item edit instructions, see ch. 12.) The clerks filled FOSDIC circles, as needed, in black pencil, but used purple-lead pencils to mark items requiring followup or to make other notations on the questionnaires. The clerks wrote the numbers of the items that required followup above the appropriate person and/or housing columns and tallied the number of items or points. Except for certain items, such as the household roster (population question 1) and the other coverage questions, H1 through H4, all of which counted as 10 points each, the remaining deficient items counted as 1 point each. Several situations also rated 10 points each; these included all information missing for one or more persons (the questionnaire was marked "POP") or for the housing unit (the questionnaire was marked "HOUSE"), or where there were two or more persons in the household unrelated to the householder (i.e., to the person listed in column 1 of the questionnaire). In the latter case, the questionnaire was marked "NONREL" and an enumerator was to determine whether the nonrelated persons might be occupying a separate housing unit. Any short form with 4 or more points, or a long form with 9 or more, was to be marked with a "T" for telephone followup. In mid-May, to speed completion of the census, the acceptance rule was relaxed, so that an "error" in the household roster—i.e., missing or inconsistent information—cost 20 points, and a long-form questionnaire was referred for followup only if it had 20 points tallied. (The short-form threshold remained at 4 points.) All forms with fewer points assessed were marked "C" for "complete." The work units then were boxed for the next phase, with the "T" cases, sorted by ED, in plastic bags, and the "C" cases at the bottom of the box.

Verification—In this quality-control phase, clerks located the questionnaires that had undergone pre-edit by matching the ED and serial numbers on the D-380 Record of Edit Quality Control with those on the questionnaires. Using green pencils (purple had been used in the edit) for remarks, the clerks compared the pre-edit entries on the D-380 record with what the edit clerk had done. They either agreed or disagreed with the pre-edit or edit decisions, and corrected the questionnaires as necessary. The results were entered on the D-380 record. Verification allowed one edit error for each pre-edited short-form questionnaire and four for each pre-edited long form. If the total number of errors for the work unit was greater than the allowable number, the work unit was rejected and the entire unit (except for the questionnaires already edited by the quality-control clerks) had to be re-edited; otherwise, the unit was accepted.

The verification clerks sampled and edited (using green pencils) work units not subjected to pre-edit in the same manner as in the pre-edit phase, except that now the check was dependent (the edit results were known). Again, the results were entered on a D-380 record and the same allowances were made in accepting or rejecting units.

Re-edit—Another set of clerks went over the rejected work units, making necessary changes, again sorting by ED the questionnaires for followup 2 and returning the finished work to the edit control clerk who monitored the work units' movements.

Production standards for clerical editing were as follows.

	Per hour		Per 8-hour day	
	Minimum	Expected	Minimum	Expected
Edit or re-edit:				
Short-form questionnaires	22	25	175	201
Long-form questionnaires	6	7	44	51
Pre-edit or verify (dependent):				
Short-form work units			6	8
Long-form work units			3	5
Verify pre-edited work:				
Short-form work units			7	10
Long-form work units			5	7

Clerks were to meet the accuracy standards (i.e., no need for re-editing) on two out of three short-form work units or four out of five long-form units, as well as conform with the production standards. Failure to do so was to lead to remedial action, including retraining and/or recommending the clerks' release.

Roughly half of the district offices began editing at least 2 weeks late, mainly because check-in and the H-4 edit were still incomplete. Only 53 (13.8 percent) of the district offices finished short-form edit on schedule, and 48 (12.5 percent) had the long-form edit completed on time. Although there were few major operational problems involved in editing, its procedures required a large number of clarifications and minor revisions while the work was going on.

Telephone Followup

Clerks in the centralized offices and enumerators from the decentralized offices, the latter usually working at home, called "failed-edit" (questionnaire marked "T") households that reported telephone numbers or for which listings could be found in local directories. They also contacted identifiable households that refused information in followup 1 and households for which there appeared to be duplicate questionnaires. Guided by instructions in their manuals (D-513J for clerks and D-557 for enumerators in centralized offices, and D-558 for decentralized enumerators), the clerks/enumerators obtained as much missing information as they could. If, after several attempts, a clerk could not contact the household, the questionnaire was marked "PV" (personal visit) and assigned to an enumerator. In decentralized areas, the enumerator simply set such a case aside for a visit. In late May, to speed both telephone and enumerator followup, the rules were changes so that failed edit questionnaires marked "T" were considered complete (and marked "C") unless they had coverage deficiencies—that is, discrepancies or missing information in the household roster or in housing questions H1, H2, and H3. These latter situations still were to be followed up, as were instances where a respondent continued to report, upon telephone contact, more housing units (H4) at the address than appeared in the address register. Such cases were marked "PV" and assigned to an enumerator if not resolved by telephone. The clerks also attempted to contact persons whose names had been found in the nonhousehold sources program (see p. 29) but who were not listed on the household questionnaires for their given addresses.

The telephone clerks prepared for each questionnaire a form D-382, Telephone Call Record, on which they entered the times and results of every followup call. (The Nonhousehold Sources Record, form D-434, contained its own call record for the clerks to annotate.) The clerks were instructed not to leave messages on answering machines, but to keep calling, 6 days a week and two shifts a day—8:30 a.m. to 3:00 p.m. (day shift), or 3:00 p.m. to 9:30 p.m. (evening shift). In general, a case would be passed on for a personal visit after a total of five unsuccessful attempts during both shifts to contact a respondent by telephone. Clerks on either shift were expected to complete, and not simply pass on for personal visit, 27 (minimum) or 31 (expected) cases each day.

Quality-control (QC) clerks, following instructions in their manual, D-513K, monitored the number of questionnaires processed by telephone each day and reviewed the results to see that all failed-edit problems had been resolved or referred. QC clerks on the day shift reviewed work finished the previous evening, and QC clerks on the evening shift reviewed work completed that day. Their production standard was 325 (minimum) and 374 (expected) questionnaires per clerk per shift. Any questionnaires marked "C" (complete) that still had unresolved items were to be rejected, counted, remarked "T," and returned to the telephone unit unless they fell outside the following tolerances: Short-form questionnaires assigned for personal visit ("PV') that had less than 4 unresolved edit marks were to be marked "C," as were all long-form questionnaires that had less that 20. QC results were entered daily on a form D-383, Telephone Followup Quality Control Record.

All clerks and enumerators were instructed to give priority to cases in work units marked "End of ED," so that processing of the ED in question, otherwise complete, could proceed without further delay. Any "End of ED" questionnaire marked "C" but rejected in the QC operation was referred to an enumerator rather than back to the telephone unit.

The telephone clerks received fairly extensive training, as this was a new operation to them, although some had worked in the telephone assistance program before.

Merge

"Merge" was a clerical operation designed to accomplish two tasks: (1) to ensure that only one questionnaire (with the exception of continuation forms) was on file for each housing unit listed in the master address register, and (2) to guarantee that the population entries in that register matched those on the questionnaire. Merge took place once followup-1 editing and telephone followup were completed, and was scheduled for the period May 20 through 28 for decentralized district offices and May 27 through June 12 in the centralized ones (after telephone followup). Manual D-513L, Merge, contained instructions.

Prior to the merge process, the check-in clerks assisted in preparing (1) a form D-384, Record of Questionnaire Followup, for each ED, listing all of the housing units that had been reported vacant or whose entries had been deleted, except those identified as "usual home elsewhere," "duplicate," or "transfer," and (2) a form D-160, Unit Status Review, for each of the listed units, so that enumerators could verify their status. Subsequently, the merge and assignment clerks prepared another form D-384 for each ED listing any other followup action (failed edit, missing questionnaire, nonhousehold source check, etc.).

Inasmuch as the merge operation could not begin until followup 1 had been completed, few district offices were able to start the merge on time. As of May 31, only 122 (41 percent) of the decentralized offices had started, with less than 10 percent of all the ED's having been merged. The record for centralized offices was slightly better, with 52 (60 percent) having begun by June 4; however, less than 40 percent of the centralized ED's had been merged by the scheduled June 12 completion date.

Followup 2

Followup 2 was the second part of field followup, and was scheduled as follows.

- May 22 through May 30 (decentralized), May 30 through June 13 (centralized): Enumerators conduct the unit status review (also called "vacancy/delete check").
- June 3 through June 13 (decentralized), June 17 through July 7 (centralized): Enumerators contact by telephone (decentralized only) or visit "failed-edit" households that could not be reached by telephone and enumerate (1) those for which questionnaires were missing, (2) persons identified from nonhousehold source lists, and (3) households where interviews were refused during followup 1. They also recanvass areas for which the local review program revealed significant differences between the housing and group-quarters counts at the end of followup 1 and local officials' records—differences that could not be resolved clerically in the district office.

Preparations—As with followup 1, the district office supervisors had to prepare maps and select and train crew leaders and enumerators, based on the expected workload. The production standard that governed was—

	Cases per day	
	Decentralized	Centralized
Unit status review	18	19
Balance of followup 2:		
1/6-sample areas	23	15
3/6-sample areas	21	—

An ideal assignment for one enumerator was one ED (80 cases).

Crew leaders distributed the D-384 case lists to their enumerators to use with their address registers; D-384 copies were used to monitor assignments and progress. In general, followup-2 crew leaders and enumerators were chosen from those who worked in followup 1, so followup-2 training was minimal except for those who were new to the census and needed complete instruction.

Unit status review—During this followup-2 phase (also known as "vacancy/ delete check"), the enumerators concentrated on visiting each unit shown on their D-384 case lists and on D-160 forms as "vacant" or "deleted—nonexistent" to verify the correctness of that classification as of April 1. In doing so, they used the instructions in their manuals (D-557 [centralized] or D-558 [decentralized]). If the housing unit was vacant at the time of the visit, the enumerator verified the unit's April 1 status with some knowledgeable person. A "vacant" unit had to be unoccupied, intended as a "usual residence," and also meet one of the following criteria: (1) for rent or for sale; (2) awaiting occupancy; (3) under construction to the point where exterior windows and doors were installed and final floors were in place; (4) being converted to fewer or more units; (5) to be used for nonresidential purposes, but such conversion had not yet taken place; (6) used for furniture storage; or (7) used only on weekends or seasonally. A nonexistent unit was one that was not only unoccupied but also was (1) open to the elements; (2) in the process of being demolished; (3) condemned, and so marked; (4) being used for nonresidential purposes (other than storing household furniture); or (5) under construction, but not to the point where exterior windows and doors were installed and final floors were in place.

If the unit in question was occupied at the time of the enumerator's visit, he or she determined first whether or not the occupants lived there on April 1. If so, the appropriate household questionnaire (short- or long-form) was to be completed. If the enumerator encountered some uncertain situation, such as an undesignated unit in a multiunit structure ("Which apartment is this?"), or identified a special place, he/she marked the D-160 form "incomplete" and reported the circumstances to the crew leader. The address registers were annotated to reflect status changes, added population, and the like.

Because followup 2 started late in most district offices (only 17 of 298 decentralized offices (including the 12 with two procedures) and 12 of 87 centralized offices were able to begin on time), completion of unit status review lagged. On June 19, Bureau headquarters decided that this operation could be canceled in areas with high concentrations of seasonal housing units. While half of the Bureau's 12 regions had already completed 60 to 80 percent of their review by this time, the change meant significant savings in the other 6 regions. As enumerators not on hourly rates earned $2.00 (decentralized)/$2.25 (centralized) for each D-160 form, plus $2.40/$2.50 for a short form and $4.05/$4.50 for a long-form questionnaire, the unit cost in resort and innercity areas was high. Unit status review involved followup of 8.4 million "nonexistent" or "vacant" units, at a cost of $36.3 million. Approximately 867,000 (10 percent) were found to be misclassified. Of these, some 159,500 nonexistent and 533,500 vacant units were found to be occupied; they, together with 1,724,000 persons, were added to the census, as were 175,000 "nonexistent" units reclassified as vacant. On the other hand, 507,000 of the units originally enumerated as vacant were reclassified as nonexistent and removed from the census.

Recanvass—In 137 decentralized offices, deficiencies in the prelist operation (see ch. 3) were discovered after Census Day, e.g., no householders' names, or vague or missing unit locations in the address registers. Because of concerns about coverage in such areas, some of the prelisted ED's were ordered to be recanvassed during unit status review. This meant going from door to door, verifying every listing in the register and interviewing wherever necessary. Except for clusters of housing units that still needed to be listed and enumerated individually, this operation was discontinued in August, not only because of budget constraints but because it was delaying completion of followup 2. The recanvass added about 115,000 housing units (0.9 percent) and 223,000 persons to the census at a cost of $10.3 million.

Nonhousehold sources check—This program, the objective of which was to reduce the differential undercoverage of minority populations, was carried out in urban areas where there were large concentrations of such groups. In general, members of the targeted population could have some or all of the following characteristics: language barriers, residence in hard-to-enumerate areas, unemployed, young and male, transient, and/or in the Armed Forces.

In 1979, the Bureau secured lists of names and addresses from the U.S. Immigration and Naturalization Service (INS), the New York City public-assistance files, and departments of motor vehicles (DMV) in 43 States and the District of Columbia. These lists were processed electronically to eliminate duplicates, assign

geographic codes to the remaining records, and to further screen the latter for usefulness. Those in census tracts that were thought to have low proportions of minority populations (based on precensus estimates) were declared out of scope, as were those with addresses for structures with 10 or more units (where matching names was difficult). The resultant list of 6.8 million records, in the form of a separate D-434, Nonhousehold Source Record, for each person, was distributed among the district offices, where clerks (using the D-513M Coverage Improvement Searches Manual) matched the cases to the census returns after followup 1. Where the person could not be found on a completed household questionnaire, the names and some characteristics of all people enumerated on the questionnaire for that address were added to the D-434. The form was given to a telephone clerk (centralized) or an enumerator (decentralized) for followup. Approximately 1.8 million D-434's were referred for followup, representing about one-quarter of the original 6.8 million cases. (Cases already in followup or not locatable were not referred.)

Wherever possible, the nonhousehold sources check was to be done by telephone. The interviewer was instructed not only to inquire about the named person and whether the respondent knew him or her, but also to verify that the household roster shown on the form was correct as of Census Day. If not, corrections were to be made and any missing information collected. As noted under "Telephone Followup" above, cases originally assigned to telephone clerks but that could not be satisfied by telephone were referred to enumerators. Where the latter found the housing units in question to be vacant or nonexistent, they so marked the forms and returned them without further action. Where the visit coincided with one for "failed-edit" followup, both it and the check were made at the same time. In August, personal-visit followup of nonhousehold sources cases was discontinued in decentralized areas.

Preliminary analysis of the results indicated that approximately 127,000 persons were added to the census through this check. Of these, about 82,000, or about 1.1 percent of the 6.8-million total, were on the source lists; the other 45,000 were picked up in the process. Two-thirds of the gains were in centralized areas, and the INS and public-assistance lists were more productive than those from automobile and drivers' licenses. Costs were estimated at $6.3 million.

Failed-edit followup—This second phase of followup 2 was devoted primarily to personal-visit resolution of failed-edit cases that could not be handled by telephone. It also covered virtually every situation, including nonresponse cases and local-review recanvasses, that could not be resolved in the same manner. Provided with the questionnaires that had failed clerical editing, the enumerators were instructed to verify the household rosters, complete ICR's (form D-20, Individual Census Report) for persons they found who lived elsewhere but had no one at home to respond for them, obtain missing information, and the like. If the listed occupants had moved since Census Day, the enumerator was to collect missing housing data only and not enumerate the current occupants (unless they had not been counted before; in that case, they were to be enumerated on a continuation questionnaire). Where there were duplicate questionnaires, the enumerator determined which one was correct, marked the duplicate(s) "Void," adjusted the records, and reported any other necessary corrections, such as a wrong questionnaire serial number. The followup-2 enumerator also was to visit households that had refused to be enumerated and obtain as much information as possible—at least as much as required for a "last resort" case (see p. 66). Last resort information from neighbors and observation also was acceptable for units where a respondent could not be found in three visits. If the personal-visit followup turned up a case where the unit was listed in the wrong census block or ED, the enumerator was to correct the address register and, in the latter case, give the questionnaire to the crew leader for transfer.

Only 2.2 percent of the decentralized and 20.5 percent of the centralized workload were completed by their respective June 13 and July 7 deadlines. In August, field and telephone followup of failed-edit cases was limited to just those in which there was a discrepancy or no answer for coverage question H-4 (number of living quarters at the address) in structures with less than 10 units. Further, where a district office had succeeded in reducing the number of nonresponse cases to less than 2 percent of the total, followup of such cases was restricted to ED's where the nonresponse rate exceeded 5 percent; elsewhere, it was permitted to submit "closeout" questionnaires for nonresponse units. Where there was followup, at least the total population for the unit had to be obtained. (On "closeout" questionnaires, clerks filled the appropriate serial-number and coding circles so that during processing, the computer would automatically assign characteristics from similar housing units and households. See chs. 6 and 12.)

With the many changes, the only aspect of failed-edit followup that could be evaluated had to do with question H-4. The office clerks, some of the respondents, and presumably enumerators as well, all had trouble editing or interpreting this item. A review of questionnaires that failed the H-4 edit concluded that followup was required for about 1.94 million structures, of which some 1.23 million had been reported originally as single units. Followup added about 93,000 units to the census. Costs may have ranged as high as $7.5 million for this component.

Followup-2 enumerators in decentralized areas were expected to complete at least 23 acceptable cases (or 18 where unit status review was involved—and less if the enumerator had to recanvass the ED) per 8-hour day; production of less than 90 cases in a 40-hour week was considered marginal. The standard in centralized areas was 15 acceptable cases (or 19 unit status review cases) per 8-hour day, or at least 75 acceptable cases per 40-hour week; less than 50 a week could lead to release. Because of the variety of situations encountered in the second phase of followup 2, most enumerators were paid at hourly rates and authorized 8 hours of overtime per week.

Followup 2 was more complex than followup 1, and consequently more difficult to evaluate and summarize. In general, followup 2 dealt with whatever cases were not resolved up to that point. In some instances, followup 1 had not been completed, and the remaining workload was simply transferred to follow-up 2. Here and elsewhere, the followup 2 workload almost always proved to be higher than expected, with no uniform "mix" of the various tasks—so much unit status review, failed-edit followup, nonhousehold sources checks, local review, etc.—to be done. Ideally, funds and staff could have been increased to speed completion; in practice, money was short and sufficient staff was not even available in many places. With rigid deadlines ahead for processing the data (to make certain the Bureau met

the Dec. 31, 1980, mandated time for delivering the apportionment counts), some field operations were curtailed or simplified, as noted above, to save both time and money and to make maximum use of the staff that was available. Some offices had high mail-return rates, good cooperation from respondents, and ample work pools to draw from; these were able to meet schedules. Others were less fortunate, and even with budgetary assistance could not complete followup 2 and other work until very late in 1980 (see p. 38 and app. 5A for closing dates).

"Last Resort" Information

Enumerators who were unable to contact a nonresponse household after three visits, or where the household refused to provide information, were instructed to mark the unit's address-register listing and questionnaire "Last resort," and attempt to get whatever data they could by observation or by asking neighbors, landlords, building superintendents, and the like.

The following questionnaire entries were required for occupied units:

- The name of each person and at least three of four population items—relationship to householder, sex, race (required on short-form questionnaires used on Indian reservations), and marital status.
- All of the following items for the housing unit—type of structure and number of units, access, plumbing facilities, and, for one-family houses, acreage and presence of a commercial establishment.
- In the "For Census Use Only" box—block number, serial number, type of unit or quarters, and total persons.

The same housing and "census use only" items applied to vacant units or where the occupants had their usual home(s) elsewhere, except that the enumerator also had to identify the type of vacancy—year-round or seasonal use, status (for rent, for sale, etc.), and whether boarded up.

Crew leaders were to review "last resort" questionnaires carefully and visit the housing units they covered, in part to monitor the enumerators' use of this technique as a shortcut to completing their work. An excessive number of "last resort" cases could lead to rejection of entire assignments.

Variations From Mail Procedures

As noted elsewhere in this history, address registers for mail areas were compiled from two basic sources—commercial mailing lists and prelisting. For the former, the TAR's and household questionnaire labels were printed out by computer (which also assigned geographic codes and questionnaire serial numbers). The completeness of the TAR address coverage was checked both by the Postal Service and through a Bureau operation called "precanvass" (see ch. 3). To extend the mailout/mailback procedure to city-delivery type addresses beyond the TAR areas, Bureau employees traveled assigned areas and entered ("prelisted") in registers the housing-unit addresses they encountered. Questionnaires addressed for mailing on the basis of those registers also were checked by the Postal Service, but the areas were not subjected to a precanvass. To make the boundaries between TAR and prelist areas as simple as possible and to avoid splitting ED's and other assignments between two types of address registers, some TAR areas were designated for prelisting, and vice versa. Generally, this separation worked well; however, in one part of the country, a gap was left between the area covered by the TAR and the area covered by prelist. The district offices in the Houston, TX, area reported that some of their address registers contained no addresses or only a partial listing of addresses. It was discovered that about 26,000 addresses originally scheduled to be covered by TAR had not been printed in the address registers. Since these registers were already bound, supplementary registers were printed containing the addresses left out of the originals. The questionnaires returned in subsequent census operations were checked in by both serial number and address, rather than by serial number alone.

Elsewhere in the country, it was discovered that some housing units prelisted by house number and street name did not have carrier delivery; rather, the occupants picked up their mail at the post office. In these cases, where mail was returned from the Postal Service's casing check marked "Undeliverable," and elsewhere where mail coverage appeared to be poor (represented by large numbers of undeliverable questionnaires or "blue cards" (post office reports of missing addresses), the district offices took the relevant address registers to the post offices and added lockbox numbers or conducted what was called "update/leave." This meant assigning enumerators, paid on an hourly basis, to canvass ED's beginning in late March and deliver the appropriate household questionnaire (short- or long-form, as indicated on the address register) to each listed or unlisted housing unit that had not received one already. Where an unlisted unit was found, the enumerator added it to the register and assigned the proper geographic code and questionnaire serial number. The update/leave cases seemed to be concentrated in south central Missouri, where the housing units in three counties—around 27,000 in all—had to be enumerated this way. The number of cases nationally is not known.

The Bureau had a coverage-improvement experiment called "list/leave" during the census, in which certain ED's were designated where the housing unit would not receive a mailed-out questionniare. Instead, the enumerator would canvass the ED, list the housing unit in his/her address register, and leave the appropriate questionnaire for the householder to complete and mail in. This experiment is described in Chapter 9, "Research, Evaluation, and Experimentation Program."

CONVENTIONAL CENSUS PROCEDURES

Introduction

In late January 1980, the Bureau opened 36 district offices in areas where the conventional (door-to-door) enumeration was to be used because difficult terrain and sparse settlement made taking the census by mail impractical. Twelve of the district offices were "two-procedure" offices, where parts of their areas were conventional and parts covered by the decentralized mail procedure (see p. 5 and the list of district offices in app. 5A).[11]

[11]These 12 offices each had one manager and certain combined administrative functions, but for operational purposes were divided in two, with separate materials, supplies, and procedures. The 1980 census plan was to enumerate all SMSA's and adjacent counties by mail. In some areas, parts remained so rural in nature that they could not be enumerated adequately by mail; hence, the need for two-procedure district offices.

All participated in the various precensus activities—publicity, hiring and training, preparations for the special-place operation, and the like— detailed elsewhere in this chapter and outlined in the staffing and operations calendar (see app. 5D).

Before Census Day, the field operations supervisors (FOS's) in the conventional offices had to determine all field assignments and make them as homogeneous and compact as possible. This was done first by outlining them on the district office master maps, based on the number of crew leaders and enumerators authorized. Ideally, each crew leader was to supervise 11 contiguous enumerator assignments (EA's), taking into account geographic barriers or social and economic factors that might dictate their configuration. Each FOS had one or more field operations assistants (FOA's) to whom groups of crew leader districts were assigned. The EA's were made up of one or more ED's (enumeration districts) that the Geography Branch in the Data Preparation Division had already delineated. To the extent possible, each conventional ED covered an area containing approximately 275 housing units; Indian reservation "N" ED's each had about 70 units, and related "A" ED's (containing subreservation and/or trust lands), about 140 (see p. 52 for details).

After the crew leaders were hired and trained in late February, they had specific preparatory work to do. One of the first tasks was called "advance listing." Here, they visited each of the ED's assigned to them and listed 24 housing units per ED. These lists were kept in the office, where they subsequently were matched against the enumerators' listings to see whether any units had been missed. Another early task for the crew leaders was to identify any ED's that might be too large for one enumerator to handle. They also located special places, such as motels, campgrounds, institutions, etc., and made arrangements for them to be canvassed.

Just before Census Day (April 1), mail carriers left at every housing unit, and in every post office box for a household, an unaddressed short-form household questionnaire, form D-13. This questionnaire, often referred to as an ACR (advance census report), was identical in form and content to the short-form questionnaire used in mail areas, but it had no return envelope. Instead, a message on the cover asked the householder to answer questions and hold the form for an enumerator's visit.

The Enumerator's Work

After training and assignment to one or more ED's, each enumerator received the following materials in a portfolio.

Form	Item
D-104	Address register for each assigned ED Map of the ED (in an envelope attached to the inside back cover of the address register)
BC-110	An identification card and its holder
D-1	Blank short-form household questionnaires (for use where the D-13 ACR was not available at the households)
D-1S	Spanish-language short-form questionnaires (if necessary)
D-2S	Spanish-language long-form questionnaires (if necessary)
D-15	Supplementary short-form household questionnaires
D-20	Individual census reports, with envelopes, for use where needed
D-26	Census appointment record (asking for an appointment where no one was at home)
D-27	Introduction for Spanish-Speaking Respondents
D-31	Privacy Act Notice (handed to each householder at the time of the visit)[12]
D-353	Special-place shuttle cards (as assigned)
D-549	Conventional Enumerator's Manual
D-549A	Indian Supplement to Enumerator Manual (where used)
D-561	Questionnaire Reference Book
D-561A	Indian Questionnaire Reference Book (where used)
D-707	Post-Enumeration Post Office Check (address cards)
	Black-lead pencils with erasers White correction dots (for covering erroneous marks in FOSDIC answer circles)

The address register was blank except for a serial number preprinted on each line of each numbered white page and for yellow pages listing special places already identified before the census (see p. 40). The enumerator's task was to search systematically for every housing unit and special place inside the boundaries shown on the ED map, following a prescribed path of travel so that no living quarters would be missed and the sample of units (1 in 6 or 3 in 6, depending on the specifications, to be enumerated on the long-form questionnaire) would be selected consistently. The enumerator also was to spot and number each living quarters on the map, and update the map, adding and correcting road names and other pertinent information as needed. (See fig. 7).

Figure 7. Map Entries

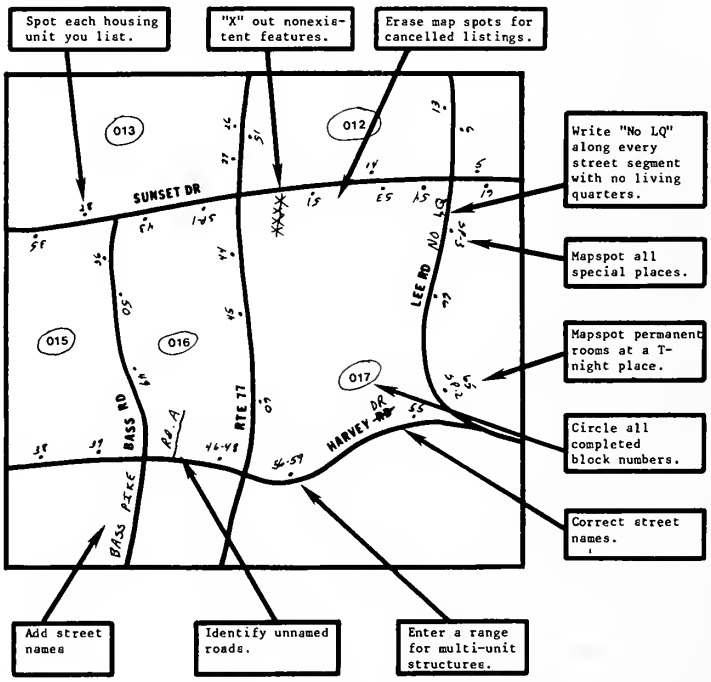

Each housing unit, occupied or vacant, was to be listed on the white pages of the register; special places not already listed, when encountered, were entered on the yellow pages specified for that purpose. (The census-taker did not enumerate these places unless instructed to do so, see p. 41.) In multiunit structures and mobile home parks, apartments or other living quarters

[12]The Privacy Act of 1974 required all Federal agencies that collect information about individuals to advise individuals the authority under which the information was being gathered, the uses to which it would be put, whether response was mandatory, and the effect of not responding.

were to be listed in alphabetic or numeric order, or by location if not otherwise marked.

At each *occupied* housing unit, the enumerator asked whether the ACR was ready to be picked up. If so, he/she reviewed it for completeness and collected any missing information; if not, it was necessary to conduct the interview from the beginning. If the unit was designated for the sample, the enumerator copied (then or later) the 100-percent information from the ACR onto a long-form questionnaire and asked the remaining questions. In all other respects, including the handling of *vacant* units, the same procedures applied as in interviewing in mail-census areas (see pp. 25 and 26 for details). On American Indian reservations, there were supplementary questionnaires to be administered as well (see p. 52 ff.).

Post-Enumeration Post Office Check (PEPOC)

After enumerating each housing unit, whether vacant or occupied, the census-taker filled out a form D-707 white card (see fig. 8) for the PEPOC for every unit that had a suitable mailing address, such as a house number and street or a household name and a rural route and box number, together with a post office name and ZIP Code. These cards were to be checked against the address register to make certain that all entries had cards, and then turned in, in serial order, to the crew leader during final review. In May, the district office staffs sorted the cards by ZIP Code and forwarded them to the appropriate local post offices for a check against carrier route records to see whether any residential delivery addresses had been missed. (The PEPOC was carried out only in conventional census areas, as these did not have any precensus post office checks like the ones in the mail census areas that detected and reported missing addresses.)

At the post offices, the carriers compared the white PEPOC cards with their route records and filled out a D-701 "Post Office Report of Missing Delivery" blue card for each address not represented by a white PEPOC card. The blue cards then were sent to the census district offices, where clerks identified the correct ED's, compared the blue card reports with the address register listings, and added any blue-card addresses not found to the registers for followup. Likewise, the Postal Service returned all the white PEPOC cards, noting on them any differences from their own records. The district office clerks, following instructions in their D-532H manuals, processed the blue cards only. They compared them with the address registers and added any blue card address not found.

The post offices submitted about 148,000 blue cards. These resulted in the addition to the census of about 50,200 housing units (1.2 percent of all units in conventional areas), of which 40,800 were estimated to have been occupied. Reported costs were $690,000.

Quality and Coverage Control

Quality edit—In late April, clerks began sampling the turned-in questionnaires to determine whether they were acceptable for further processing. In this quality-control (QC) operation, for which there was a separate manual, D-532A, the clerks systematically sampled each ED's questionnaires according to a set table in which the sampling rate ranged from 2 percent in a very large ED (440 questionnaires) to 100 percent in a very small ED (up to 15 questionnaires). They then examined each return, using templates that contained item-by-item instructions for editing, i.e., checking the responses for completeness. They marked any item that did not have an acceptable answer; any short-form questionnaire that had 4 or more marks failed edit (FE), as did any long-form return with 10 or more marks. Questionnaires that passed were returned to the bins, while the FE cases were assigned for followup. In most cases, if there were two or more FE cases for one ED, all of the questionnaires for that ED had to go through what was called "supplemental edit," an operation that repeated the QC edit but bypassed ED's and questionnaires that had been found acceptable during the original QC edit. Again, any that failed were set aside for field followup. While editing, the clerks repaired the questionnaires and any

Figure 8. PEPOC Address Card

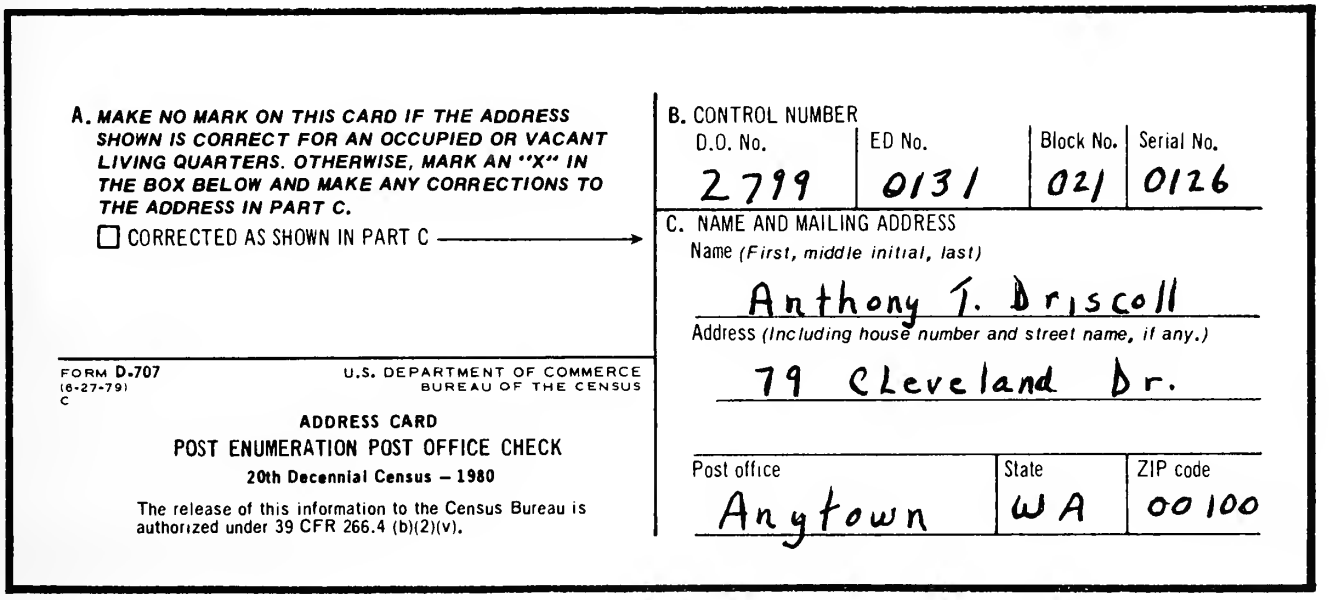
A. MAKE NO MARK ON THIS CARD IF THE ADDRESS SHOWN IS CORRECT FOR AN OCCUPIED OR VACANT LIVING QUARTERS. OTHERWISE, MARK AN "X" IN THE BOX BELOW AND MAKE ANY CORRECTIONS TO THE ADDRESS IN PART C.

☐ CORRECTED AS SHOWN IN PART C →

FORM D-707 (6-27-79) C

U.S. DEPARTMENT OF COMMERCE BUREAU OF THE CENSUS

ADDRESS CARD

POST ENUMERATION POST OFFICE CHECK

20th Decennial Census – 1980

The release of this information to the Census Bureau is authorized under 39 CFR 266.4 (b)(2)(v).

B. CONTROL NUMBER

D.O. No.	ED No.	Block No.	Serial No.
2799	0131	021	0126

C. NAME AND MAILING ADDRESS

Name (First, middle initial, last)

Anthony T. Driscoll

Address (Including house number and street name, if any.)

79 Cleveland Dr.

Post office	State	ZIP code
Anytown	WA	00100

marks that might cause the entries to be misread later during electronic data processing, transcribed or coded (by blackening the appropriate circles) entries as necessary, or even copied the information onto fresh questionnaires when too much repair work was required.

Coverage check—Following the QC edit, the clerks compared the advance listing (form D-169) of 24 addresses for each ED that the crew leaders had compiled before the census (see p. 32) with the address registers (form D-104) the enumerators had turned in. The clerks followed detailed instructions in a manual, D-532D, that explained how to adjudicate doubtful matches. If the enumerator had missed 2 or more of the 24 addresses in a given ED, the missing addresses were added to the register, which then was sent back to the field for recanvassing during followup.

Unit status review—During the regular enumeration, the enumerators indicated vacant units in the address register by entering a zero in register column 10. These units might have been misclassified due to the housing unit's appearance, enumerator error, or inaccurate information provided by a neighbor. During the unit status review operation (also known as the vacancy/delete check), clerks listed on a separate form D-160, Unit Status Review, each unit marked "0" in column 10 except ones identified as "usual home elsewhere." During followup (see below), an enumerator would visit each of these units to verify or correct the original classification. The relevant manual was form D-532E. For results, see p. 29.

Sample tolerance check—Since many of the estimates from census data are based on the additional information obtained from long-form questionnaires, it was important that the sample of households and housing units enumerated on long forms be accurate and representative of the whole. During the regular enumeration, the census-takers were supposed to list and enumerate housing units according to the sampling pattern printed in their address registers. During the sample tolerance check operation, clerks totalled the number of persons and housing units listed on the address register pages by short- and long-form questionnaires separately and combined. They then compared the actual population with an estimate based on the number of persons enumerated on long forms. If the difference was significant, the ED was resampled. This meant that some households enumerated on long forms would have to be shifted to short forms and vice versa. To do this, clerks copied long-form information onto short-form questionnaires, but for the reverse situation, they transcribed the short-form information—all they had—onto long forms that then were assigned for followup. The clerks' manual was form D-532F.

Merge—The next operation was called "merge"; in it, the clerks made certain that every completed and failed-edit (FE) questionnaire was accounted for, in serial-number order. They then matched the completed questionnaires against the address registers to identify any missing or duplicate returns, and listed each FE, missing, and duplicate case on form D-384, Record of Questionnaire Followup. The clerks' manual was form D-532G.

Followup

"Followup" was a field operation in which the best crew leaders and enumerators involved in the regular enumeration were retained, and others hired, to resolve a variety of deficiencies and discrepancies found during office processing. Where possible, the followup enumerators' assignments were shifted so they did not go over their own previous work.

Followup began as soon as a sufficient workload was available. For planning purposes, the number of assignments was based first on a completion rate estimated during the regular enumeration and then on subsequent experience and anticipated needs. The field operations supervisor (FOS) grouped contiguous ED's to form enumerator assignments (EA's) of—ideally—120 cases, with a maximum of 150 cases. Each crew leader, guided by the D-552 manual for the purpose, was to supervise 11 EA's, and the field operations assistants (FOA's) had oversight of groups of crew leaders as needed, as in the regular enumeration. The FOA's trained crew leaders and provided them with training kits for themselves and their enumerators; persons who had not had crew leader or enumerator training earlier received it now. The FOS obtained incomplete questionnaires, address registers, and other materials for each ED from the central bin files on a flow basis, and distributed them to the crew leaders—usually at their training sites, tracking the assignments on a form D-384, Record of Questionnaire Followup. A senior office clerk monitored and adjusted the EA's as needed, and took care of payroll and progress reporting as instructed in the D-529B, Followup Assignment Control Manual.

The enumerators' responsibility was to collect missing information. If an ED had failed the coverage check (see above), he/she had to recanvass it. This meant traveling the entire ED as prescribed for the regular enumeration (see p. 32), listing and enumerating any units not found originally. At the same time, the census-taker resolved questions pertaining to specific households or housing units. If the ED had passed the coverage edit, of course, the enumerator visited or telephoned only designed units. The situations to be resolved could be any one, or a combination, of the following:

- Questionnaires that failed quality-control edits—i.e., those that had more than the allowed deficiencies.
- Units that were unclassified, classified originally as vacant, or the entries for which had been deleted from the address register had to be revisited to make certain the classification was correct. If not, the unit and its occupants were enumerated.
- Questionnaires checked in on the address register but subsequently could not be located in the office.
- Housing units that had multiple questionnaires (presumed duplicates) that differed from each other, to see which was correct.
- Cases reported as refusals during the regular enumeration.
- Resampled ED's, where certain short-form households had to be converted to long-form, and the sample information was needed.
- The population and housing counts or the ED splits revealed geographic problems, and units needed to be located and assigned to their proper blocks and ED's.
- Discrepancies between the district office's preliminary counts and those claimed by local officials during their review that could not be resolved clerically by reference to the address registers and comparison with local records. These cases

generally involved allegations that the census had overlooked specific blocks or structures.

- Units the post offices reported as missed (see PEPOC, p.33) and not found in the subsequent clerical reconciliation in the district office.

The questionnaires and information from the followup operation returned to the district offices went through much the same processing as in the regular enumeration, ending with the population and housing count update. The update continued, with further referrals to the field as necessary, until the regional center's diary reported that all ED's were "balanced," i.e., the totals appeared to be correct and internally consistent.

OPERATIONS COMMON TO ALL DISTRICT OFFICES

Office and Field Separations

Beginning in June in conventional areas, after most of the PEPOC corrections had been made and before followup started, and in July (or later) toward the end of followup 1 in mail areas, the district offices had to make certain that all ED's and their address registers reflected the proper geography for Census Day (by extension, that each questionnaire was geographically allocated to its proper ED). Each ED had to be assigned to, and all of its data tabulated for, a specific governmental jurisdiction. Thus, no ED could be delineated in such a way that some of its addresses were in one town, for example, and the rest in another. The census maps, however, had political boundaries as of January 1, 1978, for mail areas and January 1, 1979, for conventional areas (see ch. 3); the ED's used for the enumeration had been delineated using these. Many political boundaries changed between those dates and January 1, 1980, the date established for census purposes. Also, new places and minor civil divisions (MCD's) had been established during that period. An operation—called "office and field separations"—was needed in most district offices to accommodate these changes. It required action by both office and field personnel, and continued almost until the time that a district office closed.

Separations dealt primarily with recognizing political boundary changes reported in the Boundary and Annexation Survey (BAS; see ch. 3) and the local review program (see p. 84). Clerks in the Geography Branch of the Data Preparation Division in Jeffersonville divided the original ED into two or more parts as necessary to recognize the boundary changes, and assigned suffixes "A," "B," "C"—through "M" if required—to the original ED number for each new part of the ED. In a few cases, there were so many splits that a new ED number had to be assigned (rather than continue beyond suffix "M"). For ED's that already had a suffix from the prelist operation, where only suffixes "T" through "Z" were used,[13] that suffix was replaced; thus, ED 0017T might be split into ED's 0017A and 0017B. The Geography Branch then provided revised ED maps and form D-346, Split ED Listing, to the district office.

Block number errors were found as a result of various operations. The Geography Branch reported the need to add or revise block numbers to the district offices on form D-347, Changed Block Number Listing. Some of this was necessitated as part of an ED separation; for example, a block-numbered place annexing a nonblock-numbered area.

Clerks in the district office, guided by directions in the D-532I manual, "separated" the address register of the original ED into two or more parts, as required; that is, they extracted the listings for each part of the original register except the "A"-suffixed portion, and transcribed them into new registers. Any transferred lines in the original register were to be deleted and the counts adjusted. The clerks separated the questionnaires, changing the ED numbers, block numbers, and other identification accordingly. They inserted new ED maps in their respective registers. By comparing the old ED maps that the enumerators spotted with housing-unit locations or going by block numbers, the clerks usually could reassign housing units to their appropriate new geography. Where they could not, the address registers, the D-346 and D-347 listings, and the original and revised ED maps were referred to the field staff for resolution by having the enumerators spot the units' physical locations on the revised ED maps during followup.

Where block numbering changes or additions were involved but it was not necessary to split the ED, the clerks searched the appropriate address registers for the affected listings and assigned each listing to its correct block number, corrected and sorted the questionnaires to reflect the new block numbers, and revised the enumerators' address-register maps accordingly.

Changes not reported from the Data Preparation Division (DPD) but discovered in the district offices were relayed to DPD, so there was frequent two-way traffic. The procedures followed for office and field separations were prescribed in the Office Operations Supervisor's Manual (D-504 [centralized] and D-505 [decentralized]), the Office Operations Assistant's Manual (D-509 [conventional]), and the Field Operations Supervisor's Manual (D-529 [conventional], D-530 [centralized], and D-531 [decentralized]).

Population and Housing Counts

Before followup in conventional areas and between followups 1 and 2 in mail areas, the clerks began summarizing the population and housing-unit counts by ED. The purpose was to provide (1) controls for use during computer processing of the questionnaires, and (2) tentative counts for the local officials to review (see p. 36 for the local review program), to alert the district office management to potential problems that would need special attention during followup.

The clerks first compiled their counts on form D-388, ED/Block Posting Worksheet, in the following categories:

GQ (group quarters) population
Total population
Vacant housing units
Unclassified housing units
Total housing units

[13]Splits of ED's were initiated by prelist office staff during the prelist operation (see ch. 3) because the original ED's were more heavily populated than expected. The splits were made to create reasonable workloads for prelist and followup enumerators. The ED splits were suffixed with the letters "T" through "Z"; for example, a split of ED 0017 into three parts would result in the creation of new ED's 0017T, 0017U, and 0017V. These situations were recorded on forms D-394, Record of ED Split, by the prelist offices and a copy forwarded to the Geography Branch for insertion into the MRF. Eventually, that unit added the splits to the census maps based on information reported by the prelist processing offices.

They totalled the counts for these categories on each address register page and then added them together for the ED, entering these last figures on the register cover. The page and cover totals were supposed to agree with the summed D-388 worksheets for the ED; if not, the reason for the difference had to be determined and corrected.

The data from each line on every D-388 worksheet were transmitted to the regional center for keying to tape and computer editing, that is, checking each entry for validity (e.g., did the district office have such an ED number in the master reference file?) and internal consistency (do the numbers add across as well as down?). The computer printed out a Field Count Capture Diary, form D-343, that detailed each discrepancy and indicated by a "flag" (one or more code letters) what it found wrong. This diary was sent to the district office, where clerks resolved each flagged situation (following instructions in their manual, form D-513Q [centralized/decentralized], D-532J [conventional]). Their actions constituted another operation, called the *population and housing count update,* that retraced the original counting operation to correct discrepancies and keying errors or transmission problems that led to the diary flags, and also to make changes resulting from the resolution of other problems identified in the local review program (see below). Clerks then prepared D-401 ED/Block Correction Worksheets, the data from which were keyed in the regional center and put through the computer for another edit cycle.

These count operations and their accompanying computer cycles had to reflect at various times changes resulting from PEPOC (in conventional areas), the coverage check, or other operations that may still have been in progress when the counts were first summarized. Likewise, the results of followup 2—which included resolving situations found in the questionnaire QC edit; the coverage edit, unit status, and sample checks; postal corrections; office and field separations; and local review—all had to be incorporated into the counts to arrive at preliminary population and housing figures, now tabulated to block and ED levels, before the district office closed. To make certain that all blocks in the ED were accounted for, the block numbers on the worksheets had to agree with those found on the D-349 Final Master ED List. The figures from this operation were released to local officials and the news media, and used in the processing centers for quality control.

Each of the above office operations was supervised, reviewed, and documented on progress-report forms of various types, following procedures in the manual. Further, each operations had an established standard for the expected amount of daily work per clerk. In general, clerks who did not meet the equirements were to be retrained, transferred to other tasks, or dismissed.

When this operation began in the district offices, the geographic staff at the DPD were still correcting the master reference file (MRF), based on information referred back and forth on the form D-395 Geographic Problem Referrals. Because the population and housing counts required a "balance" in the data as they were cumulated by block to each ED and higher levels of geography, the MRF, the master address registers (MAR's), and the followup address registers all had to reflect the same geographic codes. To bring this about, the Decennial Census Division (DCD) staff at Bureau headquarters prepared computer-generated listings (form D-349) of all the ED's and blocks reflected in the MRF as of early June, by district office, and sent these to the field to be compared with the MAR's and the office maps. Clerks in the district offices frequently found it necessary to repeat changes reported earlier, and where field operations were behind schedule, there usually were more changes to come. In August, it was decided to shift both the geographic correction and the tabulation of the final population and housing counts to the regional census centers (RCC's), which were given priority lists for keying the remaining data by ED. Accordingly, the district offices sent to the RCC's their MAR's and other appropriate forms that covered any unbalanced or unreported ED's, and DPD provided field-capture referral reports (D-363 for ED's and D-364 for blocks). Mainly because of procedural and allocation problems, resolution of unbalanced or unreported ED's tended to be slower than expected, sometimes causing significant gaps between the time an office physically closed and the date when the Population Division at Bureau headquarters gave its approval and authorized the release of the official preliminary counts to the press. In some cases, the RCC's were not able to resolve the geographic problems until after the MRF had been updated for the last time, and could not "balance" those particular ED's until after their returns had been shipped to the processing centers. As of the end of September 1980, 96.8 percent of the ED's had been reported to Bureau headquarters and, of these, 95.6 percent were balanced.

As of the beginning of December, over three-quarters of the district offices had field counts released to the press, with the remainder reported within 3 weeks.

The Local Review Program

Introduction—Local review was one of the Bureau's new coverage improvement efforts for the census. Plans called for officials of some 39,000 local governmental units, including all those eligible for Federal revenue-sharing funds, to compare the Bureau's working estimates of housing-unit counts in their jurisdictions with their own records before the census began, and then look at preliminary counts resulting from the enumeration. The first comparison would alert the Bureau to missing addresses and unexpected workload changes, while the second, after the census, would allow reconciliation of discrepancies and recanvassing of problem areas, if indicated, before the district offices closed.

Headquarters staff members compiled the local review mailing file (LRMF) during the summer and fall of 1978. This file was based on the Office of Revenue Sharing's (ORS) list of its eligible county, county subdivision, and place governments, American Indian reservations, and Alaska Native villages, with the municipios in Puerto Rico added. The LRMF was updated in 1979 to reflect new incorporations and other changes, as well as the names of Indian reservations that did not receive ORS funds.

In February 1979, the Bureau's Jeffersonville facility mailed each jurisdiction a cover letter announcing the program; a "Local Review Program Information Booklet," form D-70; and a blank "Highest Elected Official and Progam Liaison," form D-71 to be completed. The letter requested addressee corrections (if needed) and the assignment of a liaison. The information booklet also was sent to State Governors and Members of Congress. At the same time, the Bureau began a publicity campaign that included the involvement of such organizations as the State

Municipal League, the Federal-State Cooperative Program for Population Estimates, and some State planning departments.

The LRMF was refined in the summer of 1979 on the basis of an 80-percent response to the mailing, and updated again in the fall after a followup of nonresponse cases, and the officials' and liaisons' names and addresses were added to the records.

The local responses generated numerous requests for specific guidelines in the types of evidence of discrepancy the Bureau would accept in the program; this led to the preparation of a "Technical Guide," form D-72, that was mailed to everyone in October 1979.

Revisions to the program—As originally planned, there were to be two phases to local review, precensus and postcensus. In the precensus phase, living quarters counts, where applicable, were to be provided at the block level (where census block numbers were assigned) or the ED level, along with census maps. In the postcensus phase, population and housing counts tallied after followup 2, also at the block level, were to be sent out in July 1980 along with another set of census maps. In February 1980, the Bureau decided to cancel the precensus phase and have the postcensus phase after followup 1, with population and housing (occupied and vacant) counts only down to the ED level. These changes were necessary for two reasons: First, the number of uncoded addresses (i.e., without block numbers) in the urban TAR (tape address register) areas was unexpectedly high and, second, not all the maps were ready yet. Without the maps, the MRF (master reference file) that controlled ED and block numbers also was not ready. Because the uncoded-address rate for TAR areas averaged 13 percent nationwide, it was thought that giving counts based only on coded addresses would be counterproductive: Local officials would be confused, and unnecessarily concerned about undercoverage; and the Bureau felt that many of the problems reported under these circumstances would be identified anyway in the planned coverage checks and the post office casing operations.

This news was first announced to a selected group of local-review liaisons at a meeting on February 15, and then to all other officials and liaisons by means of a letter in early March.

A "1980 Census Revised Local Review Program Information Booklet" (form D-77), rewritten to reflect the program changes, was mailed to all participants in late April-early May 1980, together with copies of census ED maps and a Geographic Area Reference Listing (form D-416; see below). The maps, which reflected legal limits as of January 1, 1978, for mail areas and January 1, 1979, for conventional areas, contained ED numbers and boundaries as well as block numbers. The reference listing showed the complete hierarchy of census geography from the block level up, so local officials who had prepared block counts to compare with the census data would be able to group the blocks into ED's.

Procedures—For the Bureau, the regional census manager had the overall responsibility for the program in each region and assigned geographic planning specialists (GPS's) and district office managers as the census representatives to the individual jurisdictions. These persons were the principal Bureau contacts with the local governments—receiving the officials' responses, screening them, generally deciding what actions the district offices should take, and providing the officials or liaisons with the results of any Bureau checks. The GPS's were responsible for the distribution of the local review listings and received all the local review files from the district offices when they closed; the district office managers assigned office review or necessary recanvassing based on the officials' responses. Procedures were detailed in a manual (form D-518).

The GPS's prepared the review materials sent to each jurisdiction, using mailing labels and a control list of their assigned governments. Each package contained a listing of 1970 final population and housing counts (by tract, place, MCD, and/or county, where applicable) together with the same counts from the 1980 census followup 1—all generated by computer in the regional census center, blank response forms (D-74), return envelope(s), and a transmittal letter to which was attached a slip with the census representative's name, address, and telephone number. The packages were hand-delivered or sent by certified, return-receipt mail.

Local officials were asked to respond with the reference to the housing and group-quarters (GQ) counts (without commenting on population), using the D-74 forms or facsimiles, within 10 working days of receipt, but responses were accepted almost until it was time to close the district offices. Replies were requested at the ED level, with block data if available, but were accepted at the census tract level, or even at the place level if the place was small. Comments had to be based on "hard" evidence (such as building permits, utility connections, tax records, etc.) of a possible discrepancy and were to deal with missed housing units and GQ population only, not with population counts in general. Despite the fact that local jurisdictions were advised about the preliminary nature of the counts they were asked to review, some mayors or other officials protested the figures at this point, particularly where it appeared that population had been lost since 1970.

The census representatives screened the responses for acceptability, i.e., that they met the criteria for hard evidence, addressed the appropriate issues, and were at a low enough geographic level to handle. The district office managers decided how checks were to be made. Where possible, office reviews were conducted first to see whether discrepancies could be resolved there. If not, areas were assigned for recanvassing. In some cases, checking was delayed until followup 2 was completed, to see whether that had resolved the problems—which it had in many cases. Managers were allowed to recanvass up to 15 percent of the housing units in any one jurisdiction, a figure budgeted on the basis of the Bureau's experience in the Richmond dress rehearsal (see ch. 2); additional recanvassing required special permission. After the rechecking and recanvassing was completed, the census representatives were to report in writing to the local officials as well as to prepare weekly progress reports (form D-421) on the program.

Areas with populations of 250,000 or more were given the option of receiving their local-review counts on computer tape as well as in printed form; about 43 qualifying jurisdictions availed themselves of that opportunity. However, these tapes (tailored to the governments' particular track/density requirements) were produced after the printed listings, causing consequent delays in completing the review process. Originally, it had been planned to provide all areas that requested the counts on tape with a test tape for use in developing their review systems. The test tapes reflecting the original two-phase review process, were sent

in October 1979 to all governments that had requested them up to that time, but none after that.

About 12,400 (32 percent) of the 39,000 governmental units actually participated in the local review program, with approximately 6,500 (52 percent of the 12,400) finding problems that they felt needed resolution. About 2,500 of these cases had evidence that the Bureau could check; these involved over 13,000 ED's, or 4 percent of all the ED's in the Nation. Rechecking and recanvass resulted in the addition of about 53,000 housing units, deletion of 20,000, and transfer from one ED to another (either because of boundary problems or geographic miscoding) of 28,000; and net addition of 76,000 and transfer of over 56,000 persons. The program's estimated cost was about $4.3 million, of which $950,000 was for recanvassing.

Closing the Offices

The principal operation preparatory to closing the offices was to pack and ship the questionnaires and address registers to the designated processing centers (Laguna Niguel, CA, New Orleans, LA, or Jeffersonville, IN), as specified in the D-513R Packing Operation Manual and as explained in training that included a short audiovisual aid, AV-39, Packaging. In general, short- and long-form questionnaires, and supplemental questionnaires used on Indian reservations all were opened flat and packed in serial-number order in separate cartons for each type of questionnaire, by ED, and the cartons were labeled accordingly. The address registers were stacked in cartons, serially arranged with the lowest-number ED at the top and the highest at the bottom, and so labeled. The Shipping Memoranda Book (D-251 [centralized], D-252 [decentralized], D-253 [conventional]) directed how extra forms, manuals, and other office materials and supplies were to be packed and shipped, or otherwise disposed of. Property (furniture, office machines, etc.) was returned and service and space use discontinued as specified in the various agreements and leases.

The final event for each district office occurred about a week after it closed: The regional census center delivered announcements of the preliminary population and housing census counts (see p. 83) to the local officials and released them to the media. The Bureau began publishing these figures in its PHC80-P series of *Preliminary Population and Housing Counts* reports later in the year.

Closing the district offices was not without incident. At the end of May, a fire in the premises on the floor beneath the Framingham, MA, decentralized office caused water and smoke damage to the central bin files. Some 75,000 household questionnaires, or about a quarter of the workload were affected: about 50,000 of the 75,000 could not be salvaged, while the remaining 25,000 could be dried and transcribed. With the aid of an extra clerical crew and space provided by the city, records were reconstructed and questionnaires were transcribed. Reinterviews to replace the destroyed questionnaires took place during followup 2, and the office was able to close by the end of August along with others in the Boston region.

Far more serious was a fire that virtually destroyed the Bedford-Stuyvesant (centralized) office (North Central Brooklyn, NY) on October 27, 1980, before its records had been shipped to the processing center. This required an emergency recounting operation that involved sending in experienced Bureau personnel and temporary staff from surrounding offices and regions to help new census-takers recruited locally. New address registers had to be prepared from a variety of sources, including lists salvaged from the burned-out building and information from headquarters and Jeffersonville. Special publicity was generated—printed materials, sound trucks, information activities through community and government leaders, and the like. With fresh supplies shipped in, enumerators went door to door to collect data for about 225,000 occupants of 96,000 housing units, the results were processed, and the recount was completed on December 17. The Bedford-Stuyvesant recount operation cost $1.317 million.

Other circumstances beyond the Bureau's control that affected census operations in 1980 included the following: the volcanic eruption of Mount St. Helens in Washington State, civil disturbances in Miami, FL, a postal strike in New York city that delayed questionnaire delivery for about a week, and mail carriers' failure to deliver about 200,000 questionnaires in Chicago, IL.

The 298 decentralized offices (including 12 that had two procedures), the 87 centralized district offices, and the 24 conventional offices closed during the following periods (dates for individual offices appear in app. 5A).

	Decentralized		Centralized		Conventional	
Closed by—	Number	Percent	Number	Percent	Number	Percent
1980:						
Aug. 30	51	17.1	26	29.9	20	83.3
Sept. 15	215	71.9	53	60.9	21	87.5
Sept. 30	291	97.3	67	77.0	23	95.8
Oct. 15	296	99.0	82	94.3	24	100.0
Oct. 31	298	100.0	86	98.9		

Closing dates for 1980 may be compared with those for 1970 (when Census Day was the same, but procedures and deadlines differed):

Office	1970	1980
First decentralized	Mankato, MN 5/20	Idaho Falls, ID 7/25
Last decentralized	NE Bronx, NY 9/11	NE Queens, NY, Yonkers, NY 10/17
First centralized	Chicago, IL 7/1	Hartford, CT 7/25
Last centralized	Washington, DC 9/25	NC Brooklyn, NY 12/17
First conventional	Cedar Rapids, IA 5/8 (and 7 other offices)	Pierre, SD, Redding, CA 7/29
Last conventional	Ft. Pierce, FL 6/30	Hays, KS 10/6

Based on reports from the district offices, the number of household questionnaires completed in decentralized, centralized, and conventional areas, by region, are shown in table 6.

Table 6. Household Questionnaires Completed in Each Area by Region

(Some regions did not have centralized or conventional procedures)

Region	Total housing units	Occupied housing units			Vacant housing units		
		Decentralized	Centralized	Conventional	Decentralized	Centralized	Conventional
Total	88,396,988	66,504,923	10,477,200	3,396,887	6,265,354	817,036	935,588
Boston, MA	7,415,509	5,409,958	1,004,387	220,698	603,673	74,997	101,796
New York, NY	5,906,235	3,068,543	2,533,360	—	143,687	160,645	—
Philadelphia, PA	7,574,874	5,686,016	1,216,188	—	559,785	112,885	—
Detroit, MI	7,697,833	5,778,041	1,018,882	231,946	432,076	101,986	134,902
Chicago, IL	7,778,218	5,715,901	1,517,566	—	426,676	118,075	—
Kansas City, KS	7,552,517	6,047,537	366,601	402,581	528,149	41,631	166,018
Seattle, WA	4,726,114	3,270,737	—	979,658	285,518	—	190,201
Charlotte, NC	6,470,022	5,482,445	390,229	—	565,312	32,036	—
Atlanta, GA	9,617,637	8,237,388	335,971	—	1,017,256	27,022	—
Dallas, TX	8,906,642	7,441,142	492,346	49,646	857,943	53,959	11,606
Denver, CO	5,137,376	2,965,681	432,556	1,158,330	303,041	31,580	246,188
Los Angeles, CA	9,614,011	7,401,534	1,169,114	354,028	542,238	62,220	84,877

— Represents zero.

SPECIAL ENUMERATION PROCEDURES

Introduction

Over time, as part of its effort to collect information about all people within the scope of the decennial census, the Bureau developed a number of procedures for enumerating those persons who—

- lived in *special places*—i.e., with living arrangements other than the standard apartment or house normally occupied by a household—such as institutions, motels, military bases, ships, and other quarters containing groups of unrelated individuals,

and/or

- by reason of their official status, transient nature, or unusual geographic or socioeconomic conditions, needed to be enumerated in ways that varied from the norm of the household census, for example, Members of Congress, overseas travelers, and people living in Alaska and on American Indian reservations.

Special-place enumeration, with field staffs assigned for that purpose, allowed the Bureau to (1) count within a short time period large numbers of people in places affected by school recesses, rapid population turnover, and the like, and (2) collect sample data for persons in special places without overburdening respondents. The following sections describe various aspects of this complex operation, which enumerated over 5.7 million people (2.5 percent of the U.S. population) in 1980. (Results were published in the 1980 Census of Population, series PC80-2-4D, *Persons in Institutions and Other Group Quarters,* report.)

As noted in chapter 1, no attempt was made to enumerate directly the "overseas" population in 1980. Navy personnel with long-term assignments abroad were assumed to be part of the 1980 overseas population, as in 1970. Accordingly, those aboard ships attached to the U.S. 6th and 7th Fleets on Census Day 1980 were so treated. The Department of Defense and the Office of Personnel Management, respectively, furnished administrative counts of members of the Armed Forces and Federal employees overseas, together with the number of their dependents living with them. These were published only in table 1 of the PC80-1-A1, *Number of Inhabitants,* U.S. Summary report. Persons "temporarily abroad" were counted at their usual residences in the United States, although no length of stay abroad was specified. In 1976, the Census Bureau's Deputy Director told the Bureau's oversight subcommittee in the House of Representatives that there were no plans to include the overseas population in the 1980 census for congressional apportionment purposes as it had been in 1970 (and only in 1970), when some 1.6 million persons were allocated to their home States of record, but not to areas below the State level; that 1970 allocation affected the apportionment of one seat in the House. By 1980, the number of Americans overseas had declined to under a million, a figure that was not expected to affect the apportionment results. Further, a Federal commission had found biased reporting of "home State of record," as some members of the Armed Forces selected States with no or low income taxes rather than their true "home States."

Special Places—For 1980, "special places" included such living quarters as hotels, motels, campgrounds, prisons, ships, mental hospitals and long-term wards in general hospitals, college and university dormitories, fraternity and sorority houses, military installations, marinas, migrant labor camps, flophouses, missions, nursing homes, and orphanages. In addition, any single-family home or apartment, rooming/boarding house, or similar type of residental unit occupied by 10 or more unrelated persons, or by 9 or more unrelated to the occupant who owned or rented the living quarters, was considered "group quarters" rather than a housing unit and was included in the "special place" classification. (In 1970, the threshold for distinguishing between a housing unit and group quarters was 6 or more unrelated persons, or 5 or more unrelated to the household head.) Group quarters, even when resembling housing units, were not included in the housing inventory for census purposes; only population data were collected there.

There were three types of living arrangements that might be located at special places: housing units, institutional group quarters, and noninstitutional group quarters. Not all special places contained all three types, but any combination of the three could be present at any particular special place.

Housing unit—A housing unit (see ch. 12) generally was a house, an apartment, a single room, a group of rooms, or a mobile home occupied as separate living quarters (or intended as such). If occupied, a tent, houseboat, railroad boxcar, bus, lean-to, etc., also could be a housing unit.

Institutional group quarters—These quarters were occupied by one or more persons under custody or care, such as children in an orphanage, patients in a nursing home or in a chronic-disease ward or other institution, or prisoners in a penitentiary. If more than one building was involved, each constituted a separate institutional group quarters. If a building at any correctional facility for adults and/or children contained both male and female inmates, the building was further subdivided into separate group quarters by sex. Half-way houses and general and maternity wards at a hospital were classified as "noninstitutional" (see below), even though the persons staying there were under custody and/or care. Quarters occupied by staff members, with or without families, were housing units if they met the criteria of separateness and direct access; otherwise, each unit was considered as separate, noninstitutional group quarters.

Noninstitutional group quarters—In general, all group quarters not otherwise defined as "institutional" were classified as noninstitutional. These included:

- Quarters for college- or university-level students in the following types of places, provided the place was not restricted to students who had their families living with them: (1) school-owned or -operated dormitories, (2) fraternity and sorority houses, (3) privately owned and operated off-campus rooming and boarding houses restricted entirely to students and also meeting the minimum of persons required for classification as "group quarters";
- Nurses', interns', and staff dormitories at hospitals;
- Rooming/boarding houses and similar residences with 9 or more occupants unrelated to the owner/renter, or a total of 10 or more unrelated persons (see p. 50a);
- General and maternity wards at hospitals, provided one or more of the patients had no usual home elsewhere;
- Halfway houses, including those that provided medical care and/or where residents stayed involuntarily.

Organization—Each census district office in the United States and Puerto Rico had a staff to which the "special place" operation was assigned. In centralized and decentralized offices, this staff generally consisted of a special-place operations supervisor (SPOS), a senior office clerk, several clerks, and an appropriate number of crew leaders and enumerators. In conventional offices, the operations were overseen by a special-place senior office clerk (SPSOC); the clerical and field personnel all were supervised by the field operations supervisor (FOS) and were helped as needed by the regular enumeration staff. There was no special organization for this purpose in the outlying areas (the Virgin Islands, Guam, American Samoa, etc.); here, the census manager determined what, if anything, had to be done and made the necessary arrangements.

The Field Division at Bureau headquarters developed the special-place procedures and training based on technical specifications from the various divisions involved in the census, and wrote the necessary manuals, modifying them as needed based on experience in the pretests and dress rehearsals. The Decennial Census Division coordinated the processing operation and prepared lists of places based on national contacts and records. Each of the 12 regional census centers had a special-place regional technician (SPRT) who oversaw local activities.[14]

One of the Bureau's three processing centers, the one in New Orleans, included a clearinghouse that received and distributed completed census returns from ships and most data-collection forms that needed to be transferred from one district office to another because the respondents reported their usual homes elsewhere. The special-place units in the district offices were responsible for handling the forms they received, either directly or from the clearinghouse, and whether part of a special-place operation or collected in the course of the regular household census (e.g., a household questionnaire marked "UHE" [usual home elsewhere]).

Preparations—Before 1970, the year when a significant part of the decennial census first was taken by mail, the Bureau identified special places fairly simply: Military installations, large hospitals, penitentiaries, etc., were located on maps and designated as separate enumeration districts (ED's). Census-takers added other places as they made their door-to-door rounds. These lists were compiled from commercially supplied tapes and block-by-block canvasses months before the mailout. This meant that in 1970 and 1980, identifying special places in time to incorporate them into the overall census operation (and also avoid duplication of effort) became a complicated but necessary procedure.

In the mid-1970's, the Decennial Census Division began assembling a list of approximately 125,000 special-place names and locations from about 40 different sources. Some of the listings—often in tape form—were purchased from commercial vendors. Other primary sources included lists of military installations, American Indian reservations, Federal and State prisons, Veterans Administration and Public Health Service hospitals, migrant workers' camps (from Federal and State labor agencies), nursing homes, colleges and universities, and other institutions. For 1980, the Bureau also used its own standard statistical establishment list (SSEL), an ongoing file of establishments covered by its economic censuses and surveys, primarily to make certain that the special-place lists would include logging camps, small hotels and motels (especially those with minimal rates), racetracks, and rooming and boarding houses. The SSEL, as well as some of the other source lists, tended to contain mailing addresses for owners, agents, or corporate headquarters, rather than physical locations, so that additional research had to be done

[14]As each regional center was responsible for 30 to 40 district offices, original plans called for two SPRT's for each region. Budgetary considerations caused a cutback to one.

in a telephone-directory operation in the Bureau's Data Preparation Division in Jeffersonville, IN, to identify locations. All of the names and addresses had to be arranged in the same format for keying and for subsequent computer processing in which duplications were eliminated. The results were keyed to tape in the winter of 1978-79 in Jeffersonville.

The addresses gathered in Suitland headquarters were printed out by computer into the following:

- An alphabetical listing (on standard fanfold paper) for each district office.
- Control/shuttle card sets (D-350/352 for centralized and decentralized offices and D-351/353 for conventional offices) for use in the enumeration. These sets consisted of two-part, pin-fed NCR (no carbon required) paper and card stock. Other known information, such as geographic and administrative codes, was included with each address.
- A set of labels for each special place that were subsequently applied mechanically to a letter (D-30), and a poster (D-22). The letter advised the person(s) in charge of the special place that a census representative would visit and asked for an estimate of the number of persons to be counted; the poster, announcing the census, was to be displayed where occupants could see it. The poster also explained that the special place would not be enumerated by the mailout/mailback method being described in promotional advertising and in the news.

These materials were assigned to district offices by computer-matching the address ZIP Codes to a list of district offices by the ZIP Codes within their boundaries. Misassignments, primarily where ZIP Codes crossed district boundaries, had to be corrected later in the field by redirecting the materials in question.

The computer generated listings of special places, geocoded to ED and block based on their addresses, for all TAR areas (i.e., those with tape address registers to begin with). For most of the 130,000 registers compiled through prelisting (see ch. 3), the prelist enumerators already had allocated the special places to their correct geography. After producing some 300,000 special-place listings, the computer generation of listings for the remaining areas was cancelled because of time and resource constraints. The special-place units in some district offices, therefore, had to manually review the alphabetical lists, geocode the addresses, and transcribe them to "yellow pages" (forms D-101B, 102B, or 103B, depending on the type of district office involved) that followed the regular "white pages" (for households) in each ED's address register.

In "conventional" areas, the regular enumerators who visited each address to collect the census returns identified and listed special places not already shown on their "yellow pages" for subsequent handling by the special-place units; they also turned in any household questionnaires that the special-place occupants might have completed.

Shortly after the district offices were opened, the district managers or field operations supervisors (FOS) visited self-enumerating places (see p. 112) such as military installations or Federal or State prisons to make certain that preparations for the enumeration had been made and instructions were understood, and that someone had been appointed to be officially responsible for its completion. In February or early March 1980, the special-place personnel made advance arrangements at colleges and universities, such as contacting administrative staff members, determining a specific date for enumeration (especially important if the students were on their "spring breaks" on or shortly after April 1), and obtaining campus maps, student directories, and lists of dormitories, on-campus residences, and fraternity and sorority houses. Also contacted were large special places—those with 150 or more persons, mobile home parks/trailer courts, homes for unwed mothers, and (by telephone) "T-Night" and "M-Night" places (see p. 44 ff.). These arrangements were noted on the control cards for the enumerators' information.

Public-Use Forms—In addition to the regular census questionnaires (forms D-1 and 2, English, and D-1S and 2S, Spanish) mailed to households, the advance census report (ACR, form D-13) used for households in "conventional" areas, and the D-20 "Individual Census Report"—commonly referred to as the ICR—with a D-20S Spanish-language version, there were several data-collection forms designed for special-enumeration situations. These were the D-29 "Overseas Travel Report," the D-21 "Military Census Report," the D-23 "Shipboard Census Report," and the D-15 "Supplementary Questionnaire for American Indians." All of them are discussed in the sections below covering those particular activities.

The ICR (see app. 5B for facsimile) had several uses beyond those in the regular enumeration. In the latter, the ICR was used to enumerate individuals who were lodgers or boarders living with a respondent who could not furnish information about them, or guests in a household who had no one at their home address(es) to report about them in the census. In the second situation, the ICR would be forwarded to the district office responsible for the home address; otherwise, the information collected on the ICR was transcribed to the appropriate household questionnaire for processing in the census. The special-place operation used the ICR for these purposes as well as in situations such as the following: (1) an individual who could not readily be associated with a particular household, as in the "casual count" transients (see p. 49), (2) other persons in group quarters or enumerated during the "T-Night" and "M-Night" operations, and (3) inmates of institutions where individual respondents could not be interviewed personally.

The ICR contained population questions only, and was so constructed that the 100-percent items (sex, race, age, marital status, and Spanish origin) appeared on the reverse side of the cover (page 2), while the sample questions took up the rest of the form (pages 3-8). Thus, depending on whether or not the person was designated for a long-form (sample) interview, the ICR could be used as sample questionnaire or, with that portion detached, as a short-form return. Persons found in "T-Night" places (see p.44) were asked to complete the entire ICR, as the enumerator would not know whether the sample information would be required for the persons' "usual" addresses.

In most types of special places, the enumerator left an ICR package (either a short or sample form and an envelope) to be completed by or for each individual and held for collection during a return visit. (For group quarters, the enumerator then would transcribe the information from each ICR onto the appropriate regular questionnaire or continuation form.) ICR's for persons with home addresses outside the district office's area were turned in without transcription. The office staff forwarded them to the New Orleans processing center, where clerks determined where

to send them by matching the home address ZIP Codes with a listing of district offices by ZIP Codes covered. After receipt, the home district office compared the ICR with its records for the address and transferred the data to the household questionnaire for that address, as necessary.

The enumerators carried two other forms that they presented as needed: Form D-27 was an introduction for any Hispanic respondents they found who could not speak or read English; it explained that a Spanish-speaking enumerator would visit at a later date. The enumerator entered the respondent's name and address on this form and gave a copy to the crew leader for assignment purposes. Form D-31, the "Privacy Act Notice," assured the respondent that the information he or she supplied would be kept confidential, and it listed (on the back) some uses of census data. (Similar information appeared on the D-40 envelope, so, in practice, few D-31 notices were used at group quarters.)

Enumeration Materials—Figure 10 lists for ready reference the principal manuals and internal control documents used in the special place operation, by form number, name, and type of district office (C, conventional; DT, decentralized; CT, centralized). There were other forms used in reviewing the special place

Figure 9. Selected Public-Use Forms Used in Special Enumeration Procedures

Form	Item	Quantities printed: Original	Reorder	Total
D-15	Supplementary questionnaire for American Indians	235,000	240,000	475,000
D-20	Individual census report	20,000,000	800,000	20,800,000
D-20S	Individual census report, Spanish version	600,000	—	600,000
D-21	Military census report	2,100,000	—	2,100,000
D-23	Shipboard census report	500,000	—	500,000
D-29	Overseas travel report	300,000	—	300,000
D-30	Letter: Advance notification of special place	450,000	—	450,000
D-72	Residence designation for U.S. Congress Members	1,500	—	1,500

— Represents zero.

Figure 10. Principal Manuals and Control Documents for Special Place Operations

Form	Title	Type of district office[1]
D-101B	Special Place Listing Page	C-DT
D-102B	Special Place Listing Page	DT-CT
D-103B	Special Place Listing Page (Precanvass)	DT-CT
D-116A	Special Place Sample Selection Book (1/6 sample)	C-DT-CT
D-116B	Special Place Sample Section Book (3/6 sample)	C-DT-CT
D-350	Special Place Control Card	DT-CT
D-351	Special Place Control Card	C
D-352	Special Place Shuttle Card	DT-CT
D-353	Special Place Shuttle Card	C
D-362	Special Place Shuttle Card (Continuation)	C-DT-CT
D-513F	Special Place Materials Processing Manual	DT-CT
D-548K	Enumerator's Supplement, Oklahoma	DT
D-549N	Indian Supplement to Enumerator's Manual	C
D-554K	Crew Leader's Supplement, Historic Areas of Oklahoma	DT
D-555N	Indian Supplement to the Crew Leader's Manual	C-DT
D-561	Questionnaire Reference Book	C-DT-CT
D-561A	Indian Questionnaire Reference Book	C-DT
D-565	Special Place Operations Manual	DT-CT
D-566	Field Operations Assistant's Manual for Outlying Areas of Alaska	C
D-567	Special Place Operations Manual	C
D-569	Special Place Enumerator's Manual	DT-CT
D-570	Special Place Regional Technician's Manual	C-DT-CT
D-571	Special Place Enumerator's Manual	C
D-572	Special Place Crew Leader's Manual	DT-CT
D-573	Crew Leader's Manual for Outlying Areas of Alaska	C
D-574	Special Place Crew Leader's Manual	C
D-575	Manual for On-Site Census Representative, Self-Enumeration—Military Installations	C-DT-CT
D-576	Manual for Self-Enumeration—Military Installations	C-DT-CT
D-576A	Manual for Self-Enumeration—Military Installations, Alaska	—
D-577	Manual for On-Site Census Representative—Hospitals and Prisons	C-DT-CT
D-578	Manual for Self-Enumeration—Hospitals and Prisons	C-DT-CT
D-579	Enumerator's Manual for Outlying Areas of Alaska	C
D-580	Manual for Self-Enumeration—Military Crews of Ships	C-DT-CT

[1]C, conventional; DT, decentralized; CT, centralized.

enumerators' work, reporting progress, and the like; these resembled the ones used in the regular household enumeration and are not listed here.

Census Procedures for Special Places

General—What follows is a description of how a special place was enumerated. A special-place supervisor or other district office representative may have made the advance contact and arranged for the enumerator's visit where the special place in question was large (with 150 or more persons, for example), or was a military installation, college or university, home for unwed mothers, or (in centralized/decentralized areas) a mobile home court or trailer park that had transient sites occupied by persons with no usual home elsewhere. Particular situations—counting transients, procedures for self-enumerating places, canvassing Indian reservations, etc.—are covered in later sections.

As noted above, there was to be a control card and a shuttle card for each address appearing on the special place listing pages at the back of the address register for every enumeration district (ED). The registers and the control cards were kept in the district office. The special place enumerator was given a census map and his or her shuttle cards, each of which represented a place to be visited, where the enumerator was to do the following:

- Check the geographic codes on the shuttle card against the map and make corrections, if necessary.
- Contact the person in charge, using a formal introduction procedureprescribed in the enumerator's manual.
- Obtain pre-enumeration information from the contact person. This involved making certain that there was a shuttle card for each ED and/or census block with living quarters at the special place and, in the case of colleges or universities, for each school-owned and/or -operated dormitory and each fraternity or sorority house. Additional control and shuttle card sets were to be prepared as needed. Then the enumerator was to list on the shuttle card all of the place's living quarters—first, housing units, and then noninstitutional and institutional group quarters (GQ), respectively—assigning a within-place control number to each.
- Fill a separate line in the appropriate sample selection book[15] for each housing unit assigned to be enumerated as part of the special place (rather than by mail) and for each person residing in GQ. For each of the group quarters, the enumerator was to enter the room number (or location) and name or other identification of each resident or, for institutional GQ at orphanages, the name (and age, if available) of each child.
- Enumerate each housing unit or GQ on a short- or long-form household questionnaire, depending on where the unit (or each person in GQ) appeared in the sample selection book; if the unit or person fell on a "sample" line, the long-form questionnaire was to be used.[16] The prescribed introduction procedure was printed in the enumerator's manual. In decentralized and centralized areas, the special place enumerator normally did not collect data for housing units associated with the special place, but simply reported their presence to the crew leader, who arranged for the regular household enumerator to handle them. In conventional areas, or where it was not feasible to call in the regular enumerator, the special-place enumerator listed and canvassed the housing units within a special place. Where necessary, he/she left the appropriate household questionnaire and a D-43 "leave-it" envelope asking the respondent to hold the completed return for another visit.

  or

  Enumerate each person in GQ by distributing and collecting individual census report (ICR) packages, or by arranging to have this done, or where necessary, directly interviewing the persons. The information taken from the ICR or through the interviews was entered on the appropriate type of household questionnaire (D-1 or D-2), again according to the directions in the sample selection book.[16]
- Record on the shuttle card the results of each living quarters' enumeration.
- Review the questionnaires, sample selection book, and shuttle card entries for completeness and accuracy, and obtain and fill in any missing information.
- Give the completed materials to the crew leader on a flow basis as each special place's enumeration was finished.

The crew leader reviewed the turned-in materials; clerks in the district office posted the population and housing counts to the ED address register.

"P" (park) enumeration districts and marinas—ED's comprising national parks, monuments, seashores, etc., and some national forests (those in the Western States and approximating the forest boundaries) and a few State parks were identified by the prefix "P" in front of the ED number. Here, the special place enumerator could find any combination of places to canvass—GQ, regular housing units, or "T-Night" places such as motels, lodges, and campgrounds—and was expected to list and enumerate them all.

The enumerator was instructed to contact the park or forest ranger or other person in overall charge to obtain a location for each place to be enumerated. The enumerator then was to prepare (for every block, where applicable) a shuttle card if there was not one already, and to spot and number on the ED map the locations of all living quarters. In areas where there were hikers, the person in charge was given a supply of ICR packages to distribute, and was asked to collect the completed and sealed forms from exiting hikers. Elsewhere, the enumerator was to collect and/or transcribe the data in the prescribed manner.

There were 1,112 "P" ED's in the 1980 census, of which 505 (45 percent) had no housing and no resident population. Approximately 131,500 persons were attributed to "P" ED's; there were about 102,000 housing units, with 32 percent classified as vacant. Only 6 percent of the "P" ED's had group quarters.

[15]For most of the country, the long-form household questionnaire was used for 1 out of every 6 housing units; here, the special place enumerator carried a 1/6-sample selection book. In counties, cities, townships, and similar governmental units with estimated populations below 2,500, the sampling rate was 3 in 6; the purpose was to provide reliable data for small areas to meet the needs of certain Federal programs as well as of various data users. The 3/6-sample selection book covered such entities.

[16]If the housing unit fell on the sample line, then both 100-percent and sample housing data were collected for the unit and both 100-percent and sample population data for each occupant. If persons in GQ fell on the sample line, only population data—both 100-percent and sample—were entered on the long-form questionnaire. Otherwise, the enumerator asked only the 100-percent questions—both population and housing—at housing units, and population alone at GQ.

Marinas were enumerated by personal interview, using short- or long-form household questionnaires, as appropriate. The vessels were to be listed and counted as housing units if the occupants considered them their usual homes, and the population and housing counts were included with those for the adjacent land ED and block number. Boats not classified as "military" or "maritime" vessels and not docked at marinas, but with people living on board, were accounted for on "M-Night," when enumerators visited locks and other places where vessels stopped. Empty slips at marinas and unoccupied boats were not included in the census.

In resort and seasonal areas enumerated by mail or regular household canvass, as well as in "P" ED's and at marinas, there were many persons with usual homes elsewhere (UHE) and, similarly, whole households (WHUHE) in vacation quarters (see p. 48). These were to be identified and accounted for through ICR's or household questionnaires, depending on the circumstances. Enumerators had difficulty reporting some housing units' occupancy status; they classified significant numbers of units that were vacant as of April I as "Vacant-UHE," a status that was intended only for *occupied* units where *all* of the residents were UHE.

Mobile home parks—In the earlier years of this century, "trailer parks" were akin to campgrounds, where vacationers would park their mobile homes, connect them to electric outlets, and avail themselves of showers and other utilities, laundry facilities, and the like. Such parks were truly "special places" for census purposes. In recent years, some mobile home parks, particularly in urban-type areas, have become more like housing subdivisions, with assigned spaces for long-term occupancy. In Florida, Arizona, and other "Sunbelt" States, the units might be there year-round but only occupied seasonally, as in a resort. Many of the units, once pulled thousands of miles on wheels, were placed on masonry foundations and in some States became classified as real, rather than personal, property. This was particularly true of units that were trucked in in sections and assembled.

Some parks resembled small villages, complete with convenience stores and community centers. Nevertheless, a significant number of mobile home parks continued in 1980 to have centralized (or no) mail delivery and unmapped interior street patterns. For 1980, the Bureau considered mobile home parks with spaces for temporary use as "special places," and those spaces occupied by persons with no usual homes elsewhere were enumerated with shuttle cards, control cards, etc. For 1980, vacant mobile homes were included in the census housing inventory provided they were intended to be occupied at that location.

Migrant camps—This designation was applied not only to temporary living quarters for transient agricultural workers (pickers, harvesters, cultivators, and the like), but also to employees' quarters at logging camps, fisheries, canneries, etc. Enumeration of temporary quarters could begin either through the regular or the special-place operation. If the latter, the enumerator interviewed persons in GQ and listed housing units for inclusion in the master address register or, in conventional areas, completed the household enumeration as well. Conversely, if the regular household followup in mail areas found migrant camp GQ in addition to or in place of housing units, the enumerator reported them to the special-place operation for handling.

In 1970, persons living in agricultural migrant camps at census time were counted as residents of the ED's where the camps were located. Officials of several Southwestern States subsequently asked the Bureau to allow such workers to be counted in their States of usual residence. Research supported this proposal, finding that (a) about 90 percent of the migrants claimed to have homes elsewhere, (b) the vast majority claimed to have someone at those homes who could report for them, and (c) most agricultural migrant worker streams were just forming in April and the number residing in camps then would be low. Accordingly, all workers who reported a UHE, including those in approximately 1,700 agricultural migrant camps that were identified, were enumerated on ICR's and counted in their home districts. There were 27,724 persons counted as being in agricultural workers' group quarters in 1980; there are no figures for the total numbers found in migrant camps, as such.

"T-Night" and "M-Night"—There were two special operations for enumerating transients and long-term residents of hotels, motels, tourist homes, Young Men's Christian Associations (YMCA's), campgrounds, and the like; people staying overnight in missions and flophouses; inmates of jails and detention centers where people generally are held for 30 days or less; and people found spending the night in railroad or bus stations, movie houses, etc. (for daytime, see "Casual Count," p. 49). Hotels, motels, and tourist homes charging more than $4 a night (not including tax) per person were enumerated on "T-Night" ("T" for "transient"), which was March 31, 1980. All of the others were canvassed on "M-Night" ("M" for "mission"), the evening of April 8 and the morning of April 9, 1980.

The procedures differed between the two operations. As far as possible, the district office staffs identified and contacted all places before Census Day, using the national special-place lists and local resources. In some cases they had to determine whether the place was a "T-Night" or an "M-Night" candidate. Control and shuttle cards were prepared as usual. At "T-Night" places, it was necessary to distinguish between "permanent rooms"—those occupied by guests or employees with no usual home elsewhere—and "transient rooms," which either were vacant or occupied by UHE guests. The place was classified as "permanent" if at least 75 percent of the rooms were "permanent," otherwise it was "transient." At the "permanent" places, the crew leader was to list all rooms by number or location; at "transient" places, only those rooms occupied by permanent guests and employees. In both cases, "permanent" units were reported to the field operations supervisor (FOS), who arranged for their enumeration as part of the regular April 1 household census. (In "conventional" areas, the special-place enumerator canvassed these as well, using short- or long-form household questionnaires as prescribed.) ICR packages, consisting of a D-41 cover envelope, two form D-20 ICR's, and a D-42 mail-return envelope addressed to the district office were put in plastic "doorknob hanger" bags and delivered in suitable quantities to all the places that had any "transient rooms" for distribution on "T-Night." If a returned ICR indicated that the respondent had someone at home to report for him/her, the ICR was put through

the search process (see p. 48), but if no home address was supplied, the district office took no further processing action. If a person in a "transient room" reported that he or she had no other usual home, the ICR was given to the enumerator to obtain housing information and complete a household questionnaire.

For "M-Night," prior contact obtained estimates of the probable number of persons expected at each place. On "M-Night," the enumerator prepared shuttle cards and listed all housing units and group quarters, and/or room or cell designations. Persons, as they were encountered, were listed in the sample selection book. The enumerator(s), sometimes working in teams, collected the data on household questionnaires and did not use ICR's except in unusual circumstances; "M-Night" persons (except those found in bus, train, or air terminals) were assumed to have no usual residence elsewhere and, for census purposes, were counted where they were staying. Enumerators ordinarily remained in the place from late afternoon until midnight on April 8 to interview everyone checking in up to that time, and left ICR's for distribution to any others arriving after midnight. The enumerators returned the next morning (April 9) and stayed until noon to pick up any completed ICR's, transcribe the data to the household questionnaires, and interview anyone else who checked in. No attempt was made to match "M-Night" returns with the census registers or household returns elsewhere for possible duplication.

There are no data on the number of persons contacted on these two nights.

Self-Enumerating Places

In certain military and institutional situations, the Bureau found it administratively and practically feasible to have personnel of that place enumerate some or all of the residents. In these so-called "self-enumerating places," the military base commanders or the institutions' directors designated employees to work on the census. They were sworn in as enumerators and signed appointment affidavits. At Veterans Administration (VA) hospitals, VA employees who elected to enumerate while on leave or off duty received the normal hourly pay for enumerators from the Bureau; at other places, military and institutional personnel usually served as enumerators as part of their regular work assignments. The Bureau's district office special-place operations supervisor or senior clerk served as liaison and monitored the operation, seeing to it that sufficient materials were provided, records properly kept, and completed enumeration forms returned.

U.S. land-based military and Coast Guard populations—The operations described took place within the United States, Puerto Rico, and Guam, at land-based installations where there was housing for 50 or more people. Smaller bases were enumerated as part of the special-place operation.

For 1980, the Geography Division identified all Coast Guard and military bases that could house 50 or more people by using information from the Department of Transportation (DOT) and from the Department of Defense (DOD) real property inventories, and then acquired maps showing the current boundaries of those installations. The geographic unit at Jeffersonville then delineated these on the census maps, designating each base as one or more "M" ED's ("M" standing for "military")—1,388 for 565 bases. Each base constituted one census block, 001, unless the base had physically separated parts, was partly in a census designated place (CDP), or was split by a census tract boundary, a county line, etc. In such cases, an additional block number(s) was assigned. In an area with published 1980 census block data, 901 usually was assigned, and 902 if a second number was required. (These usually were the only block numbers in the 900 series in the base's tract or block-numbering area, so they were readily identifiable.) In areas for which block data were not published, 001 was the only number assigned to an "M" ED; thus a base, regardless of size or interior road systems, usually was considered as a single block for census purposes. This caused a few problems after the census when the data were used for legislative redistricting, and there were attempts to draw political boundaries through some very large bases where not all facilities had been specifically identified by map spots during enumeration, but it obviated the need to geocode the various military living quarters by block and to publish Armed Forces data at such a level.

In 1970, the military self-enumerated (1) all persons living in group quarters (GQ), using what was called "barracks control," and (2) all on-base housing units. Under barracks control, a person in each barracks was assigned to distribute and collect the military census reports (MCR's), while persons in housing units were enumerated by distributing and collecting household questionnaires. The 1970 census count was found to be about 3 percent lower than the number of resident military personnel in DOD reports. In an effort to correct this deficiency for 1980, "unit control" was tried in the 1977 pretest census of Oakland, CA (see ch. 2). Here, the base's project control officer assigned a representive for each military unit; that person was to account for all people in his/her unit, regardless of whether they lived in GQ or in housing units on or off the base. The results were favorable, and "unit control" was adopted for 1980, but essentially for installations that provided on-base living quarters. Nonresidential installations, such as the Pentagon and other headquarters around Washington, DC, recruiting offices, and the like were exempted from this procedure, as it was assumed that personnel assigned there lived in regular housing units and commuted to their jobs.

Except as noted below, each base in 1980 was assigned one or more crew leaders from the district office, a military project officer, and an appropriate number of military unit representatives and clerks. With the project officer's help, the crew leaders arranged the appointment and swearing in of all the military personnel who were to be involved in taking the census, and were responsible for seeing that the work was done accurately and on schedule. The crew leaders, who reported to the district office's special-place operations supervisors, listed all the group quarters and units assigned to them, prepared shuttle and control cards, assembled ICR packages for civilians in base hospitals, and supplied the unit representatives with MCR's and other census materials. Any housing units on the base were assigned to a regular census enumerator; if not already known, these were identified by occupants who received MCR's and noted on them that they lived in family-type housing (question 2d). (Off-base households and housing units were enumerated as part of the regular household census in the area, whether by mail or conventional visit. Any MCR's or ICR's collected on the base for off-base residents were transcribed to the appropriate D-1 or D-2 questionnaires.) In the remote areas of Alaska, there were no

civilian crew leaders or enumerators sent to the bases; the project officers had direct responsibility for the census-taking, including all on-base housing units.

Enumeration began with MCR and ICR distribution on April 1, and followup for nonresponse started 2 days later. The census included all persons assigned to the installation between April 1 and May 1, although the counts had to be corrected later for those who actually were overseas on Census Day and were therefore out of scope of the decennial census.

By March 27, each unit representative was to compile a list of persons permanently assigned to that unit as of that time, showing name, month and year of birth, sex, race, martial status, and social security number (SSN, last four digits only) from the unit's records. The SSN was entered as part of this control list because each person receiving an MCR and whose SSN ended with any number from 8333 to 9999 (i.e., a 1/6 sample) was to complete the sample population items as well as provide the 100-percent data requested for everyone. The unit representative distributed MCR's to all his/her unit's personnel present, and entered basic data on MCR's for any who were in transit, on temporary duty (TDY) elsewhere, or otherwise absent. Many military installations gave the Bureau computer listings of base personnel.

Completed MCR's and ICR's were returned to the district offices on a flow basis. Those for "usual" addresses that were housing units were sorted to ED and block (in the case of local addresses) or to another district office on the basis of the ZIP Code. MCR's without any addresses were filed without further action; those designated for other district offices were to be sent directly to them or to the clearinghouse. Clerks compared MCR's and ICR's with housing-unit addresses within the district office's area with the census records and transcribed the data to the household questionnaires as necessary. Those for group quarters were listed in the sample selection book and the information was copied onto short- or long-form household questionnaires.

The final 1980 census count of the U.S. resident Armed Forces was 1,634,851, roughly 3 percent higher than the DOD's count of 1,577,697, but it is not known how much of this increase was attributable to "unit control."

Crews of military vessels—The 1980 census procedures for identifying and enumerating crews on U.S. Navy and Coast Guard ships differed somewhat from those used in 1960 and 1970. The Census Bureau's basic policy for 1980 was unchanged from 1970; that is, to count the shipboard population in the vessel's U.S. home port. (In 1960, crew members were counted where their ship was on Census Day.) The differences for 1980 were as follows:

1. Where the home port had 1,000 or more personnel assigned to military ships, the crew members who claimed usual homes elsewhere (UHE) within 50 miles of the port were so allocated in the census. Those without such residences were counted on the ship itself. There were 19 such "large" ports.
2. In five ports split by political jurisdictions, the crew was counted in the appropriate jurisdiction only if their vessel was there on Census Day. Otherwise, the crew was allocated to the official home port. (For example, a ship whose official home port was San Diego, CA, could be assigned to a pier or anchorage physically located in an adjacent municipality if in port, but would be assigned to San Diego city if at sea or at another port on Census Day.)
3. Crews of ships deployed overseas were not enumerated; as with military personnel based in foreign lands, they were part of the overseas count supplied by the Defense Department (DOD).

Using lists, compiled in 1979, of ships and their "afloat strength" (i.e., crews assigned on board) by home port, the Geography Division determined the location of each U.S. Navy and Coast Guard port facility; assigned a "V" ED ("V" for "vessel"), crews-of-vessels (CV) tract or block-numbering area (BNA) in areas with census tracts or BNA's, and block number in block-numbered areas; and associated each ship with an appropriate set of geographic codes. (For details, see ch. 3.) A small percentage of the ships changed home ports between the time the lists were compiled and April 1980, and their returns had to be allocated to the revised geography. In a few cases, new "V" ED's, tracts/BNA's, and blocks had to be established rather late in census operations.

The Bureau provided the DOD with the procedural manual (Manual for Self-Enumeration—Military Crews of Ships, form D-580) and other descriptive materials, and the DOD issued instructions in March 1980 to all Navy and Coast Guard ship captains. (While the Coast Guard was a component of the Department of Transportation, it also was a branch of the Armed Forces.)

The Bureau's New Orleans processing office (NOPO) mailed the captain of each ship a package containing the following materials, based on the ship's reported "afloat strength" (including members of the Marine Corps):

- A cover letter (form D-127)
- A procedural manual (form D-580, as above)
- An SCR (form D-23, "Shipboard Census Report") for each crew member, plus a 10-percent extra supply
- Control sheets (forms D-125 and D-126)
- A return envelope (if the materials were shipped in a carton, the carton could be reused) and address labels.

Except for Coast Guard icebreakers, which were sent their materials in November 1979, the mailout to all other ships took place in February 1980. The NOPO dispatched a number of second shipments in April, based on followup when acknowledgements or completed SCR's were not received on schedule.

Ships with sufficiently large crews had project officers and division representatives; the latter distributed the SCR's to the individuals (with instructions to complete, seal, and return them), maintained the unit control records, and filled in basic information on SCR's for persons on temporary duty elsewhere or otherwise absent. Except for the residence question (2a, b), which asked about a usual off-duty house or apartment within 50 miles of the home port, the SCR resembled the MCR described in an earlier section. Again, persons with social security numbers (SSN's) greater than 8332 in the last four digits (the complete SSN was not collected) were to answer both the 100-percent and sample questions, thus providing a 1/6 sample. The enumeration was to be completed by April 7.

SCR's from ships assigned to the "large" ports (see (1) above) were returned to the home port's district office unless the ship

was deployed to the 6th or 7th Fleets on Census Day. (Deployment status was based on responses to a form submitted by the ship's captain.) In that case, the project officer was to use the address label for the NOPO clearinghouse; personnel in the 6th and 7th Fleets were considered part of the overseas population (see p. 39).

Bureau headquarters provided each district office that had a "large" port a list of the ships from which SCR's were to be expected. In late April, the special place regional technician (SPRT) arranged for headquarters followup of all ships not yet responding, and if SCR's still had not been accounted for by mid-May, Bureau headquarters was to ask the Navy or Coast Guard to provide the missing data from administrative records. The special-place units in the district offices prepared control-shuttle card sets, sorted the returned SCR's by geographic code, and searched the census records for any that reported residence addresses within the district office boundaries. (If the address was not found, the person was to be counted on the ship.)

SCR's with addresses elsewhere were forwarded directly to the appropriate district office (not to the clearinghouse). SCR's not transcribed to household questionnaires as a result of the search were sorted, by ship, according to whether or not they were part of the sample (determined by the SSN), and the data were copied to short- or long-form household questionnaires for processing in the same manner as described for MCR's and ICR's for group quarters (see p. 46).

All SCR's not associated with "large" ports were sent directly to the NOPO clearinghouse, where clerks geographically coded them and transcribed the data onto long- and short-form questionnaires for each ship, regardless of whether a residence address had been reported. The questionnaires were packaged by district office and ED, and shipped to the appropriate processing center to await receipt of the rest of the district office's ED cartons. The district offices that had the "smaller" home ports received counts only; these they added to the master address register covers and included in the preliminary population figures.

Some delays were encountered in following up on ships that had not returned their SCR's or in transferring materials for ships that changed home ports, and some counts by district office and ED were not completed in time for those offices to include them in their preliminary population and housing count operations. Also, during the census, it was discovered that submarines, notably the nuclear-powered ones, required special handling, as they could be at sea for several months at a time without an opportunity to receive or return SCR's. Some had two crews assigned, and it was not always obvious which crew was to be counted on the ship and which as a shore unit.

The enumeration of military vessels attributed 103,214 persons to group quarters.

Crews of maritime vessels—Based on information from the Coast Guard and the Maritime Administration (MARAD), the Bureau decided to mail census forms only to American flag vessels engaged in Great Lakes, coastal, and oceangoing activities. SCR's were not sent (as they had been in 1970) to ships on the inland waterways or to fishing vessels,[17] as it was assumed the personnel would be away from their homes only for a few days and would be included there on household questionnaires. The location policy for 1980 was:

Status of ship on April 1	Action
Docked in U.S. port	Count crew at the port.
In U.S. territorial waters	If destined for a U.S. port, count there; if a foreign port, do not count.
Outside U.S. territorial waters	Do not count; considered part of the overseas population.

(In 1970, crews of coastal-trade vessels were allocated to their home ports.)

In 1979, the MARAD furnished a list of all oceangoing and coastal tankers and dry-cargo vessels, by owner/operator, with average crew size. The Military Sealift Command (MSC) provided lists, with crew strengths and fleet post office (FPO) addresses, for ships under its jurisdiction; these were engaged mainly in transporting goods, and the crews consisted principally of merchant sailors.

After the MARAD sent a letter announcing the census to all owners/operators in November 1979, the Bureau's NOPO mailed the packages of census materials in December 1979 and January 1980. Each ship's package contained:

- An SCR (form D-23, "Shipboard Census Report") for each crew member, based on the listed average strength plus 10 percent
- An acknowledgment of receipt/request for additional supplies (form D-120)
- Two posters
- A location report (form D-3091)
- Return envelope(s) and labels addressed to the NOPO clearinghouse.

All of an owner/operator's ship packages were assembled into one box or envelope and sent to that operator with (1) a cover letter (form D-129) asking that the materials be distributed, and (2) two more posters. (Posters had been sent to union halls as well in 1970, but not in 1980.)

Many ships did not return the D-120 acknowledgments but, unlike the military, these cases could not be monitored through any centralized command; instead, each was contacted at the time for nonresponse followup. Followup was done first by sending "mailgrams" to each owner/operator, listing the ships from which no materials had been received. The Bureau then mailed letters to those owner/operators who still had cases outstanding, asking that they complete the enclosed location reports (form D-3091) and attach lists of persons on board each ship. If such lists were not available, then counts would suffice. As a last resort, this information was collected by telephone. A similar operation had to be mounted in June 1980, when it was discovered that 42 owner/operators of ships engaged in the Great Lakes traffic had not been included in the original material distribution. Over all, followup for maritime crews continued well into August, being complicated by a significant number of changes in ship ownership and delays in obtaining ship locations and counts.

When the clearinghouse received the SCR's and location reports, clerks checked them in and sent the reports to the Geography Division in Suitland for assignment of geographic

[17]Except "floating canneries" in Alaskan waters; see section on Alaska.

codes (district office, "V" ED, and, where appropriate, block number). The coded location reports were returned to the clearinghouse via facsimile copier on a dedicated telephone line. As the Bureau did not know where any of these ships would be on Census Day, many could not be geocoded in advance as the military vessels had been. Some new and unexpected "V" ED's, CV tracts/BNA's, and blocks had to be established for some of the maritime crews at very late stages (e.g., August 1980) of the census operations.

Where no population characteristics had been obtained, they were allocated during subsequent computer processing. A total of 8,229 persons were counted as crews of maritime vessels in 1980.

Hospitals and prisons—As in the enumeration of military bases on land, the Bureau assigned "S" (for "special") ED's to large hospitals and prisons in conventional and some prelist (mail) areas. In these "S" ED's and for other selected institutions, special-place crew leaders were designated to be on-site representatives. These crew leaders, whose primary responsibility was to coordinate the census operations and ensure its completion, had their instructions set forth in a manual (D-577). Each contact person or designated enumerator within the institution also had a manual (D-578) describing his/her duties, how and where to use the ICR's, enumeration control forms (D-128), and sample-selection books, and how to interview personally patients or inmates not capable of completing an ICR. As a last resort, as much information as possible was obtained from the institution's records. When the enumeration was completed, the crew leader collected the household questionnaires, including those to which all the data from the ICR's had been transcribed, and gave them to the check-in clerks at the district office for processing in the normal manner. Where possible, institution officials were asked to designate as sworn enumerators employees who would take the census as part of their official duties. Employees who could canvass only (or partly) on their own time received pay from the Bureau at hourly rates established for enumerators in their area, and the crew leader submitted payrolls for such persons.

Similar arrangements were made for places where health or security conditions were such that neither regular nor special-place enumerators would be allowed on the premises.

Usual Home Elsewhere (UHE) Program

The UHE program was designed to enumerate people who happened to be temporarily away from their usual places of residence—individuals (UHE) or whole households (WHUHE). These were identified from questionnaires returned by mail, collected by enumerators in conventional areas, or discovered through followup operations. The individuals would have been listed in the household roster on page 1 of the regular household questionnaire, form D-1 or D-2, and/or the box following the roster was marked ("If everyone here is staying only temporarily and has a usual home elsewhere, please mark this box"); population data about the persons and housing data for the unit would follow. The back cover of the household questionnaire had a space where home addresses were to be entered. (In 1970, no such population and housing data were requested; enumerators had to collect these at the respective residences as required.)

When such a questionnaire was received in the district office, a clerk in the special-place unit transcribed the personal information and the home address onto a new D-1 (short form) "search" questionnaire(s) and canceled such data on the original. If the WHUHE's box had been marked, the original questionnaire was to be coded and processed as a "vacant-UHE" unit (housing item B [type of unit or quarters]) with the retained housing information, and be followed up where necessary to collect missing data. Most WHUHE's were found in resort areas, with the highest proportions in three States—Florida, California, and Arizona.

The search questionnaire, with the home address now on the front, was sent through a preliminary screening in the district office: If the usual place of residence was within its boundaries, the search questionnaire was edited and processed as necessary; if not, the search questionnaire was to be sent to the Bureau's clearinghouse in New Orleans (NOPO) for geographic coding and transmittal to the appropriate district office, where a further search took place along with ICR's, SCR's, and similar forms. If a match occurred with an occupied unit at the home address, those persons not already enumerated in that unit were added, but if the match coincided with a vacant or deleted unit, no action was taken. If there was no match at all, but the address appeared to represent a single-family home, the search questionnaire was added to the census for followup.

The UHE questionnaires representing entire households (WHUHE) received at the NOPO clearinghouse were duplicated there before transmittal. The data on the duplicates were keyed to tape in the Bureau's Jeffersonville facility and the results were published in 1980 Census of Population, *Supplementary Reports,* series PC80-S1-6, "Nonpermanent Residents by States and Selected Counties and Incorporated Places: 1980."

In 1980, some 972,000 persons claimed UHE status; about 547,000 of them were living in some 301,000 WHUHE units, the search questionnaires for which were processed through the clearinghouse at an estimated cost of $550,000. The remaining individuals were enumerated on individual, military, or shipboard census reports. About one-fifth of all the UHE persons did not provide usable home addresses, i.e., they could not be geocoded, and an additional one-fifth of the records were not searched for various reasons. Of the 603,400 names searched (62 percent), 79,200 (8 percent of all UHE's) were added to the census. (See also the discussion of additions resulting from specific forms under the headings for those forms elsewhere in this chapter.) In theory, the UHE program could have transferred nearly a million persons' census records. It was estimated, however, that at least 214,000 persons were counted twice in this program because their data were not deleted from the original WHUHE household questionnaires.

The count of WHUHE units varied considerably from the number of "vacant-UHE" units processed in the census—874,000. Evidence available after the census suggests that many resort-area housing units or second homes, not occupied on Census Day, were enumerated as "vacant-UHE" when that classification was intended only for housing units *occupied at the time* by one or more persons, all of whom had usual residences elsewhere.

"Were You Counted?" Program

The "Were You Counted?" program was a special publicity campaign (see ch. 4) after Census Day, directed at improving coverage. It encouraged people to contact their census district office if they were uncertain about whether or not they had been enumerated. Newspapers in a variety of languages carried brief forms that respondents could complete and mail in; persons who read the newspapers or received the message by radio or television could call the district office and provide the necessary information to a clerk who would fill out a similar form. The "Were You Counted?" (WYC) forms (D-25) were geocoded and compared with the census records and anyone not found was added to the appropriate questionnaire. Approximately 67,000 persons were added to the census nationally, at an estimated cost of $267,000 (advertising was free).

Procedures for Special Groups or Geographic Areas

"Casual count"—"Casual count" was an operation designed for the inner-city areas of all centralized offices to improve coverage of "street people" and other highly transient persons who, because of their life styles, historically tended to be missed in the census. The "casual count" was conducted at employment, welfare, and food stamp offices during their business hours, and afterwards (until about 8 p.m.) at pool halls, bars, bathhouses, street corners, parks, public buildings, and other places where such people congregated.

Based on recommendations from local officials, the Bureau's community services specialists, and community organizations, the special-place operations supervisor (SPOS) visited prospective locations, contacted the persons in charge, and designated the times and places for the teams of indigenous enumerators to visit. Generally, the casual count took 1 or 2 weeks, but in a few areas, such as New York city, it was repeated because of the high turnover in the target population. Each person at the casual count location who appeared to be at least 15 years old was approached. If he or she did not have a usual place of residence outside the city and claimed not to have been reported in the census ("M-night" or otherwise), 100-percent population data only were collected on an ICR.

In the district office, clerks sorted the completed ICR's as follows.

- Any found to be for addresses outside the city were cancelled.
- Those with a usual address within the city, but outside the district office's own area, were given to the regional technician, who distributed them to the appropriate district offices.

Those with no residence shown were geographically coded to the ED and block where the data were collected, recorded in the sample selection book, and transcribed as indicated to a short- and/or a long-form household questionnaire marked "Casual Count Group Quarters, Block (number)" without any relationship information. Thus, there was in effect one GQ (with persons sampled within it) created for each block in which the enumerators found casual-count persons without addresses in the city.

ICR's with addresses within the district office's boundaries were compared with existing census records. Any ICR person not already enumerated was added to the appropriate household questionnaire without further followup for sample information.

Approximately 13,000 persons were assigned to "casual count" group quarters. The total numbers of persons contacted or ICR's completed are not known; costs were estimated at $250,000.

Overseas travelers—Form D-29, "Overseas Travel Report" (OTR), was used in 1970 and 1980 to make certain that U.S. residents in transit were included in the census. The Decennial Census Division compiled a list of international air and ship lines, both American and foreign, and sent each of about 60 of the larger carriers 5,000 OTR's with a request that they be distributed between March 15 and April 1 to U.S. passengers departing for overseas. The OTR was a self-mailing form addressed to the Bureau's processing center in New Orleans; it asked for the 100-percent population information on the traveler and anyone from the same address traveling in the same party, provided no one was at the home address to report. The New Orleans clearinghouse received approximately 3,400 OTR's, representing some 6,000 persons; these were distributed to the appropriate district offices where they were coded to ED and block, compared with the census records, and the data added to household questionnaires if not found. The actual number of people added as a result of that search is not known.

Foreign diplomats and U.S. officials—The 1980 census residence rules stipulated, as in the past, that citizens of foreign countries living on the premises of an embassy, legation, chancery, or consulate were not be be enumerated, but those who were living in housing units elsewhere were to be canvassed and included in the census. Special place supervisors in the district offices affected were instructed to delete all listings of diplomatic premises from the controls and address registers. Foreign officials and their staff members on long-term U.S. assignments living in households outside diplomatic compounds were sent household questionnaires as part of the regular census operation, although they were, by virtue of their diplomatic status, immune from prosecution for refusing to respond. To resolve any confusion on the part of these persons, many of whom did not expect to be included in the census, a State Department official acted as an intermediary where necessary.

For the President and the Vice President, household questionnaires were hand-delivered to their offices and processed in the normal manner.

Since the Constitution requires Members of Congress to be residents of their States or congressional districts (a rule similarly applied to Delegates), the Bureau allowed all Members to choose where they wished to be counted in the census—in the Washington metropolitan area or in their respective constituencies.

A congressional control unit was established in the Decennial Census Division (DCD). In February 1980, it mailed each Senator, Representative, and Delegate— 539 in all—a letter explaining the option and requesting the return of a form D-72, "Resident Designation," that was enclosed. This form called for (1) selection of an enumeration residence, and (2) a listing of both the Washington-area and official home addresses. The Member also was asked to complete and return in the usual manner whatever

household questionnaire might be delivered to the Washington-area address at the end of March, and to mark the UHE (usual home elsewhere) box if the official home-State address had been chosen.

As they were received, copies of the resident-designation forms were distributed to the appropriate district offices, where they were geocoded and the address register lines were marked "Congressperson—No followup." When the questionnaires were received, the procedure was as follows.

1. Count in the Washington, DC, area
   a. The household and the housing unit (occupied) were enumerated at the Washington-area address.
   b. The housing unit at the home-State address was classified as "other vacant"unless someone was living in it, in which case it was classified as "occupied."A district office supervisor, using a long- or shortform household questionnaire as specified in the address register, obtained the necessary housing data and also information about any occupants who might not have completed a questionnaire for themselves.
2. Count at the home-State residence
   a. The housing unit at the Washington State residence area address was classified as "vacant— UHE." A district office supervisor obtained missing housing data, if necessary.
   b. Clerks in the district office receiving the Washington-area household questionnaire transcribed the population data to a "UHE search questionnaire" that was sent to a control unit at Bureau headquarters for copying and transmittal to the appropriate district office. (See p. 48.) On arrival at its final destination, a supervisor completed the enumeration at the home-State address as in (1b) above and classified the housing unit there as "occupied."

While ultimately successful and in keeping with established policy, the enumeration (or nonenumeration) of foreign diplomats and U.S. officials required numerous telephone calls to clarify rules and resolve duplication or nonresponse cases.

Alaska—As it had been for the 1970 census, the State of Alaska was divided into two areas, with the northern and western portions[18] enumerated between mid-January and (ideally) the end of February. This time was chosen (1) so it would be possible to complete the census before the spring thaw—travel would be difficult in April—and (2) because the population presumably would be in the villages rather than away fishing or working on construction. (The southern and eastern parts of Alaska were on the same census timetable as the rest of the Nation; they are not discussed here except insofar as special enumeration procedures may have applied there as well.) The assumption about early timing did not prove true in all cases. For example, there was seasonal employment in on-shore and near-shore fish processing in the Aleutians and on Kodiak Island in January (and in April in southeast Alaska). Elsewhere, migrations occurred at various times for hunting, fishing, and herding. In fact, the "early" enumeration was not completed in some places until mid-June. The Governor's Interdepartmental Committee on the 1980 Census and the Alaska Native regional corporations (ANRC's) all contributed to the development of the Bureau's plans for the field operations in 1980.

Because of Federal programs based on population statistics by race, such as the ones specified in the General Revenue Sharing Act and the Indian Self-Determination and Assistance Act of 1975, an important aspect of the census in Alaska was to identify and enumerate, as such, Alaska Natives, i.e., Eskimos, Aleuts, and American Indians. In 1970, a special household questionnaire had been used in Alaska, in which "Aleut" and "Eskimo" had been substituted for 'Hawaiian" and "Korean" in the race question; for 1980, "Aleut" and "Eskimo" appeared on the regular household questionnaire along with "American Indian." Over 60 percent of the Alaska Natives in the State lived on the Annette Islands Reserve (the only American Indian reservation in Alaska) and in over 200 Alaska Native villages (ANV's). The Geography Division identified ANV's based on information from the State government. (The geographic aspects of the census in Alaska are described in ch. 3.) Only three ANV's—Barrow, Bethel, and Kotzebue—had more than 1,000 Alaska Natives, and only seven other villages had between 500 and 1,000 Native population. The supplemental questionnaire for American Indians (see p. 54) was administered in Alaska only on the Annette Islands Reserve, where it was used at households that (1) were enumerated on a short-form questionnaire and (2) had at least one resident Indian.

To prepare for the early enumeration, the Bureau's community services specialists (CSS's; see ch. 4) began recruiting indigenous enumerators for the villages through the ANRC's in the summer of 1979, and the Anchorage district office was opened in November 1979. The CSS's in Nome, Bethel, and Anchorage—all Alaska Natives—and Fairbanks were trained as field operations assistants (FOA's); in mid-December, they opened subdistrict offices, from which home-study, enumeration, and self-appointment materials were sent to some of the crew leaders and enumerators. The rest of the field staff was trained at central locations in mid-January, frequently in a native language as well as in English. Bush pilots, the U.S. mail, and other means were used for pickup and delivery, and short-wave radio or telephone was the more immediate method of communication. Unless the ANRC's had referred them, the crew leaders and enumerators had to pass the written selection-aid test used elsewhere in the country. Each FOA had a manual (D-566) detailing operations in the outlying areas, as did the crew leaders (D-573). Each enumerator received a manual (D-579) designed to cover every possible census situation, including the "T-Night" scheduled for the afternoon of January 21. The enumerators had one or more address registers and ED maps; they were to go from door to door, list the housing units in the address register and spot them on the census map(s), and complete appropriate questionnaires through personal interview.

In general, each enumerator was assigned (1) one or more ED's (one for every estimated 70 people) for the closely settled portion of the assignment area, and (2) one ED for the largely unpopulated "bush" area; some of the latter ED's were larger than the 300 square-mile maximum held in the other 49 States. The enumerators had to be aware of situations unique to their areas. For example, some Alaska Native families might have two residences—one a new housing unit constructed by the Bureau

[18]Called "outlying areas of Alaska," but not to be confused with Guam, the Virgin Islands, etc. (see ch. 11).

of Indian Affairs, and another, older dwelling nearby. If either was used to store household furniture and was not slept in, it was to be classified as "vacant," but if it was used to store nonhousehold goods such as furs, walrus tusks, fish, etc., it was not to be counted at all. Most village children attended secondary-level boarding schools elsewhere, and the enumerators had to be careful to count these children with their respective households, not at the schools.

The crew leaders were to enumerate abandoned villages that had housing units but no population, and to visit each enumerator who could not come to a central site for final review. If there still was work to be done at this time, the crew leader was to stay until it was finished and all ED's passed final review, even if he or she had to complete the census. Sometimes an outside team was needed to finish the census in a given area. Here, it was necessary to choose team members who were of the same racial group as the area's inhabitants, or who were knowledgeable about them. The crew leaders also were to canvass all special places that the enumerators had found, and to calculate and reconcile the population and housing counts for each ED.

FOA's and crew leaders who were pilots and used their own airplanes were reimbursed for flying and flight time; enumerators, likewise, were paid for travel or were reimbursed for the rental of snowmobiles or dogs and sleds. There were special piece and hourly rates paid in Alaska, using a locality cost-of-living adjustment to the stateside rates for centralized district offices. The wage scale for the early census was $5.55 per hour for enumerators and $7.50 an hour for crew leaders.

Fishing vessels, even though oceangoing, were excluded from the census (see "Crews of Maritime Vessels" above), but some of the Alaskan fleets had ships that acted as offshore "floating canneries." To accommodate these, a list was compiled with the aid of the Bureau's Seattle regional office of such "canneries" likely to be in operation in April. The NOPO mailed census materials to them in March, with letters to the masters advising them how to enumerate workers as well as crew members.

A small but significant number of pipeline workers were in camps on the North Slope (of the Brooks Mountain Range) at census time. The Bureau, in consultation with the State government, determined that most of these people had usual residences elsewhere, and asked them to complete ICR's, which a crew leader collected. Only those who did not report a household elsewhere were counted at the campsites.

Except for minor modifications, such as simplified quality-control methods, district office operations in Alaska generally resembled the ones elsewhere in the States. All of Alaska was covered by "conventional" means; mailout/mailback methods were not used. The post-enumeration post office check (PEPOC; see p. 71), a coverage-improvement procedure followed in "conventional" areas, was employed only in Anchorage city and Borough.

The district office provided all the State's general-purpose governmental units (which, for Federal revenue-sharing purposes, included all the ANV's) with preliminary population and housing counts for local review. (See p. 36.) The population counts were not broken down by race. Some jurisdictions had records only for their own native people and had difficulty reconciling the Bureau's figures with their own and responding to the request for comment before the district office closed.

American Indian reservations—American Indians living in the general population have been identified separately since 1860, but those on reservations were not included in the census until 1890. (The 1880 census included a special schedule for reservations, but because of budgetary constraints, it was used only in a few areas and the results were not published. Reservation Indians were omitted from apportionment counts until 1940; prior to that, they fell into the constitutionally excluded category of "Indians, not taxed.")

Information about the name of the tribe and blood quantum was collected in 1890, 1900, 1910, 1930, 1950 (on reservations), and 1970 and 1980 (tribe, but not blood quantum). (The census inquiry on race and tribe is discussed in ch. 12.) These censuses, except for 1970, all used special schedules or questionnaires to gather some of the population data on American Indians, as well as on one or more items asking about Indian housing.[19]

After the 1970 census, members of the Indian community and data users in other Federal agencies focused attention on the accuracy of the counts of Indians on reservations. Even though cohort analysis did not reflect an undercount of this group in 1970, there were significant discrepancies between the census counts and the figures reflected by tribal population registers or tribal rolls. The Bureau of Indian Affairs (BIA), for example, estimated that Navajos might have been undercounted by as much as 27 percent. As a result, the Census Bureau conducted a pilot study on the Navajo reservation in 1976 (see ch. 2) to see whether coverage might be improved by making use of tribal rolls, low-altitude aerial photography to spot dwellings, special publicity to disseminate information about the census, and special recruiting and training for indigenous enumerators. In this particular case, comparing the tribal rolls with the census and following up unmatched cases yielded a 5.3-percent improvement in the enumeration results, but the Bureau found that some 37 percent of the names on the rolls represented persons who either were dead or who lived elsewhere—either in some other jurisdiction or off the reservation. Except for the tribal rolls, the other tested techniques were found helpful and were incorporated into the 1980 census plans.

The other efforts in the 1970's were to develop (1) a program for identifying reservation, subreservation, and tribal trust land boundaries for tabulation purposes (see ch. 3), and (2) a supplementary questionnaire for American Indians to be used in 1980. Their purpose would be to meet the specialized data needs of the various tribes and Federal agencies responsible for the allocation of programs, resources, and funds to the Indian community, both on and off reservations. Users of census data on American Indians felt that the regular household questionnaire did not adequately collect information about the unique living conditions found on many reservations. Although the Federal agencies involved wanted specialized data for all Indians, regardless of location, the Bureau's ultimate decision was to limit this supplementary questionnaire just to specific areas (see below).

Recommendations and guidance on content came from an ad hoc interagency committee; its membership consisted of representatives from the following departments.

[19]The inquiries are reproduced in U.S. Bureau of the Census, *Twenty Censuses: Population and Housing Questions, 1790-1980* (1979).

Commerce (including the Census Bureau)
Health, Education, and Welfare (since 1979, Health and Human Services)
  Indian Health Service
  Social Security Administration
  Office of Indian Education
  Internal Departmental Council on Indian Affairs
  Administration for Native Americans
Housing and Urban Development—Office of Indian Housing
Interior—Bureau of Indian Affairs
Labor
  Bureau of Labor Statistics
  Division of Indian and Native American Programs
Treasury—Office of Revenue Sharing

National and regional American Indian organizations, as well as tribal governments, were contacted with regard to the content of the supplementary questionnaire, and the subject was discussed along with other matters pertaining to the 1980 census in a series of meetings with interested groups of tribal and agency representatives in various parts of the country in 1976, 1977, and 1978 (see ch. 2).

To ensure that the questions were clear and that the proposed procedures would work, the 33-item questionnaire was tested in one of the 1980 census dress rehearsals, conducted in La Plata and Montezuma Counties, CO, in the spring of 1978 (see ch. 2). This area contained the Ute Mountain and Southern Ute Reservations; the former extended into San Juan County, NM, and the latter into Archuleta County, CO; these portions also were included in the test. The Ute Mountain Tribe also had trust lands outside its reservation, but these were not identified for purposes of the test. The entire area was enumerated by conventional methods. On the reservation only, the supplementary questionnaire (form D-15X) was administered in addition to the regular long- or short-form questionnaire at every household that had at least one member who was an American Indian.

After the dress rehearsal, the supplementary questionnaire was revised and a final version (form D-15) was printed for use in 1980. One revision was to eliminate a detailed question on each individual's physical or mental disabilities; another was to omit the question on tribal enrollment number because of a high nonresponse rate and requests by the Indian community for its deletion. Several of the population subjects were already covered in part on the regular household questionnaires, and cuts were made here to reduce respondent burden.

The final 1980 supplementary questionnaire (see app. B in this publication series for facsimile) covered these items.

Population	Housing
Tribal affiliation	Source of water
Tribal enrollment	Public sewer connection
School enrollment	Source of heat
Educational attainment	Year structure built
Year moved to reservation	Complete kitchen facilities
Place of residence 1 year ago	Telephone
Health services received	Electric lighting
Place where health care received	Material used for floors
Time traveled to health care facility	Material for outside walls
Method of payment for health care	
Work last year (1979)	
Reasons for not working a full year in 1979	
Number of weeks spent looking for work	
Year last worked	
Industry	
Craft or occupation	
Class of worker	
Benefits received	
Total income	

So that all pertinent information would appear in one place, the new form provided space for the enumerator to transcribe basic data from the short-form household questionnaire. These were as follows: Population—relationship to householder, sex, race, age, marital status for each person, and total number of persons in the household; housing—number of units at the address, plumbing facilities, number of rooms, tenure, acres and commercial establishment, value of contract rent, and telephone number. (See ch. 12 for descriptions.)

In late 1978, based on the dress-rehearsal experience, it was decided not to use the supplementary questionnaire where a long-form household questionnaire had been completed. The D-15 questionnaire would be administered only at households that (a) were enumerated on the short-form questionnaire, (b) had one or more members who were American Indians, Aleuts, or Eskimos, and (c) were living on a reservation (but not on tribal trust land) or in the historic areas of Oklahoma outside the urbanized parts of that State.[20] If the household qualified, then data would be collected on the supplementary questionnaire for all members, regardless of race.

Urbanized areas in Oklahoma were omitted on the grounds that (1) they were excluded from some Federal programs and (2) living conditions there more resembled those elsewhere in the country than they did reservation conditions, so the regular enumeration would furnish adequate data. The overall reasoning was based on budgetary considerations—there were limited funds even for the supplement on reservations—and the need to reduce the burden on respondents and enumerators; in the dress rehearsal, it took from 45 to 90 minutes to conduct each interview. Individual trust lands were left out for other reasons as well: They were not necessarily adjacent to the reservations, and they generally consisted of scattered landholdings that made it impossible to designate specific ED's with boundaries for each trust land, or even to show the trust lands with any meaningful definition on the census maps.

Preparations—From the summer of 1979 through early 1980, the Data Preparation Division prepared office and ED maps covering 278 Federal and State reservations (see ch. 3), including 3 that were jointly administered/claimed areas and excluding 1 tribe whose landholdings comprised only trust lands. Paper copies of aerial photographs were pieced together to serve as enumeration maps for 20 reservations where the State highway maps of counties were inadequate or where there were complex trail and/or road patterns and/or difficult topography. The division delineated "N" ED's ("N" for "Indian"—an "I" could have been confused with the digit "1") that conformed to the official reservation boundaries; these contained up to an estimated 70 housing units each. "A" ED's

[20]The historic areas of Oklahoma consisted of the former reservation that had legally established boundaries during 1900-1907. These reservations were dissolved during the 2- to 3-year period preceding Oklahoma statehood in 1907, but the tribes and the Federal Government continued to use the boundaries for planning purposes. In the 1980 census (not before), the entire area encompassing the former reservations was identified (excluding the potential outermost extent of urbanized areas) as a single unit, but the individual former reservations were not distinguished separately. In 1980, there was one official reservation in Oklahoma, the Osage. The urbanized parts of the historic areas were principally in or near Lawton, Oklahoma City, and Tulsa, and adjacent to Fort Smith, AR. For a map, see 1980 Census of Population, Supplementary Report PC80-S1-13, *American Indian Areas and Alaska Native Villages: 1980* (December 1983).

("A" for "adjacent") were delineated to encompass both off-reservation Indian subreservation areas (ISA's) and areas that contained tribal trust lands. The boundaries for "A" ED's containing trust lands followed visible features and, because the trust lands were in checkerboard patterns or scattered small landholdings (generally ranging from 10 acres to half a square mile), included non-Indian lands as well. Individual (as distinguished from tribal) trust lands were not recognized in the 1980 census. A total of 228 ISA's were identified for 21 reservations, and 36 reservations had tribal trust lands associated with them. In the historic areas of Oklahoma, all ED's except those within the potential extent of an urbanized area were assigned "A" prefixes. Where reservations had block-numbering areas, these were given unique numbers so that the reservation boundaries also served as block boundaries. Where reservations were known to contain nonreservation "inholdings" (nontribal land within the outer reservation boundaries), had unusual shapes, or consisted of discontiguous territory, each geographically separate area was identified as a unique ED. The enumerator would know by the prefix whether or not to administer a supplementary questionnaire: In Oklahoma, this was done in "A" and "N" ED's (the latter being on the Osage reservation); elsewhere, the D-15 form was used only in the "N" ED's. The prefixes also served to identify these particular areas in assigning indigenous enumerators, reporting progress in the census, and tabulating the data.

Insofar as possible, the district offices, with the assistance of the community services specialists and tribal officials, recruited, tested, and hired indigenous field operations assistants (FOA's), crew leaders, and enumerators. The district offices involved were required to submit special written progress reports on recruiting, tribal cooperation, and any other concerns regarding Indian enumeration every 3 weeks, beginning at the end of March. Most offices complied with this request at least twice.

Training did not differ substantially from that provided elsewhere in the country (see p. 17), except that some of the presentations had to be interpreted, particularly where the enumerators would need to phrase questions in a native language. There also was some training in how to read aerial maps, augmented with illustrations in an Indian supplement (D-549N) to the enumerator's manual in conventional areas. For reference purposes in addition to the standard materials, the field staff received a reference book (D-561A) explaining each item on the supplementary questionnaire, supplements for the Oklahoma historic areas (D-548K [enumerators] and D-554K [crew leaders]), and, elsewhere, supplements (D-554N [decentralized] and D-555N [conventional]) to the crew leader's manual. Special-place crew leaders' and enumerators' training was similarly adapted, insofar as it related to housing units.

Most of the reservations were in "conventional" census areas, and the enumeration procedures there were fairly straightforward, although sometimes more difficult to follow because of language barriers and long distances between housing units. A subdistrict office was established in Chinle, AZ, to oversee operations on the Navajo reservation, most of which was in Arizona but extended into southeastern Utah and northwestern New Mexico. Because of these interstate divisions, the reservation and the Chinle suboffice fell under several census jurisdictions—three district offices (Provo, UT, Flagstaff, AZ, and Las Vegas, NM) and two regional offices (Denver, for New Mexico and Arizona, and Seattle, for Utah)—which complicated supervision and supply channels.

To make the enumeration on all the reservations and in the Oklahoma historic areas as uniform as possible and in the same time period (beginning March 31), procedures had to be modified for ED's located in mail census areas. This was done as follows.

1. In ED's designated for prelisting, but where housing units—such as in resort areas—were found not to have house numbers and/or street names, the prelist enumerator would mark this cluster of units on a map. The regular crew leader then would list all the units prior to March 31, and the enumerator would follow and take the census. The households did not receive any questionnaires in the mail. Cluster listing also was used in "N" ED's that had good mailing addresses but where the tribal authorities requested a conventional (i.e., not by mail) census.
2. In "N" ED's that were prelisted, a special letter was inserted in each short-form mailing package, instructing the respondent to hold the completed questionnaire for the enumerator's visit rather than mail it back. No return envelope was provided.
3. In the historic-area "A" ED's and in "N" ED's located in TAR (tape address register) areas, householders received the standard short or long-form mailing package, to be handled in the usual manner. Original plans called for the enumerator to administer the supplementary questionnaire in followup 1 for nonresponse cases, or in followup 2 if an Indian household returned a short-form questionnaire. Subsequently, in the interest of uniform timing, the procedure was changed so that all the interviewing with the supplementary questionnaire was done during followup 1. The enumerator would know from the address register which units had received short-form questionnaires, but might not know whether they had been mailed back or even if the units had American Indian, Aleut, or Eskimo occupants. In these cases, the short-form information would be collected again when the supplementary questionnaire was completed.

Collecting the data—Separate progress reports were required for "N" ED's, for which enumeration was supposed to be completed by the end of followup 1, or May 16. Less than a third of the district offices had finished with their reservation ED's by then, and the last one was done in early September. In some Oklahoma offices, interviewing for supplementary questionnaires was postponed until followup 2 because of delays in completing followup 1 for the regular mail census. There were time-schedule changes elsewhere as well, caused by lack of staff and a shortage of supplementary questionnaires; these latter had to be reprinted, and some offices did not receive additional supplies of them until the end of April.

An insufficient number of long-form household questionnaires were collected on three reservations, thus affecting the

tabulation and quality of sample data, and none at all were turned in from two other reservations. For three tribes in New York State, the Bureau had to obtain population and housing counts from tribal rolls through the Freedom of Information Act or from State administrative records because census questionnaires were not forthcoming.

The "Were You Counted?" campaign (see p. 49) extended to the reservations, with the D-25 forms printed in Navajo and English; there also were D-760 posters, "April 1 Is Census Day, Make Sure You're Counted!," in Navajo and English, and D-766 "It's Not Too Late" brochures in English only.

When they were received in the district offices, the regular household questionnaires were edited (reviewed for consistency) and processed in the usual manner (see pp. 52 ff.). One step was added: Where the edit clerks had mailed-in D-1 short-form questionnaires from an Indian area (i.e., an "N" ED, or an "A" ED in the Oklahoma historic areas), they searched the race entries for American Indian, Aleut, or Eskimo household members. Where found, they transcribed the basic data (see p. 52) from the D-1 forms to D-15 supplementary questionnaires for the enumerators to use on their rounds. (Enumerators who turned in both D-1 and D-15 questionnaires were supposed to have transcribed the data themselves.) There were no funds for editing the supplementary questionnaires in the district offices, so that operation was left to the processing centers; however, crew leaders were to reject any D-15's that did not contain at least the "last resort" information (see p. 66) transcribed from the D-1 form.

In general, district office personnel found the supplementary questionnaire difficult to administer, with poor-quality response, and disruptive of the regular census operation. Locally and regionally, groups with substantial Indian populations outside the supplementary areas felt discriminated against, even though they may have seen the necessity to limit the supplement's coverage for budgetary reasons.

Local review—For the local review program, the Census Bureau provided the tribal governments, as it did for all general-purpose governments (see p. 36), preliminary counts, by ED, of housing units and total and group-quarters population living on the reservations and other areas of tribal government jurisdiction. As many tribal authorities' own counts for comparison came from tribal rolls, which only covered Indians and included persons living off the reservation, local review frequently was disappointing to both the Bureau and the tribes.

Appendix 5A. District Offices by Regional Office and Census Procedure

(Except as noted on page 7, all decentralized, centralized, and "two-procedure" offices opened officially on January 2, and conventional offices on January 28. Two-procedure offices are listed twice [under their respective code numbers] and identified by an asterisk)

Office	Code number	Date closed
BOSTON, MA (RO)	2100	(X)
Decentralized:		
Framingham, MA	2101	8/27
Quincy, MA	2102	8/29
Brockton, MA	2103	8/25
New Bedford, MA*	2104	8/26
Lawrence, MA	2105	9/4
Lowell, MA	2106	8/27
Worcester, MA	2107	9/12
Springfield, MA	2108	9/5
Cranston, RI	2109	8/22
Norwich, CT	2110	8/22
Waterbury, CT	2111	9/12
Hartford, CT	2112	9/1
Poughkeepsie, NY	2113	9/8
Albany, NY	2114	9/12
Utica, NY	2115	9/8
Binghamton, NY	2116	8/25
Jamestown, NY	2117	9/3
Buffalo, NY	2118	8/27
Batavia, NY	2119	8/29
Rochester, NY	2120	8/28
Syracuse, NY	2121	9/4
Plattsburgh, NY	2122	9/8
Burlington, VT	2123	8/30
Concord, NH	2124	8/27
Portsmouth, NH	2125	8/14
Portland, ME	2126	9/9
Centralized:		
Boston, MA	2140	9/10
S Boston, MA	2141	9/9
Cambridge, MA	2142	8/29
Providence, RI	2143	8/21
Hartford, CT	2144	8/7
New Haven, CT	2145	8/23
Bridgeport, CT	2146	8/19
Buffalo, NY	2147	8/19
BOSTON, MA (RO)—Con.		
Conventional:		
New Bedford, MA*	2180	8/25
Bangor, ME	2181	8/19
NEW YORK, NY (RO)	2200	(X)
Decentralized:		
SW Brooklyn, NY	2201	9/17
NE Queens, NY	2202	10/17
W Queens, NY	2203	10/10
S Nassau, NY	2204	9/30
Westbury, NY	2205	10/7
Babylon, NY	2206	9/8
Riverhead, NY	2207	10/3
Yonkers, NY	2208	10/17
Newburg, NY	2209	9/17
Hasbrouck, NJ	2210	9/12
Morristown, NJ	2211	9/9
Orange, NJ	2212	10/6
Elizabeth, NJ	2213	9/12
Woodbridge, NJ	2214	9/17
Centralized:		
N Manhattan, NY	2240	10/6
NE Manhattan, NY	2241	10/31
E Manhattan, NY	2242	9/25
S Manhattan, NY	2243	10/1
W Manhattan, NY	2244	9/30
S Bronx, NY	2245	9/30
E Bronx, NY	2246	10/6
NW Bronx, NY	2247	10/8
SW Bronx, NY	2248	10/17
NW Queens, NY	2249	9/12
SE Queens, NY	2250	10/26
NW Brooklyn, NY	2251	9/24

See footnote at end of table.

Office	Code number	Date closed
NEW YORK, NY (RO)—Con.		
Centralized—Con.		
NC Brooklyn, NY	2252	12/17
NE Brooklyn, NY	2253	9/22
C Brooklyn, NY	2254	10/31
S Brooklyn, NY	2255	10/6
SE Brooklyn, NY	2256	10/27
Jersey City, NJ	2257	9/8
Newark, NJ	2258	10/14
North Bergen, NJ	2259	9/8
Paterson, NJ	2260	10/10
PHILADELPHIA, PA (RO)	2300	(X)
Decentralized:		
Media, PA	2301	9/9
Norristown, PA	2302	9/25
Doylestown, PA	2303	9/10
Reading, PA	2304	9/2
Westchester, PA	2305	9/12
Harrisburg, PA	2306	9/19
Altoona, PA	2307	9/4
Greensburg, PA	2308	8/25
Pittsburgh E, PA	2309	9/15
Pittsburgh W, PA	2310	8/25
Washington, PA	2311	9/8
Warren, PA	2312	9/19
Indiana, PA	2313	9/12
Williamsport, PA	2314	9/19
Scranton, PA	2315	9/23
Princeton, NJ	2316	9/19
Eatontown, NJ	2317	9/17
Willingboro, NJ	2318	9/12
Pleasantville, NJ	2319	9/12
Vineland, NJ	2320	9/8
Dover, DE/MD	2321	9/2
Baltimore, MD	2323	9/1
Annapolis, MD	2324	8/30
Forestville, MD	2325	9/10
Rockville, MD	2326	8/30
Hagerstown, MD	2327	9/2
Centralized:		
NE Philadelphia, PA	2340	8/19
N Philadelphia E, PA	2341	8/23
N Philadelphia W, PA	2342	9/1
S Philadelphia, PA	2343	8/19
W Philadelphia, PA	2344	9/2
PHILADELPHIA, PA (RO)—Con.		
Centralized—Con.		
Pittsburgh, PA	2345	9/1
Cherry Hill, NJ	2346	8/28
Wilmington, DE	2347	8/21
E Baltimore, MD	2348	9/4
W Baltimore, MD	2349	9/3
DETROIT, MI (RO)	2400	(X)
Decentralized:		
Dearborn, MI	2401	9/8
NW Dearborn, MI	2402	8/29
Birmingham, MI	2403	8/26
Warren, MI	2404	8/25
Pontiac, MI	2405	9/8
Flint, MI	2406	8/19
Saginaw, MI	2407	8/22
Mt. Pleasant, MI	2408	9/19
Grand Rapids, MI	2409	9/3
Lansing, MI	2410	9/12
Ann Arbor, MI	2411	9/17
Kalamazoo, MI	2412	9/15
Lima, OH	2413	8/29
Lorain, OH	2414	8/19
Brook Park, OH	2415	8/15
Shaker Heights, OH	2416	9/2
Youngstown, OH	2417	8/25
Akron, OH	2418	9/8
Canton, OH	2419	9/3
Zanesville, OH	2420	9/12
Marion, OH	2421	9/1
W Columbus, OH	2422	9/8
S Dayton, OH	2423	8/20
E Cincinnati, OH	2424	9/8
Chillicothe, OH	2425	9/4
Centralized:		
E Detroit, MI	2440	10/3
N Detroit, MI	2441	10/14
W Detroit, MI	2442	10/14
Toledo, OH	2443	8/15
S Cleveland, OH	2444	10/3
N Cleveland, OH	2445	10/7
Columbus, OH	2446	8/25
Dayton, OH	2447	8/21
Cincinnati, OH	2448	9/10

See footnote at end of table.

Appendix 5A. District Offices by Regional Office and Census Procedure

Office	Code number	Date closed
DETROIT, MI (RO)—Con.		
Conventional:		
Traverse City, MI	2480	8/26
Marquette, MI	2481	8/26
CHICAGO, IL (RO)	2500	(X)
Decentralized:		
Oaklawn, IL	2501	9/16
Des Plaines, IL	2502	9/15
Waukegan, IL	2503	9/16
Rockford, IL	2504	9/16
Elgin, IL	2505	9/19
Wheaton, IL	2506	9/19
Joliet, IL	2507	9/10
Peoria, IL	2508	9/10
Springfield, IL	2509	9/16
Belleville, IL	2510	9/17
Champaign, IL	2511	9/16
Lafayette, IN	2512	9/26
South Bend, IN	2513	9/19
Ft. Wayne, IN	2514	10/3
Muncie, IN	2515	10/3
Indianapolis, IN	2516	9/17
Evansville, IN	2517	9/12
Jeffersonville, IN	2518	9/8
Louisville, KY	2519	9/16
Owensboro, KY	2520	10/3
Bowling Green, KY	2521	10/6
Lexington, KY	2522	9/12
Richmond, KY	2523	9/22
Ashland, KY	2524	9/25
Centralized:		
C Chicago, IL	2540	9/17
SEC Chicago, IL	2541	10/3
WC Chicago, IL	2542	9/22
SWC Chicago, IL	2543	9/4
SW Chicago, IL	2544	9/8
SE Chicago, IL	2545	9/17
NEC Chicago, IL	2546	9/12
NWC Chicago, IL	2547	10/6
NW Chicago, IL	2548	9/5
NE Chicago, IL	2549	9/15
East St. Louis, IL	2550	9/12
Gary, IN	2551	9/4
Indianapolis, IN	2552	10/3
Louisville, KY	2553	9/4

Office	Code number	Date closed
KANSAS CITY, KS (RO)	2600	(X)
Decentralized:		
Kansas City, KS	2601	9/19
Topeka, KS	2602	9/12
Wichita, KS	2603	8/29
E Kansas City, MO	2604	9/1
Springfield, MO	2605	9/24
Cape Girardeau, MO	2606	9/17
S St. Louis, MO	2607	9/25
N St. Louis, MO	2608	9/4
St. Charles, MO	2609	9/16
Columbia, MO	2610	10/6
Davenport, IA	2611	9/2
Cedar Rapids, IA	2612	9/30
Des Moines, IA	2613	8/20
Sioux City, IA	2614	8/26
Waterloo, IA	2615	9/4
Rochester, MN	2616	9/24
Mankato, MN	2617	9/1
St. Cloud, MN	2618	9/16
Minneapolis, MN	2619	9/17
St. Paul, MN	2620	9/17
Duluth, MN*	2621	8/15
LaCrosse, WI	2622	9/4
Madison, WI	2623	9/16
Waukesha, WI	2624	9/12
N Milwaukee, WI	2625	9/23
Green Bay, WI	2626	9/23
Eau Claire, WI	2627	8/27
Superior, WI*	2628	8/21
Centralized:		
Kansas City, MO	2640	9/2
St. Louis, MO	2641	9/10
Milwaukee, WI	2642	9/24
Conventional:		
Hays, KS	2680	10/6
Bemidji, MN	2681	8/22
Duluth, MN*	2682	8/15
Superior, WI*	2683	8/21
SEATTLE, WA (RO)	2700	(X)
Decentralized:		
N Seattle, WA	2701	9/25
S Seattle, WA	2702	9/16

See footnote at end of table.

Office	Code number	Date closed
SEATTLE, WA (RO) —Con.		
Decentralized—Con.		
Tacoma, WA	2703	9/12
Olympia, WA	2704	9/9
Yakima, WA	2705	9/23
Bellingham, WA	2706	9/8
Spokane, WA*	2707	8/19
Portland, OR	2708	9/10
Salem, OR	2709	9/9
Eugene, OR	2710	9/12
Reno, NV*	2711	9/15
Las Vegas, NV	2712	9/9
Boise, ID	2713	9/8
Ogden, UT	2714	8/22
Salt Lake City, UT	2715	9/15
Provo, UT*	2716	8/20
Great Falls, MT*	2717	8/20
Billings, MT*	2718	8/20
Fargo, ND*	2719	8/20
Conventional:		
Spokane, WA*	2780	8/19
Bend, OR	2781	8/30
Reno, NV*	2782	9/1
Lewiston, ID	2783	8/20
Idaho Falls, ID	2784	8/14
Provo, UT*	2785	8/20
Great Falls, MT*	2786	8/22
Billings, MT*	2787	8/20
Bismarck, ND	2788	8/20
Fargo, ND*	2789	8/19
Anchorage, AK	2790	9/23
CHARLOTTE, NC (RO)	2800	(X)
Decentralized:		
Charlotte, NC	2801	9/11
Asheville, NC	2802	9/12
Hickory, NC	2803	8/28
Winston-Salem, NC	2804	9/9
Greensboro, NC	2805	9/12
Raleigh, NC	2806	9/24
Greenville, NC	2807	9/10
Wilmington, NC	2808	9/1
Fayetteville, NC	2809	9/1
Florence, SC	2810	9/12
Charleston, SC	2811	9/17
Columbia, SC	2812	9/12
CHARLOTTE, NC (RO) —Con.		
Decentralized—Con.		
Spartanburg, SC	2813	9/12
Greenville, SC	2814	9/16
Norfolk, VA	2815	9/12
Newport News, VA	2816	9/12
Petersburg, VA	2817	9/12
Bristol, VA	2818	9/12
Lynchburg, VA	2819	9/10
Fredericksburg, VA	2820	9/12
Alexandria, VA	2821	9/12
Fairfax, VA	2822	8/20
Elkins, WV	2823	8/23
Wheeling, WV	2824	9/8
Charleston, WV	2825	9/12
Beckley, WV	2826	9/3
Centralized		
Richmond, VA	2840	8/26
NW Washington, DC	2841	9/9
SE Washington, DC	2842	9/2
ATLANTA, GA (RO)	2900	(X)
Decentralized:		
Decatur, GA	2901	9/12
Marietta, GA	2902	9/10
Rome, GA	2903	9/1
Gainesville, GA	2904	9/10
Augusta, GA	2905	9/10
Columbus, GA	2906	9/23
Albany, GA	2907	9/8
Savannah, GA	2908	9/5
Ft. Walton Beach, FL	2909	9/16
Tallahassee, FL	2910	9/17
Jacksonville, FL	2911	9/3
Daytona Beach, FL	2912	9/17
Orlando, FL	2913	9/23
Lakeland, FL	2914	9/8
Tampa, FL	2915	9/10
St. Petersburg, FL	2916	9/17
Sarasota, FL	2917	9/16
West Palm Beach, FL	2918	9/10
Ft. Lauderdale, FL	2919	9/25
N Miami, FL	2920	9/17
S Miami, FL	2921	10/7
Mobile, AL	2922	9/19
Montgomery, AL	2923	9/12

See footnote at end of table.

Appendix 5A. District Offices by Regional Office and Census Procedure

Office	Code number	Date closed
ATLANTA, GA (RO)—Con.		
Decentralized—Con.		
Tuscaloosa, AL	2924	9/12
Birmingham, AL	2925	9/2
Anniston, AL	2926	9/5
Huntsville, AL	2927	9/8
Chattanooga, TN	2928	9/10
Johnson City, TN	2929	9/16
Knoxville, TN	2930	9/15
Nashville, TN	2931	9/25
Murfreesboro, TN	2932	9/9
Jackson, TN	2933	9/5
Memphis, TN	2934	9/4
Centralized:		
Atlanta, GA	2940	9/3
Memphis, TN	2941	8/27
Miami, FL	2942	9/17
DALLAS, TX (RO)	3000	(X)
Decentralized:		
E Dallas, TX	3001	9/22
Ft. Worth, TX	3002	9/15
N Dallas, TX	3003	9/19
Tyler, TX	3004	9/30
Waco, TX	3005	9/9
Austin, TX	3006	9/13
Abilene, TX	3007	9/15
Amarillo, TX	3008	9/19
Lubbock, TX	3009	9/19
El Paso, TX	3010	8/28
Laredo, TX	3011	9/15
Corpus Christi, TX	3012	9/30
C San Antonio, TX	3013	9/12
San Antonio, TX	3014	9/13
W Houston, TX	3015	9/30
N Houston, TX	3016	9/26
S Houston, TX	3017	9/26
Beaumont, TX	3018	9/16
Lake Charles, LA	3019	9/17
Lafayette, LA	3020	9/23
New Orleans, LA	3021	9/12
Baton Rouge, LA	3022	9/16
Monroe, LA	3023	9/8
Shreveport, LA	3024	9/16
Pine Bluff, AR	3025	9/8
Little Rock, AR	3026	9/8
Ft. Smith, AR	3027	9/12

Office	Code number	Date closed
DALLAS, TX (RO)—Con.		
Decentralized:		
Jonesboro, AR	3028	8/25
Greenville, MS	3029	8/27
Columbus, MS	3030	9/16
Jackson, MS	3031	9/15
Hattiesburg, MS	3032	9/5
Centralized:		
Dallas, TX	3040	9/17
Houston, TX	3041	9/24
N New Orleans, LA	3042	8/21
S New Orleans, LA	3043	8/19
Conventional:		
Pecos, TX	3080	8/27
DENVER, CO (RO)	3100	(X)
Decentralized:		
Lakewood, CO	3101	8/30
Colorado Springs, CO	3102	8/23
Boulder, CO*	3103	9/16
Ft. Collins, CO*	3104	9/8
Albuquerque, NM	3105	9/17
Tucson, AZ	3106	9/3
Tempe, AZ	3107	9/9
W Phoenix, AZ	3108	9/4
Sioux Falls, SD*	3109	7/29
Lincoln, NE	3110	9/10
Tulsa, OK	3111	9/17
Muskogee, OK	3112	9/10
Lawton, OK	3113	9/16
Oklahoma City, OK	3114	9/16
Enid, OK	3115	9/12
Centralized:		
Denver, CO	3140	9/15
Phoenix, AZ	3141	9/8
Omaha, NE	3142	7/29
Conventional:		
Boulder, CO*	3180	8/20
Ft. Collins, CO*	3181	9/10
Alamosa, CO	3182	8/25
Las Vegas, NM	3183	9/24

See footnote at end of table.

Office	Code number	Date closed
DENVER, CO (RO)—Con.		
Conventional—Con.		
Las Cruces, NM	3184	8/27
Flagstaff, AZ	3185	9/19
Chinle, AZ (suboff.)	—	9/12
Prescott, AZ	3186	9/8
Casper, WY	3187	8/27
Pierre, SD	3188	7/29
Sioux Falls, SD*	3189	7/29
North Platte, NE	3190	8/26
Grand Island, NE	3191	8/16
LOS ANGELES, CA (RO)	3200	(X)
Decentralized:		
Torrance, CA	3201	9/15
W Los Angeles, CA	3202	9/15
Burbank, CA	3203	9/9
Pasadena, CA	3204	8/27
West Covina, CA	3205	9/1
Downey-Norwalk, CA	3206	9/2
Long Beach, CA	3207	9/15
Van Nuys, CA	3208	8/27
Laguna Niguel, CA	3209	9/19
Anaheim, CA	3210	9/16
Garden Grove, CA	3211	9/25
N San Diego, CA	3212	9/1
C San Diego, CA	3213	9/5
El Cajon, CA	3214	9/8
Riverside, CA	3215	9/26
San Bernardino, CA	3216	9/9
LOS ANGELES, CA (RO)—Con.		
Decentralized—Con.		
Oxnard, CA	3217	9/8
Bakersfield, CA	3218	9/26
Fresno, CA	3219	9/19
Salinas, CA	3220	9/19
San Jose, CA	3221	9/23
Sunnyvale, CA	3222	9/15
San Mateo, CA	3223	9/23
Stockton, CA	3224	9/9
Concord, CA	3225	9/8
Vallejo, CA	3226	9/23
Sacramento, CA	3227	9/10
Davis, CA	3228	9/8
Honolulu, HI	3229	9/5
Centralized:		
C Los Angeles, CA	3240	9/16
SC Los Angeles, CA	3241	9/8
E Los Angeles, CA	3242	9/15
Compton, CA	3243	8/29
Hollywood, CA	3244	8/14
Oakland, CA	3245	8/26
Berkeley, CA	3246	8/30
S San Francisco, CA	3247	9/8
N San Francisco, CA	3248	9/4
Conventional:		
Madera, CA	3280	8/20
Redding, CA	3281	7/29
Eureka, CA	3282	8/7
Waipahu, HI	3283	8/7

(X) Not applicable.

Appendix 5B. List of Public- and Field-Use Forms for the 50 States and the District of Columbia.

(For Puerto Rico and outlying areas, see ch. 11)

Series and form number	Title or description
D-1	Questionnaire: 1980 Census, short form
D-1S	Questionnaire: 1980 Census, short form (Spanish version)
D-2	Questionnaire: 1980 Census, long form
D-2S	Questionnaire: 1980 Census, long form (Spanish version)
D-3	Instruction sheet: 1980 Census, short form
D-3S	1980 census short form instruction guide (Spanish version)
D-4	Instruction sheet: 1980 Census, long form
D-4S	1980 census long form instruction guide (Spanish version)
D-5	Not used
D-6	Envelope: outgoing for D-1 questionnaire
D-6S	Envelope: outgoing for D-1 qeustionnaire (Spanish version)
D-7	Envelope: outgoing for D-2 questionnaire
D-7S	Envelope: outgoing for D-2 questionnaire (Spanish version)
D-8	Envelope: return for D-1 and D-2 questionnaire
D-9	Reminder card
D-10A	Envelope: return for D-11 and D-12 (CLEWS)
D-10B	Envelope: return for D-1904 and D-1905
D-10C	Envelope: return for D-1908 and D-1909
D-11	Questionnaire: 1980 Census, short form (trace sample)
D-12	Questionnaire: 1980 Census, long form (trace sample)
D-13	Questionnaire: 1980 Census, advance census report
D-14	Notice to respondent in dual mailing of Spanish and English questionnaires
D-15	Supplementary questionnaire for American Indians
D-16	Flyer: ''Complete but do not mail census form''
D-17	Not used
D-18	Not used
D-19	Not used
D-20	Individual census report
D-20S	Individual census report (Spanish version)
D-21	Military census report
D-22	Special place poster
D-23	Shipboard census report
D-24	Not used
D-25	Questionnaire: Were You Counted?
D-25	''Were You Counted?'' form (followed by name of language): Arabic, Armenian, Bulgarian, Cambodian, Cebuano, Chinese, Croatian, Czech, Estonian, French, German, Greek, Hungarian, Ilocano, Italian, Japanese, Korean, Laotian, Latvian, Lithuanian, Navajo, Persian, Polish, Portuguese, Russian, Samoan, Serbo-Croatian, Slovene, Tagalog, Ukrainian, Vietnamese, Yiddish
D-25A	''Were You Counted?'' form—cancelled
D-25S	Questionnaire: Were You Counted? (Spanish version)
D-26	Census appointment record
D-27	Introduction for Spanish-speaking respondents
D-28	Not used
D-29	Overseas traveler's report
D-30	Letter: advance notification to special places
D-31	Privacy Act notice, prelist
D-31S	Privacy Act notice (Spanish version)

Series and form number	Title or description
D-40	Envelope: leave-it for individual census report
D-40S	Envelope: leave-it for individual census report (Spanish version)
D-41	Envelope: outgoing, for T-Night package
D-42	Envelope: return, for T-Night package
D-43	Envelope: leave-it for housing units at special places
D-60	Foreign language guide (followed by name of language): Arabic, Armenian, Bulgarian, Cambodian, Cebuano, Chinese, Croatian, Czech, Estonian, French, German, Greek, Hungarian, Ilocano, Italian, Japanese, Korean, Laotian, Latvian, Lithuanian, Navajo, Persian, Polish, Portuguese, Russian, Samoan, Serbian, Slovene, Tagalog, Ukrainian, Vietnamese, Yiddish
D-61	Information copy, 1980 census questionnaire
D-70	Local review informational booklet
D-71	Questionnaire: local review program response
D-72	Resident designation for Members of the U.S. Congress
D-73	Technical guide for the 1980 census local review program
D-74	Local review program response
D-75	Letter: local review change
D-76	Transmittal letter: revised local review program
D-77	Revised local review program information booklet
D-98	1980 census publication clearance slip
D-99	Request for observation of district office activities (used by members of Census Advisory Committees)
D-101	Prelist address register
D-101A	Address listing page
D-101A (HSP)	Address listing page (high-speed printer)
D-101A.1	Prelist address listing page (add page)
D-101B	Special place listing page
D-101B (HSP)	Special place listing page (high-speed printer)
D-101B.1	Prelist special place listing page (add page)
D-101C	Callback record page
D-102	Master address register (cover)
D-102A	Address listing page
D-102B	Special place listing page
D-103	Precanvass address register (cover)
D-103A	Precanvass address listing page
D-104 (1/6 area)	Conventional address register (1/6 sample area)
D-104 (3/6 area)	Conventional address register (3/6 sample area)
D-104A (1/6 area)	Conventional address listing page (1/6 sample area)
D-104A (3/6 area)	Conventional address listing page (3/6 sample area)
D-104B	Conventional special place listing page
D-104B.1	Conventional special place listing page (add page)
D-104C	Conventional address listing page (add page)
D-104P	Label: population and housing register totals
D-105	Prelist address register for special places (cover)
D-105A	Prelist address listing page for special places
D-106	Followup address register (cover)
D-106P	Label: population and housing register totals
D-107	Map backing and sketch sheet
D-108	Address register control label
D-112	Privacy Act notice
D-114	Report of boundary discrepancy
D-115	Special place enumerator progress record—cancelled
D-116A	Special place sample selection book (1/6 sample)
D-116B	Special place sample selection book (3/6 sample)
D-117	Casual interview production record

Appendix 5B. List of Public- and Field-Use Forms for the 50 States and the District of Columbia

Series and form number	Title or description
D-119	Label: special place crew leader's notebook of forms (kit 572A)
D-120	Acknowledgment of receipt of census materials
D-121	List of self-enumerating group-quarters military installations
D-122	Living-quarters report of persons enumerated
D-123	List of persons in group quarters not receiving MCR's
D-124	List of military installation units
D-125	Enumeration control by activity of U.S. military and Coast Guard crews of ships
D-126	Enumeration control of U.S. military and Coast Guard crews of ships
D-127	Transmittal letter to military ships' commanders
D-128	Enumeration control for group quarters, self-enumerating hospitals and prisons
D-129	Letter: transmittal of 1980 census materials to maritime owners/ or operators
D-130-21 through D-130-32	Envelope: kraft, 3-7/8'' x 8-7/8''; left window 1-1/8'' x 4-1/2''; with regional census center return address
D-139-21 through D-139-32	Envelope: white, 3-7/8'' x 8-7/8''; left window 1-1/8'' x 4''; with regional census center return address
D-140-21 through D-140-32	Envelope: white, 3-5/8'' x 8-3/8'', with regional census center return address and indicia, no preaddress
D-140-21 through D-141-32	Envelope: white, 3-7/8'' x 8-7/8'', with regional census center return address and indicia, no return address and indicia, no preaddress
D-142-21 through D-142-32	Envelope: same as D-141 except with right window through
D-143-21 through D-143-32	Envelope: kraft, 9-1/2'' x 12-1/2'', with regional census center return address and indicia, no preaddress
D-144-21 through D-144-32	Envelope: kraft, 11-1/4'' x 16-1/4'', with regional census center return address and indicia, no preaddress
D-145-21 through D-145-32	Mailing label: self-adhesive, 3'' x 5'', with regional census center return address and indicia
D-146-21 through D-146-32	Mailing label: White, self-adhesive, 3'' x 5'', with regional census center return address, Government bill of lading
D-147	Mailing label: census district office in return and address block
D-148	Census questionnaire worksheet
D-148S	Census questionnaire worksheet (Spanish version)
D-149	Label: for kit No. 25, crew leader's standard notebook of forms
D-150	Label: for kit No. 25A, crew leader's standard notebook of forms
D-151	List of ED numbers of crew leaders district
D-152	Crew leader record of assignments
D-153	Crew leader record of progress
D-154	Crew leader production record
D-155	Team enumeration assignment record
D-156	Precanvass apartment nonmatch record
D-157	Transmittal of followup 1 questionnaires, test validation study
D-158	Record of reinterview

Series and form number	Title or description
D-160	Unit status review
D-163	Crew leader checklist for preparatory work (D-CT)
D-164	Crew leader checklist for preparatory work
D-165	Crew leader checklist for preparatory work
D-166	Record of oversized ED's
D-167	Report of oversized ED's (conventional)
D-169	Listing and matching record
D-169A	Summary of advance listing and matching
D-170	Quality control enumerator daily progress record
D-170A	Quality control production record
D-171	Last resort information
D-172	Last resort information chart
D-173	Long-form last resort information
D-175	Transmittal: enumerator's work
D-175A	Transmittal: quality control enumerator's work
D-176	Transmittal: enumerator's work, followup 2
D-177	Checklist for releasing an employee
D-178	Record of first review (crew leader's)
D-179	Record of final review (crew leader's)
D-179A	Record of final review, outlying areas of Alaska
D-180	Special place assignment record
D-181	Special place field review checklist
D-183	List of special places in crew leader district
D-186	Record of search for potential delete
D-187	Record of search for potential add
D-188	Local review assignment record
D-197	Recruiting source record
D-198	Weekly recruiting progress
D-199	Regional recruiting summary
D-200	Office employee identification card
D-200A	Census office visitor identification card
D-201.1	Prelist office authorization, wave I
D-201.2	Prelist office authorization, wave 2
D-201.3	Prelist office authorization, wave 3
D-201.4	Prelist office authorization, wave 4
D-201.5	Prelist office authorization, wave 5—cancelled
D-202	District office authorization and manager's fiscal control, centralized
D-203	District office authorization and manager's fiscal control, decentralized
D-204	District office authorization and manager's fiscal control, conventional
D-205	Operation code numbers and titles
D-206	Manual: Operation code numbers and titles, centralized
D-207	Manual: Operation code numbers and titles, decentralized
D-208	Manual: Operation code numbers and titles, conventional
D-209A	Prelist waves 1 and 2 staffing calendar
D-209B	Prelist waves 3 and 4 staffing calendar
D-209C	Prelist wave 5 staffing calendar—cancelled
D-210	Staffing calendar, centralized
D-210LL	Staffing calendar, centralized with update list/leave
D-211	Staffing calendar, decentralized
D-211LL	Staffing calendar, decentralized with update list/leave

Appendix 5B. List of Public- and Field-Use Forms for the 50 States and the District of Columbia

Series and form number	Title or description
D-213	Staffing calendar, conventional
D-214	District office schedule of operations, prelist
D-214A	District office schedule of operations, prelist wave 5—cancelled
D-215C	Recruiting poster: "Take a temporary job" (Chinese version)
D-215S	Recruiting poster: "Take a temporary job" (Spanish version)
D-216	Manual: District office schedule of operations, centralized
D-217	Manual: District office schedule of operations, decentralized
D-219	Manual: District office schedule of operations, conventional
D-221	Desk blotter, centralized
D-222	Desk blotter, decentralized
D-223	Desk blotter, conventional
D-224	Flow chart of census questionnaires and address registers, centralized
D-225	Flow chart of census questionnaires and address registers, decentralized
D-230	Checklist of forms, prelist
D-231	Checklist of forms, centralized
D-232	Checklist of forms, decentralized (urban)
D-233	Checklist of forms, conventional
D-234	Manual: Checklist for opening the district office
D-235	District office supply requirements, prelist
D-236	District office supply requirements, centralized
D-237	District office supply requirements, decentralized (urban)
D-238	District office supply requirements, conventional
D-239	Sign: Questionnaire assistance
D-240	Manual: Kits supply and training, prelist
D-244	Supply bin tags, prelist
D-245	Supply bin tags, conventional
D-246	Supply bin tags, decentralized
D-247	Supply bin tags, centralized
D-248	Sign: District office
D-249	Sign: "Restricted" office
D-250	Transmittal
D-251	Shipping memorandum book, centralized
D-252	Shipping memorandum book, decentralized—cancelled
D-253	Shipping memorandum book, conventional—cancelled
D-254	Label: Indian ED
D-255	ED control listing
D-256	Prelist operations flow chart
D-257	Regional and district office boundaries for the 1980 census
D-258	Receipt for U.S. Government property
D-259	Label: ED identification
D-260	Poster: "Help make everyone count"
D-260S	Poster: "Help make everyone count" (Spanish version)
D-260A	Postcard dispenser: "Help make everyone count"
D-260AS	Postcard dispenser: "Help make everyone count" (Spanish version)
D-261	Applicant postcard
D-261A	Recruitment flyer for Northeastern United States
D-261B	Recruitment flyer for New York city—cancelled
D-261S	Application postcard (Spanish version)
D-262	Employment test information for census job applicants
D-263	Census employment inquiry
D-263A	Cultural familiarity questionnaire
D-264	Reply to employment inquiry
D-265	Regional office reply to census employment inquiry
D-266	Notice to report for test

Series and form number	Title or description
D-267	Instructions for employee selection aid
D-267A	Field employee selection aid (test A)
D-267A(SP)	Field employee selection aid and answer sheet
D-267B	Field employee selection aid (test B)
D-267E	Field employee selection aid (alternative test)
D-267V	Instructions for employee selection aid, Selection Aid Validation Study [SAVS]
D-267V(SP)	Instructions for employee selection aid, SAVS site
D-268	Answer keys for field employee selection aids, and application review rating guide
D-268A	Same as D-268, SAVS site—cancelled
D-268E	Answer key for field employee selection aid test (alternative test)
D-269A	Interview guide for enumerators
D-269A1	Interview rating form for enumerators
D-269B	Interview guide for crew leaders
D-269B1	Interview rating form for crew leaders
D-269C	Interview guide for senior office clerks (office processing, field, special place, payroll operations)
D-269C1	Interview rating form for D-269C
D-269D	Interview guide for clerks (office processing operations)
D-269D1	Interview rating form for D-269D
D-269E	Interview guide for payroll and office services clerks
D-269E1	Interview rating form for D-269E
D-270	Instructions for employee selection aids for supervisors
D-270A	Field employee selection aid for supervisors (test A)
D-270B	Field employee selection aid for supervisors (test B)
D-270V	Instructions for selection aid for supervisors, SAVS
D-271	Answer key for selection aid for supervisors
D-271A	Interview and selection record
D-271V	Validation supplement for supervisory selection procedures
D-273	Notice to report for training
D-274	Roster of crew leaders/list of training sites
D-275	Record of training
D-276	Letter: "Thank you for donating training space"
D-277	Appointment folder
D-278	Appointment folder, centralized
D-279	Appointment folder, decentralized
D-281	Appointment folder, conventional
D-282	Administrative work transmittal
D-284	Minority employment and handicap report
D-285	Minority group and handicap designator record
D-286A	Qualified applicant card
D-286B	Unqualified applicant card
D-286C	Unselected applicant card
D-287	Centralized piece-rate pay system
D-288	Piece-rate pay system
D-289	Employee pay voucher, prelist
D-289A	Employee record of travel expenses, prelist
D-290	Employee pay voucher, centralized
D-290A	Employee record of travel expenses, centralized
D-291	Employee pay voucher, decentralized
D-291A	Employee record of travel expenses, decentralized
D-292	Employee pay voucher, conventional
D-292A	Employee record of travel expenses, conventional
D-293	Employee check digits notification
D-295	District office local review summary
D-295A	Continuation page for D-295
D-296	Employment reference check

Appendix 5B. List of Public- and Field-Use Forms for the 50 States and the District of Columbia

Series and form number	Title or description
D-297	Employment reference check control card
D-298	Census job applicant recommendations
D-299	Manual: Guide sheet—20 percent reduction
D-300	Census office employee identification card
D-300.1	Progress and cost report book, prelist wave 1
D-300.2	Progress and cost report book, prelist wave 2
D-300.3	Progress and cost report book, prelist wave 3
D-300.4	Progress and cost report book, prelist wave 4
D-301	Manual/progress and cost report book, centralized
D-302	Manual/progress and cost report book, decentralized
D-304	Manual/progress and cost report book, conventional
D-305	Prelist quality control progress record
D-308	District office record of housing units assigned for recanvass or local jurisdiction
D-309	Regional record of housing units assigned for recanvass
D-310	Tally sheet
D-311	Precanvass quality control record
D-312	District office field progress summary
D-313	District office record of progress of field operation
D-314	Postcensus local official review, outlying areas of Alaska
D-315	Testing daily summary
D-316	District office record of testing
D-317	Postal corrections progress—cancelled
D-318	Daily record of hours and production
D-321	Assignment summary
D-323	Census taker jobs
D-324	Lockbox mailout and receipt record
D-325	Cover for ED directory
D-326	Cover for tract/block directory
D-327	Cover for block header record
D-327A	Instructions for using D-327 block header record
D-329	Cover for special place alphabetic list
D-330	Cover for special place ED/block list
D-331	Precanvass quality control
D-332	Directory, ZIP Code by district office
D-333	Local official review report of political-boundary problem
D-334	Cover for county/MCD/CCD place directory (precensus)
D-334A	Cover for county/MCD/CCD place directory (postcensus)
D-340	Record of local review and followup
D-346	Split ED listing
D-347	Changed block number listing
D-350	Special place control card
D-351	Special place control card
D-352	Special place shuttle card
D-353	Special place shuttle card
D-354	Special place office review
D-355	Result of coverage improvement search by ED—cancelled
D-356	District office record, nonhousehold search
D-356A	District office record of nonhousehold search—cancelled
D-356B	District office record of lockbox search—cancelled
D-357	SCR, ICR, UHE, and lockbox search
D-358	District office record of T-Night returns
D-359	Results of ED and block coding
D-360	District office record of ICR and UHE search

Series and form number	Title or description
D-361	District office record of SCR search
D-362	Special place shuttle card, continuation
D-363	Field count capture problem referral—ED's
D-364	Field count capture problem referral—blocks
D-365	Work-unit identification label
D-366	Edit production and quality control record
D-368	Public-housing coverage card
D-369	Edit template, conventional
D-370	Special place edit template, centralized and decentralized
D-371	Special place edit template, conventional
D-372	Field reconciliation card, precanvass
D-373	Precanvass transfer record
D-374	ED and block followup card
D-375	Questionnaire assistance referral
D-376A	Report of late mail returns
D-376B	Report of Spanish form requests
D-378	Short-form edit template, centralized and decentralized
D-379	Long-form edit template, centralized and decentralized
D-380	Record of edit quality control
D-381	Telephone followup assignment record
D-382	Telephone call record
D-383	Telephone followup quality control record
D-383-CV	D-383 for Components of Variance Study
D-384	Record of questionnaire followup
D-385A	End-of-ED marker, short form
D-385B	End-of-ED marker, long form
D-386	Central bin file operation tag
D-387	ED posting worksheet, population and housing
D-388	ED/block posting worksheet
D-388A	ED/address register page worksheet
D-389	District office control of change-of-address orders
D-390	ED status summary
D-391	District office control of change-of-address orders
D-394	Record ED's split by district office, centralized and decentralized
D-394A	Record of ED's split by district office, conventional
D-395	District office geographic problem referral
D-396	Central bin files ED control record
D-397	Central bin files control card
D-398	Central bin files work-unit control record
D-399	Record of contact, questionnaire assistance
D-401	ED/block correction worksheet
D-402	Population and housing count control
D-403	Record of questionnaire quality control
D-405	Sample tolerance worksheet
D-408	Local review recanvass summary
D-409	Summary of work units edited
D-410	Central bin file operation tag, conventional
D-412	Local review cost and progress report
D-413	Population and housing transmittal
D-417	ED status summary, conventional
D-418	Central bin file control card, conventional
D-419	Local review daily receipt log

Appendix 5B. List of Public- and Field-Use Forms for the 50 States and the District of Columbia

Series and form number	Title or description
D-420	Local review response priority worksheet
D-421	Local review progress report
D-422	Local review recanvassing results
D-424	Local review response log
D-425	Employee selection record, SAVS
D-426	Applicant information, SAVS
D-427	Separation record, SAVS
D-428	Enumeration performance record, SAVS
D-430	Precanvass enumeration and edit clerk performance record, SAVS
D-431	Payroll validation worksheet
D-433	Individual edit record
D-434	Nonhousehold sources search and followup verification
D-449	In-file tracking record
D-450	Inspection report on space offered for district offices
D-451	Summary of map acquisition activities
D-452	Application for license to reproduce copyrighted maps—cancelled
D-453	Map acquisition contacts
D-454	File closeout evaluation, field SMSA-completion report
D-455	Map acquisition manual
D-456	Field coding manual for GBF/DIME closeout evaluation
D-457	District office lease information record
D-460	Guide for preparing SF-1012 travel vouchers
D-461	Population and housing work unit control, regional census center
D-463	Print header strip, payroll master file—cancelled
D-466-CT	Regional technician's checklist, centralized—cancelled
D-467	Regional technician's checklist, decentralized—cancelled
D-468	Regional technician's checklist, conventional
D-471A	Precensus letter to accompany listings/maps for all-mail jurisdiction not split by district office, plus 2 enclosures—cancelled
D-471B	Precensus letter as above, except split by district office—cancelled
D-471C	Precensus letter to accompany listings/maps for jurisdictions partially mail and partially conventional, plus 2 enclosures—cancelled
D-471D	Precensus letter to accompany listings/maps for all-mail Indian reservations not split by district office, plus 2 enclosures—cancelled
D-471E	Precensus letter as above, except split by district office—cancelled
D-472	Letter to all officials after precensus review, plus 1 enclosure (census representatives)—cancelled
D-473(L)	Letter enclosure: census representatives, local review program—cancelled
D-473A(L)	Postcensus letter to accompany letters/maps for jurisdictions not split by district office, local review program
D-473B(L)	Same as D-473A, but split by district office
D-473C(L)	Same as D-473B, but for second and subsequent shipments
D-473D(L)	Same as D-473A, but to tribal officials
D-473E(L)	Same as D-473B, but to tribal officials
D-473F(L)	Same as D-473E, but for second and subsequent shipments
D-474B	Population and housing ED control list
D-474E	Work-in-transit report
D-475	Supply requirements for census
D-476	Forms, supplies, equipment, and materials required for census
D-477	Printing and receiving report for forms and contract items
D-478	Centralized district office worksheet
D-479	Decentralized district office worksheet
D-480	Conventional district office worksheet

Series and form number	Title or description
D-481	Field—1980 planning schedule
D-482	District office lease tracking
D-483	Training guide sheet
D-484	Letter/form: Complete-count committee participation request
D-485	Complete-count committee guidelines
D-486	Complete-count committee record of contacts
D-487	Complete-count committee activity report
D-500	Manual: Prelist office administrative
D-501	Manual: District office administrative, centralized
D-502	Manual: District office administrative, decentralized
D-503	Manual: District office administrative, conventional
D-504	Manual: Office operations supervisor's, centralized
D-505	Manual: Office operations supervisor's, decentralized
D-506	Manual: District manager's, centralized
D-507	Manual: District manager's, decentralized
D-508	Manual: District manager's, conventional
D-509	Manual: Office operations assistant, conventional
D-512D	Supplemental instructions for crew leaders, SAVS
D-512E	Supplemental instructions for enumerators, SAVS (centralized/decentralized)
D-513A	Manual: Precanvass corrections, centralized/decentralized
D-513B	Manual: Office ED and block coding, centralized/decentralized
D-513C	Manual: Postal corrections, centralized/decentralized
D-513D	Manual: Mail and enumeration return processing, centralized/decentralized
D-513DK	Manual: Supplement to D-513D
D-513E	Manual: Questionnaire control, centralized
D-513F	Manual: Special place materials processing, centralized/decentralized
D-513G	Manual: Edit, centralized/decentralized
D-513H	Manual: Edit quality control, centralized/decentralized
D-513I	Manual: Edit control, centralized/decentralized
D-513J	Manual: Telephone followup, centralized
D-513K	Manual: Telephone followup quality control, centralized
D-513L	Manual: Merge, centralized/decentralized
D-513M	Manual: Coverage improvement searches, centralized/decentralized
D-513N	Manual: Followup 2 assignment preparation, centralized/decentralized
D-513O	Manual: Coverage improvement corrections, centralized/decentralized
D-513P	Manual: Office separations, centralized/decentralized
D-513Q	Manual: Population and housing counts, centralized/decentralized
D-513R	Manual: Packing operations
D-513S	Manual: Pre-census local review, centralized/decentralized
D-514B	Manual: Questionnaire control, decentralized
D-517	Manual: Recruiters
D-520	Manual: Regional administrative
D-526	Manual: Followup 1 quality control enumerators, decentralized
D-527	Manual: Followup 1 quality control crew leaders, decentralized
D-528	Manual: Field separations
D-529	Manual: Field operations supervisor's, conventional
D-529A	Manual: Assignment control, conventional
D-529B	Manual: Followup assignment control, conventional
D-530	Manual: Field operations supervisor's, centralized
D-530A	Manual: Followup 1 assignment control, centralized
D-530B	Manual: Followup 2 assignment control, centralized
D-531	Manual: Field operations supervisor's, decentralized
D-531A	Manual: Followup 2 assignment control, decentralized

Appendix 5B. List of Public- and Field-Use Forms for the 50 States and the District of Columbia

Series and form number	Title or description
D-532A	Manual: Questionnaire quality control, conventional
D-532B	Manual: Indian edit supplement, conventional
D-532C	Manual: Questionnaire control, conventional
D-532D	Manual: Coverage check, conventional
D-532E	Manual: Vacancy/delete check, conventional
D-532F	Manual: Sample tolerance check, conventional
D-532G	Manual: Merge, conventional
D-532H	Manual: Postal corrections, conventional
D-532I	Manual: Office separations, conventional
D-532J	Manual: Population and housing counts, conventional
D-534	Manual: Office operations, prelist
D-534A	Manual: Postal corrections, prelist
D-535	Manual: Enumerator's instructions, prelist
D-536	Manual: Quality control enumerator's, prelist
D-537	Manual: Crew leader's, prelist
D-538	Instructions for repair of prelist ED, prelist
D-539	Precanvass enumerator's instructions
D-540	Manual: Precanvass enumerator's, centralized/decentralized
D-541	Manual: Precanvass crew leader's, centralized/decentralized
D-542	Repair and recanvass of a precanvass ED
D-543	Manual: Field ED and block coder's
D-544	Manual: District office supplement, outlying areas of Alaska
D-546	Instructions for finding missed and miscoded living quarters
D-547	Manual: Followup 1 enumerator's, centralized
D-548	Manual: Followup 1 enumerator's, decentralized
D-548AT	Manual: Followup 1 enumerator's job aid
D-548K	Manual: Enumerator's supplement, Oklahoma
D-548N	Manual: Indian supplement for followup 1 enumerators, decentralized
D-548.50	Prelist recanvass enumerator's instructions
D-549	Manual: Enumerator's, conventional
D-549N	Manual: Indian supplement for enumerators, conventional
D-551	Manual: Followup enumerator's, conventional
D-552	Manual: Followup crew leader's, conventional
D-553	Manual: Followup 1 crew leader's, centralized
D-554	Manual: Followup 1 crew leader's, decentralized
D-554K	Manual: Crew leader's supplement, historic areas of Oklahoma
D-554N	Manual: Indian supplement for crew leaders, decentralized
D-555	Manual: Crew leader's, conventional
D-555N	Manual: Indian supplement for crew leaders, conventional
D-557	Manual: Followup 2 enumerator's, centralized
D-558	Manual: Followup 2 enumerator's, decentralized
D-559	Manual: Followup 2 crew leader's, centralized
D-560	Manual: Followup 2 crew leader's, decentralized
D-561	Questionnaire reference book
D-561A	Indian questionnaire reference book
D-561H	Questionnaire reference book, Hawaii
D-562	Manual: Prelist field ED and block coder
D-563	Manual: Field review of counts, conventional
D-564	Manual: Field review of counts, centralized/decentralized
D-565	Manual: Special place operations, centralized/decentralized
D-566	Manual: Field operations assistant's, outlying areas of Alaska
D-567	Manual: Special place operations, conventional
D-568	Special place prelist instructions
D-569	Manual: Special place enumerator's, centralized/decentralized

Series and form number	Title or description
D-570	Manual: Special place regional technician's
D-571	Manual: Special place enumerator's, conventional
D-572	Manual: Special place crew leader's, centralized/decentralized
D-573	Manual: Crew leader's, outlying areas of Alaska
D-574	Manual: Special place crew leader's, conventional
D-575	Manual: On-site representative's, self-enumerating military installations
D-576	Manual: Self-enumerating military installations
D-576A	Manual: Self-enumerating military installations, Alaska
D-577	Manual: On-site representative, hospitals and prisons
D-578	Manual: Self-enumerating hospitals and prisons
D-579	Manual: Enumerator's, outlying areas of Alaska
D-580	Manual: Self-enumeration—military crews of ships
D-581	Manual: District office personnel and payroll, centralized
D-582	Manual: District office personnel and payroll, decentralized
D-583	Manual: District office personnel and payroll, conventional
D-584	Manual: Prelist office personnel and payroll
D-590	Manual: Enumerator payroll and administrative, centralized
D-591	Manual: Enumerator payroll and administrative, decentralized
D-592	Manual: Enumerator payroll and administrative, conventional
D-593	Manual: Enumerator payroll and administrative, prelist
D-594	District office space allocation standards
D-595	Manual: Crew leader payroll and administrative, centralized
D-596	Manual: Crew leader payroll and administrative, decentralized
D-597	Manual: Crew leader payroll and administrative, conventional
D-598	Manual: Crew leader payroll and administrative, prelist
D-599	Master listing, "D" series forms, manuals, guides for training, training aids
D-601	Guide for training administrative operations supervisor
D-602	Manual: Guide for training administrative operations supervisor
D-604	Manual: Guide for training office operations supervisors, stage 1
D-604-2	Guide for training office operations supervisors, stage 2
D-604-3	Self-study for office operations supervisor, centralized
D-604-4	Guide for training senior office clerks for supervisory duties
D-604-8	Manual: Guide for training senior office clerks for office ED and block coding
D-604-10	Guide for training senior office clerks for postal corrections
D-604-15	Guide for training senior office clerks for open/check-in/H4 edit
D-604-16	Guide for training senior office clerks on edit
D-604-19	Manual: Guide for training senior office clerks for telephone followup/quality control
D-604-21	Guide for training senior office clerks for merge
D-604-22	Guide for training senior office clerks for coverage improvement searches, centralized
D-604-25	Guide for training senior office clerks for coverage improvement corrections
D-604-27	Guide for training senior office clerks for population and housing counts
D-605-1	Workbook 1: Office operations supervisors, stage 1
D-605-2	Guide for training office operations supervisors, stage 2
D-605-3	Self-study for office operations supervisor, decentralized
D-605-4	Guide for training senior office clerks for supervisory duties
D-605-8	Guide for training senior office clerks for office ED and block coding
D-605-10	Guide for training senior office clerks for postal corrections
D-605-13	Guide for training senior office clerks for telephone assistance
D-605-15	Guide for training senior office clerks for open/check-in/H4 edit
D-605-16	Guide for training senior office clerks on quality-control edit
D-605-20	Guide for training senior office clerks for merge
D-605-21	Guide for training senior office clerks for coverage improvement searches, decentralized
D-605-25	Guide for training senior office clerks for population and housing counts

Appendix 5B. List of Public- and Field-Use Forms for the 50 States and the District of Columbia

Series and form number	Title or description
D-609	Guide for training office operations assistant
D-609-4	Guide for training senior office clerks for supervisory duties
D-609-9	Guide for training senior office clerks on questionnaire quality control, conventional
D-609-11	Guide for training senior office clerks for coverage check, conventional
D-609-12	Guide for training senior office clerks for sample tolerance check
D-609-13	Guide for training senior office clerks for merge
D-609-16	Guide for training senior office clerks for population and housing counts
D-613-2	Guide for training field operations assistant, stage 1, decentralized
D-613A-1	Guide for training clerks for precanvass corrections
D-613A-2	Guide for training clerks for precanvass corrections, centralized and decentralized
D-613B	Manual: Guide for training clerks for office ED and block coding
D-613C-1	Guide for training clerks for postal corrections, centralized and decentralized, part 1 of 2
D-613C-2	Guide for training clerks for postal corrections, centralized and decentralized, part 2 of 2
D-613D-1	Guide for training clerks for sort and serialization, part 1 of 2
D-613D-2	Guide for training clerks for open/check-in/H4 edit, part 2 of 2
D-613E	Guide for training clerks for questionnaire control
D-613E-1	Self-study, questionnaire control clerk
D-613F-1	Guide for training clerks on special place prelist adds
D-613F-2	Manual: Guide for training clerks on T-night adds
D-613G-1	Guide for training clerks on short-form edit
D-613G-2	Manual: Guide for training clerks on long-form edit
D-613H	Guide for training clerks on short-form verification
D-613H-1	Guide for training clerks on short-form pre-edit
D-613H-3	Guide for training clerks on short-form verification (independent)
D-613H-4	Manual: Guide for training clerks on long-form verification
D-613H-65	Answer key for D-613H-4
D-613I-1	Guide for training clerks for short-form edit control, centralized and decentralized
D-613I-2	Guide for training clerks for long-form edit control, centralized and decentralized
D-613I-4	Self-study, long-form edit control clerk, part 1
D-613I-4	Self-study, long-form edit control clerk, part 2
D-613J	Guide for training telephone followup clerks
D-613K	Guide for training clerks for telephone followup
D-613L	Guide for training clerks for merge
D-613M	Guide for training clerks for coverage-improvement searches, centralized and decentralized
D-613N	Guide for training clerks for followup 2 assignment preparation
D-613O	Guide for training clerks for coverage-improvement correction, centralized and decentralized
D-613Q	Guide for training clerks for population and housing counts
D-614E	Guide for training clerks for questionnaire control
D-622	Guide for training data-entry transcriber
D-622-1	Workbook for data transcriber, guided training
D-622-2	Workbook for data transcriber, personnel list keying
D-622-3	Workbook for data transcriber, number keying
D-622-4	Guide for training data transcriber, part 1, BC-50A keying exercise
D-622-4	Guide for training data transcriber, part 2, payroll keying exercise
D-626	Guide for training enumerators for followup 1 quality control, decentralized
D-627	Guide for training crew leaders for followup 1 quality control, decentralized
D-629-1	Guide for training field operations supervisors
D-629-2	Manual: Guide for training filed operations supervisors (part 2 of guide)
D-629A	Guide for training clerks for assignment control, conventional
D-630-1	Guide for training field operations supervisors, stage 1
D-630-2	Guide for training field operations assistants, stage 1
D-630-3	Guide for training field operations supervisors, stage 2
D-630-4	Guide for training field operations assistants, followup 1 and 2, centralized
D-630A	Manual: Guide for training for followup 1 assignment control

Series and form number	Title or description
D-630B	Guide for training clerks for followup 2 assignment control
D-631-1	Guide for training field operations supervisors, stage 1
D-631-2	Guide for training field operations assistants, stage 1
D-631-3	Guide for training field operations supervisors, stage 2
D-631-4	Guide for training field operations assistants, followup 1 and 2, decentralized
D-631-5	Guide for training new field operations assistants, blue-card coding and supervision, decentralized
D-631A	Guide for training clerks for followup 2 assignment control, decentralized
D-632A	Guide for training clerks for questionnaire followup control
D-632C	Guide for training clerks for questionnaire control
D-632D	Guide for training clerks for coverage check, conventional
D-632E	Guide for training clerks for vacancy/delete check
D-632F	Guide for training clerks for sample tolerance check
D-632G	Guide for training clerks for merge
D-632H	Self-study for postal corrections clerk
D-632J	Guide for training clerks for population and housing counts
D-634-1	Workbook for office manager, field operations assistant, office operations assistant
D-634-2	Job aid for office manager, field operations assistant, office operations assistant, prelist
D-635-1	Workbook for prelist enumerators
D-635-2	Map reading and canvassing review exercises
D-635-3	ED map for training
D-635-4	Address register for training
D-635-5	Job aid for prelist enumerators
D-635-6	Review test for prelist enumerators
D-636	Guide for training prelist control enumerators
D-636-1	Workbook for prelist quality control enumerators
D-636-2	Job aid for prelist quality control enumerators
D-636-3	Crew leader district map (partial)
D-636-4	Map backing and sketch sheet
D-636-8	Quality-control address register for matching
D-636-9	Map for advance-listing crew leader district
D-636-10	Self-study for quality-control enumerators, matching and reconciliation
D-636-11	Manual: Self-study for quality-control enumerators, induction and first review
D-637	Guide for training prelist crew leaders
D-637-1	Workbook for prelist crew leaders
D-637-2	Workbook for travel and per diem
D-639(CT)	Guide for training precanvass enumerators, centralized
D-639(D)	Guide for training precanvass enumerators, decentralized
D-639-1	Workbook for precanvass enumerator, centralized and decentralized
D-639-4	Precanvass field trip checklist—cancelled
D-640(CT)	Guide for training precanvass quality-control enumerators, centralized
D-640(D)	Guide for training precanvass quality-control enumerators, decentralized
D-640-3	Self-study for precanvass quality-control enumerators, induction and first review
D-640-4	Self-study for precanvass quality-control enumerators, suppressed-unit check
D-641	Guide for training precanvass crew leaders
D-641(D)	Guide for training precanvass crew leaders, decentralized
D-641(D)-1	Workbook for precanvass crew leader
D-643	Guide for training enumerators for field ED and block coding, centralized and decentralized
D-645	Guide for training questionnaire assistance personnel (walk-in), centralized (part 1 of 2)
D-645	Guide for training questionnaire assistance personnel (telephone) (part 2 of 2)
D-645-1	Workbook for questionnaire assistance personnel (walk-in)
D-648K	Guide for training enumerators for followup 1, Oklahoma supplement, decentralized (part 1 of 2)
D-648K	Guide for training enumerators for followup 2, Oklahoma supplement (part 2 of 2)
D-648N	Guide for training enumerators for followup 1, Indian supplement, decentralized
D-648.50	Guide for training prelist recanvass enumerators

Appendix 5B. List of Public- and Field-Use Forms for the 50 States and the District of Columbia

Series and form number	Title or description
D-648.51	Workbook for prelist recanvass enumerators, including instructions
D-649	Guide for training regular enumerators, conventional
D-651	Guide for training followup enumerators, conventional
D-652	Guide for training crew leaders for followup, conventional
D-653	Guide for training crew leaders for followup 1
D-654	Guide for training crew leaders for followup 1
D-654K	Guide for training crew leaders, Oklahoma supplement
D-654N	Guide for training crew leaders for followup 1, Indian supplement
D-655-1	Guide for training crew leaders, advance assignments
D-655-2	Guide for training crew leaders, crew leader's duties
D-655-4	Partial map of crew leader's district for training
D-655-N	Guide for training crew leaders for followup, Indian supplement
D-657-1	Guide for training enumerators for followup 2, unit status review, centralized
D-657-2	Guide for training enumerators for followup 2, failed edit, centralized
D-658	Guide for training enumerators for followup 2
D-658-1	Guide for training enumerators for followup 2, unit status review, decentralized
D-658-1A	Chapter K, recanvass, decentralized
D-659	Guide for training crew leaders for followup 2, centralized
D-660	Guide for training crew leaders for followup 2, decentralized
D-665	Guide for training special place operations supervisor, centralized and decentralized (part 1 of 3)
D-665	Guide for training special place senior office clerk, precensus, centralized and decentralized (part 2 of 3)
D-665	Guide for training special place senior office clerk, postcensus, centralized and decentralized (part 3 of 3)
D-665-2	Self-study for preparation of T-Night kits
D-665-3	Self-study for UHE (usual home elsewhere) and transcription
D-665-5	Workbook for special place senior office clerk, precensus
D-665-11	Workbook for special place senior office clerk, postcensus, centralized and decentralized
D-667	Guide for training special place senior office clerks (part 1 of 3)
D-667	Guide for training special place clerks, precensus (part 2 of 3)
D-667	Guide for training special place clerks, postcensus (part 3 of 3)
D-667-2	Self-study for preparation of T-Night kits
D-667-3	Self-study for UHE (usual home elsewhere) edit and transcription
D-667-4	Self-study for ICR (individual census report) and UHE (usual home elsewhere) searches
D-668(CT)	Guide for training special place prelist enumerators, centralized
D-668(D)	Guide for training special place prelist enumerators, decentralized
D-669(CT)	Guide for training special place enumerators, centralized
D-669(D)	Guide for training special place enumerators, decentralized
D-669-10	Self-study for casual-count enumerators
D-669-20	Self-study for enumeration in park ED's
D-671	Guide for training special place enumerators
D-671-1	Workbook for special place enumerator
D-672(CT)	Guide for training special place crew leaders, centralized
D-672(D)	Guide for training special place crew leaders, decentralized
D-673	Guide for training crew leaders, Alaska early enumeration
D-674	Guide for special training, special place crew leaders
D-674-2	Workbook for special place crew leader
D-675-1	Self-study for on-site representative, military
D-677-1	Self-study for on-site representative, hospitals and prisons
D-683	Guide for training payroll/personnel clerks
D-684-1	Workbook for payroll/personnel clerks, prelist
D-700A	Address card, tape address register areas
D-700B	Address card, prelist areas
D-700B-1	Address card, special places

Series and form number	Title or description
D-700C	Address card, advance post office check quality control
D-702	Post office report of residence missed by census
D-707(C)	Address card, post-enumeration post office check (PEPOC), conventional
D-708	Instructions for postmaster/supervisor, PEPOC
D-708	Supplement to instructions for postmaster/supervisor, PEPOC
D-709	Instructions for postal employees, PEPOC
D-711	Instructions for postmaster/supervisor, casing and delivery
D-712A	Supplemental instructions for advance post office check (APOC), phase II quality service review
D-713	Instructions for postal carriers and employees, casing check
D-714	Instructions for postal carriers and employees, delivery of census mailing pieces
D-718	U.S. Postal Service worksheet for allocation of supplies
D-719	Instructions for postmaster/supervisor, update list-leave experimental program
D-720	Instructions for postal employees, casing and delivery, update list-leave experimental program
D-721	U.S. Postal Service mail sack tag
D-750	Flyer: ''What's the big deal about the 1980 census?''
D-751S	Flyer: ''Who needs the census? You do!''
D-752	Flyer: ''Answer the census; it's strictly confidential. We're counting on you.''
D-755	Office sign, community services program
D-760	Poster: ''April 1 is Census Day! Make sure you are counted!'' (followed by name of language): English, Cambodian, Chamorro, Chinese, Ilocano, Indian, Japanese, Korean, Laotian, Navajo, Samoan, Spanish, Tagalog, Thai, Vietnamese
D-763	Poster: ''April 1 is Census Day!'' (followed by name of language): English, Asian Indian, Cambodian, Chamorro, Chinese, Ilocano, Laotian, Navajo, Samoan, Tagalog, Vietnamese
D-764	Flyer: ''Answer the census; we're counting on you''; (followed by name of language): English, Asian Indian, Cambodian, Chamorro, Chinese, Ilocano, Japanese, Korean, Laotian, Samoan, Spanish, Tagalog, Thai, Vietnamese
D-765	Poster: ''It's not too late''; (followed by name of language): English, American Indian (urban), Cambodian, Chamorro, Chinese, Ilocano, Japanese, Korean, Laotian, Samoan, Spanish, Tagalog, Thai, Vietnamese
D-766	Handbill: ''It's not too late. Answer the census ...'' (followed by name of language): English, American Indian (urban, rural), Cambodian, Chamorro, Chinese, Ilocano, Japanese, Korean, Laotian, Samoan, Tagalog, Thai, Vietnamese
D-771	Flyer: Our 1980 census....
D-771S	Flyer: Our 1980 census....(Spanish version)

Appendix 5C. Facsimiles of Selected Field-Use Forms

(Forms include fictitious entries for purposes of illustration)

Form	
BC-50A.	Application for Excepted Employment
BC-112.	Notice, Restrictions of Political Activity
D-26.	Census Appointment Record
D-27	Introduction for Spanish-Speaking Respondents
BC-110.	Enumerator's Identification Card
D-31.	Privacy Act Notice
D-101B.	Special Place Address Listing Place
D-102.	Master Address Register (cover)
D-102A.	Address Listing Page
D-116B.	Special Place Sample Selection Listing Page (3/6 Sample)
D-117.	Casual Interview Production Record
D-263.	Census Employment Inquiry
D-263A.	Cultural Familiarity Questionnaire
B-291.	Employee Pay Voucher (hourly rates)
D-291A.	Employee's Record of Travel Expenses
D-292.	Employee Pay Voucher
CD-317.	Privacy Act Advisory Statement
D-351.	Special Place Control Card
D-353.	Special Place Shuttle Card (conventional)
D-434.	Nonhousehold Sources Record

Form BC-50A. Application for Excepted Employment

(WRITE HARD – USE BALL POINT PEN)

Form Approved: O.M.B. No. 41-S78064

FORM BC-50A (4-5-78) EXCEPTION TO SF-50A APPROVED BY NARS (7-78)

U.S. DEPARTMENT OF COMMERCE BUREAU OF THE CENSUS

APPLICATION FOR EXCEPTED EMPLOYMENT IN THE FIELD SERVICE
NOTICE OF SHORT-TERM EMPLOYMENT AND APPOINTMENT AFFIDAVITS
(This form will be used only for employees for major and special censuses. Appointments may not exceed 180 days.)

Appointed for: 20th DECENNIAL CENSUS Centralized

Part A – QUALIFICATIONS STATEMENT (For use of the APPLICANT – Read "INSTRUCTIONS TO APPLICANTS" on back of copy 1 of this form before you fill items 1 through 20. **WARNING** – Making false statements on this form is punishable by law.

1. Name *(Last, first, middle or initial) PLEASE PRINT* ☒ Mr. ☐ Miss ☐ Mrs. ☐ Ms.
Mann, Mike M.

2. Date of birth *(Mo., day, year)* 10-14-43

3. Social Security number 000-00-000

4. Home address *(Number, street, city, county, State, ZIP code)* 456 Mill Road Anytown, County, USA 00100

5. Telephone number 763-7481

6. In an emergency, notify *(Name, number, street, city, State, ZIP code)* 456 Mill Road Anytown, USA 00100

7. Telephone number 763-7481

8. List dates and branch of all active military service
From 7-21-63 To 7-21-66 Branch Army
Kind of discharge ☒ Honorable ☐ Other – *Explain in item 20.*

9. If you have had Federal civilian service, give total time worked
____ Years ____ Months ____ Days, and give in item 20 the name and address of the last agency you worked for and date of separation.

ANSWER BY PLACING AN "X" IN THE PROPER COLUMN	Yes	No
10. Are you a citizen of the United States? If No, give country of which you are a citizen.	X	
11. Are you now employed by a Federal agency, or are you receiving a lump sum payment from a Federal agency for leave extending into the date of this statement? *If Yes, explain in item 20.*		X
12. Do you receive or do you have a pending application for retirement or retainer pay, pension or other compensation based upon military, Federal civilian, or District of Columbia Government service? *If Yes, explain in item 20.*		X
13. Are you an official or an employee of any State, territory, county, or municipality? *If Yes, explain in item 20.*		X
14. Are you now barred by the U.S. Civil Service Commission from taking examinations or accepting a civil service appointment? *If Yes, explain in item 20.*		X
15. Within the last 5 years, have you ever been fired from any job, or have you quit after being informed that your employer intended to fire you for any reason? *If Yes, give in item 20 the name, address, and telephone number of employer, date, and reason in each case.*		X
16a. Have you **ever** been convicted, forfeited collateral, or are you now under charges for **any felony** or **any** firearms or explosives offense against the law? *(A felony is defined as any offense punishable by imprisonment for a term exceeding 1 year, but does not include any offense classified as a misdemeanor under the laws of a State and punishable by a term of imprisonment of 2 years or less.)*		X
b. During the past 7 years have you been convicted, imprisoned, on probation or parole or forfeited collateral, or are you now under charges for any offense against the law not included in a above?		X
NOTE – When answering a and b above, you may omit: (1) traffic fines for which you paid a fine of $50.00 or less, (2) any offense committed before your 18th birthday which was finally adjudicated in a juvenile court or under a youth offender law, (3) any conviction the record of which has been expunged under Federal or State law, and (4) any conviction set aside under the Federal Youth Corrections Act or similar State authority.		
17. While in the military service were you ever convicted by a general court-martial? *If your answer to 16a, 16b, or 17 is "YES," give details in item 20. Show for each offense: (1) date; (2) charge; (3) place; (4) court; and (5) action taken.*		X
18. Does the Bureau of the Census employ any relative of yours (by blood or marriage) in this locality? *If Yes, give in item 20 for each relative: (1) full name; (2) address, including ZIP code; and (3) relationship.*		X

19. Education *(Circle highest grade completed)*
Elementary: 1 2 3 4 5 6 7 8 — High School: 9 10 11 12 — College: (13) 14 15 16

20. Detailed answers – List by item number – *If more space is needed, continue on plain paper – give name and date of birth at top and attach.*

21. I certify that the statements made in this application are true, complete, and correct to the best of my knowledge and belief, and that the number of the withholding exemptions and allowances claimed does not exceed my entitlement under law.
Applicant's signature Mike M. Mann Date 4-24-80

Part B – NOTICE OF PERSONNEL ACTION (For use of agency)

22. Excepted Appointment ☒ Intermittent ☐ Full-time
This appointment is subject to the conditions outlined below. It may be terminated at any time within 180 days and will terminate without further written notice at the close of the last day you are assigned to duty.

23. APPOINTMENT AUTHORITY: Schedule A213.3114(d)(1)

24. AGENCY CODE: C.M. 37 Department of Commerce

25. Field headquarters Charlotte, N.C. 2899

26. Duty station *(City, County/State)* OR HOME ☒

27. Effective date of appointment 4-24-80

28. Veterans preference ☐ No ☒ Yes

29. Compensation from 1980 DECENNIAL CENSUS

30. Remarks and salary rate
☐ a. Enumerator* – $4.45 per hour
☐ b. Enumerator Q.C. – $4.75 per hour
☐ c. Crew Leader – $5.10 per hour
☒ f. Enumerator (piece rate)*:
$4.50 Nonresponse – Long Form (occ); $2.90 Nonresponse – Short Form (occ); $2.20 Vacant (Long or Short Form) } FLWP 1
$4.50 Missing Long (occ); $3.25 Missing Short (occ) } FLWP 2
$2.50 Missing Vacant (Long or Short Form); $2.50 Nonhousehold Source; $3.25 Failed Edit (Long); $2.85 Failed Edit (Short); $2.25 Vacant/delete } FLWP 2
$ .15 per mile (time enroute when authorized)
☐ d. Clerk – $3.75 per hour
☐ e. S.O.C. – $4.45 per hour
* Training fees paid at $26 for each full day of enumerator training (or $3.25 per hour for training time less than a full day.)
g. TAX WITHHOLDING INSTRUCTIONS
(1) Married or Single rate (circle one) (M) S
(2) Number of exemptions
Federal 2 State 2 City/Co. 2

OFFICE USE ONLY
(3) State Non Res. ____
(4) City/County Tax Code 1. ____ Non Res. ____
(5) City/County Tax Code 2: ____ Non Res. ____
h. Earned Income Credit (EIC) Code: ____
i. WORK GEOGRAPHIC LOCATION CODE
3 2 5 3 1 8 5 4 5

31. Signature of appointing officer Linda L. Lee — Date 4-24-80

Part C – OATH AND APPOINTMENT AFFIDAVITS

32. I swear (or affirm) to the Oath and Appointment Affidavits on the back of copy 3 of this form. Mike M. Mann
Appointee's signature

33. **To be Completed by Person Administering Oath**
Subscribed and sworn (or affirmed) before me this 24 day of April
A.D. 19 80 at Anytown, USA
City State
Signature of officer Linda L. Lee
Title Crew Leader
I have been designated to administer oaths under 5U.S.C. 2903

See reverse of copy 3 for other general information concerning your employment.

1 - PERSONNEL FOLDER COPY

Form BC-112. Notice, Restrictions on Political Activity

BC-112
(7-28-79)

U.S. DEPARTMENT OF COMMERCE
BUREAU OF THE CENSUS

NOTICE

RESTRICTIONS ON THE POLITICAL ACTIVITY OF EMPLOYEES

The Hatch Political Activity Act and the rules which govern the political activity of employees of the executive branch of the Federal Government prohibit the use of official authority or influence for the purpose of interfering with an election or affecting its results, and taking an active part in political management or in political campaigns. All employees have the right to vote as they please and the right to express their opinion, as individuals, on all political subjects and candidates.

Summarized are some of the principal "do's" and "don'ts" in the area of political activities. More complete and detailed information is provided in the Department of Commerce Administrative Order 202-733.

All full-time, part-time, and temporary employees are subject to these political activity restrictions at all times including leaves of absence, with or without pay. Persons employed on an intermittent (WAE) basis or without compensation are subject to the political activity restrictions of the law for the entire 24 hours of any day of actual employment.

Among the forms of political activity which are permitted and prohibited are:

PERMISSIBLE ACTIVITIES

You may:

1. Register and vote in any election;
2. Express your opinion as an individual citizen, privately and publicly, on political subjects and candidates;
3. Display a political picture, sticker, badge or button except when carrying out official business involving contact with the public (for example, a census interviewer, receptionist, etc.);
4. Participate in the nonpartisan activities of a civic, community, social, labor, professional, or similar organization;
5. Be a member of a political party or other political organization and participate in its activities to the extent consistent with law;
6. Attend a political convention, rally, fund-raising function, or other political gathering;
7. Sign a political petition as an individual citizen;
8. Make a financial contribution to a political party organization;
9. Take an active part, as an independent candidate or in support of an independent candidate, in a partisan election covered by subchapter 4 of Federal Personnel Manual Chapter 733;
10. Take an active part, as a candidate or in support of a candidate, in a nonpartisan election;
11. Be politically active in connection with a question which is not specifically identified with a political party, such as a constitutional amendment, referendum, approval of a municipal ordinance, or any other question or issue of a similar character;
12. Serve as an election judge or clerk, or in a similar position to perform nonpartisan duties as prescribed by State or local law; and
13. Otherwise participate fully in public affairs, except as prohibited by law, in a manner which does not materially compromise your efficiency or integrity as an employee or the neutrality, efficiency, or integrity of your agency.

None of these permissible activities authorize an employee to engage in political activity in violation of law, while on duty, or while in a uniform that identifies him/her as an employee. The head of an agency may prohibit or limit the participation of an employee or class of employees of the agency in the activities permitted if participation in the activity would interfere with the efficient performance of official duties, or create a conflict or apparent conflict of interests.

PROHIBITED ACTIVITIES

You may not:

1. Serve as an officer of a political party, a member of a national, State, or local committee of a political party, an officer or member of a committee of a partisan political club, or be a candidate for any of these positions;
2. Organize or reorganize a political party organization or political club;
3. Directly or indirectly solicit, receive, collect, handle, disburse, or account for assessments, contributions, or other funds for a partisan political purpose or in connection with a partisan election;
4. Organize, sell tickets to, seek support for, or actively participate in a fund-raising activity of, a political party or political club;
5. Take an active part in managing the political campaign of a candidate for public office or political party office;
6. Be a candidate for, or campaign for, an elective public office;
7. Take an active part in an organized solicitation of votes in support of or in opposition to a candidate for public office or political party office;
8. Act as recorder, watcher, challenger, or similar officer at the polls on behalf of a political party or a candidate in a partisan election;
9. Drive voters to the polls on behalf of a political party or a candidate in a partisan election;
10. Endorse or oppose a candidate in a partisan election in a political advertisement, a broadcast, campaign literature, or similar material;
11. Serve as a delegate, alternate, or proxy to a political party convention;
12. Address a State or national convention or caucus, or a rally or similar gathering of a political party in support of or in opposition to a candidate for public or political party office, or on a partisan political question; and
13. Initiate or circulate a nominating petition for a candidate in a partisan election.

EXCEPTION OF CERTAIN ELECTIONS

The Office of Personnel Management is authorized to issue regulations permitting Federal employees, who live in a municipality or other political subdivision in the immediate vicinity of the District of Columbia, in the States of Maryland and Virginia, or in municipalities where the majority of voters are employed by the Federal Government, to take part in political management and political campaigns in connection with partisan elections for local offices.

Requests for information concerning the designated localities discussed above and other inquiries should be directed to the Employee Relations and Services Branch, Personnel Division, or to the servicing personnel office.

Form D-26. Census Appointment Record

UNITED STATES DEPARTMENT OF COMMERCE
Bureau of the Census
Washington, D.C. 20233

Dear Friend:

The United States Census Bureau is now taking the 1980 Census. Our records indicate that we do not have a census questionnaire for your household. Although I have made several visits to obtain the required information, I have been unable to find anyone at home. Please call me at the number shown below so I can make an appointment to visit you at your convenience.

This census is authorized by title 13, United States Code, and you are required by law to answer the questions to the best of your knowledge. The same law protects the confidentiality of your answers. For the next 72 years only sworn census workers have access to the individual records and no one else may see them.

Thank you.

Mike M. Mann
Census Taker

763-7481
Telephone number

Census Appointment Record

FOR CENSUS TAKER'S USE ONLY				
D.O.	ED No.	Block No.	Serial No.	Type of form
2799	0131	101	0117	☐ Short ☒ Long

FORM D-26

Form D-27. Introduction for Spanish-Speaking Respondents

PARA PRESENTACIÓN EN HOGARES DE HABLA HISPANA

Soy un empleado de la Oficina del Censo de los Estados Unidos y vine a hablarle del Censo de 1980 que se está llevando a cabo actualmente. Cada diez años se toma un censo para contar el número de personas en los Estados Unidos. Como yo no hablo español, un enumerador del censo que habla ese idioma lo visitará próximamente.

Muchas gracias.

FORM D-27 — U.S. DEPARTMENT OF COMMERCE, BUREAU OF THE CENSUS

1980 CENSUS
OF THE UNITED STATES

Introduction for Spanish-speaking Respondents

1. ED No.	2. Serial No.	3. Form type
0131	0011	☒ Short ☐ Long

4. Name and address of respondent
Maria Cortez
456 Main St
Anytown, WA 00100

Copy distribution: WHITE – Respondent YELLOW – Crew leader

☆ U. S. GOVERNMENT PRINTING OFFICE 1979— J653-891-91

Form BC-110. Enumerator's Identification Card

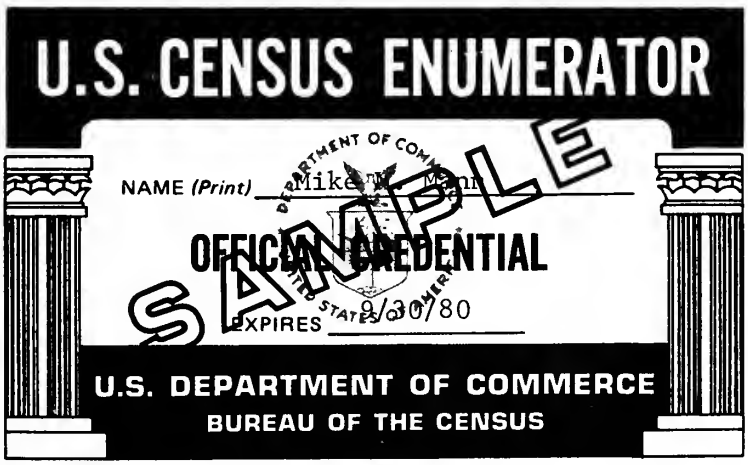

	Colors	
	Printing	Background
U.S. CENSUS ENUMERATOR	White	Red
OFFICIAL CREDENTIAL	Dark blue	White
U.S. DEPARTMENT OF COMMERCE / BUREAU OF THE CENSUS	White	Dark blue

Form D-31. Privacy Act Notice

CENSUS '80 APRIL 1

Some facts and uses

THE 1980 CENSUS:

Determines the number of representatives your area will have in the Congress, the State legislature, county, city, and local elective governing bodies.

Affects the distribution of funds for housing, public works, education, crime prevention, fire protection, job training, and other programs to make life better.

Helps private industry meet the Nation's needs for goods and services by showing where the customers are, where services are lacking, and where workers are available.

Shows us where we are as a nation, and as communities, so we can plan effectively for the challenges of the 1980's.

(Over)

Bureau of the Census
Washington, D.C. 20233

FOR YOUR INFORMATION:

The Bureau of the Census is now taking the 1980 Census of Population and Housing. Your participation is needed to help make the census successful. The answers you provide in the census are grouped together with those of other people into statistical totals.

This census is authorized by title 13, United States Code, and you are required by law to answer the questions to the best of your knowledge. The same law protects the confidentiality of your answers. For the next 72 years only sworn census workers have access to the individual records, and no one else may see them.

Thank you for your cooperation.

For some facts about the 1980 Census, please see other side.

D-31 (5-79)

Form D-101B. Special Place Address Listing Page

Block No. (1)	Control No. (Spot on map) (2)	Name of Special Place (3)	House No. (4)	Street name, Rural Route and Box No., or Lockbox No. (5)	POST OFFICE Name (6a)	State (6b)	ZIP code (6c)	Type of Special Place (7)	Remarks (8)
204	SP-01	GRAND HOTEL	450	GRAND AV	ANYTOWN	WA	00100		
301	SP-02	TWIN PINES MOTEL	525	PINE ST	ANYTOWN	WA	00100		
302	SP-03	NELSON REST HOME	620	FRANKLIN AV	ANYTOWN	WA	00100		
	SP-04								
	SP-05								
	SP-06								
	SP-07								
	SP-08								
	SP-09								
	SP-10								
	SP-11								
	SP-12								
	SP-13								
	SP-14								
	SP-15								
	SP-16								
	SP-17								
	SP-18								
	SP-19								
	SP-20								

FORM D-101B (3-18-79) P

U.S. DEPARTMENT OF COMMERCE
BUREAU OF THE CENSUS

SPECIAL PLACE ADDRESS LISTING PAGE

20th Decennial Census - 1980

(9) D.O. No.	2799
(10) ED No.	0258
(11) ED page	1 OF 1

Form D-102. Master Address Register (cover)

BOOK _____ OF _____ BOOKS

FORM D-102 (12-8-78) O-CT

U.S. DEPARTMENT OF COMMERCE BUREAU OF THE CENSUS

MASTER ADDRESS REGISTER

20th Decennial Census — 1980

NOTICE – Your report to the Census Bureau is confidential by law (title 13, U.S. Code). It may be seen only by sworn Census employees and may be used only for statistical purposes.

1. IDENTIFICATION

a. ED No. (A1)	d. District Office	Code
b. Tract No.	e. County	Code
c. Sample	f. State	Code

2. ASSIGNMENT INFORMATION

		Name	Address	Telephone No.	Date assigned	C.L. District No.
FOLLOWUP 1	a. Crew leader					
	b. Enumerator					
	c. Reassignment enumerator(s)					

3. ENUMERATOR'S DAILY PROGRESS RECORD

FOLLOWUP 1 ENUMERATION	a. Cases assigned	b. Date																				
		c. Completed today																				
		d. Completed to date																				

4. PAYROLL INFORMATION

Method of payment – Enumerator: The entry below shows your method of payment; your payroll form shows the rate of pay.

1 ☐ Piece rate only

2 ☐ Piece rate and mileage

3 ☐ Piece rate, time enroute, and mileage

4 ☐ Hourly rate and mileage

5. MAIL RETURNS

a. Short forms	
b. Long forms	

6. OFFICE USE ONLY

	Precanvass corrections	Postal corrections 1	Postal corrections 2	Merge	Searches	P & H counts	P & H verifications	O.O. local review
a. Date								
b. Initials								

7. POPULATION AND HOUSING REGISTER TOTALS

Total items 17(a) through (c) and 18(a) through (d) entries for all listing pages in this register. If more than one register for this ED, entries for the entire ED are to be entered on the cover of the first book.

	17. Population			18. Housing			
	(a) GQ	(b) Household	(c) Total (a) + (b) =	(a) Vacant ("O" in col. 10)	(b) Unclassified ("U" in col. 10)	(c) Occupied	(d) Total (a) + (b) + (c) =
FOLLOWUP 2			(a) + (b) =				(a) + (b) + (c) =

NOTICE TO FINDER – This book is the property of the United States Government. Please mail it to the address shown below. Postage is prepaid.

FROM: (Finder's name and address)

_____

_____

_____

POSTAGE AND FEES PAID U.S. DEPARTMENT OF COMMERCE COM-202

U.S. MAIL

TO: Chief, Field Division
Bureau of the Census
Washington, D.C. 20233

Form D-102A. Address Listing Page

(A4) Block No. (1)	House No. (2)	Street name (3)	Apartment No. or unit designation (4)	POST OFFICE Name (5a)	State (5b)	ZIP code (5c)	(A2) ☐ Number of units at street address (6)	(A5) Type of form (7)	(A6) Serial number (8)	Date questionnaire checked in (9)	Number of persons Enter "C" if cancelled (10)	(A4) Block number change (11)	Enter "Q" if GQ (12)	Remarks (If multi-unit structure enter name of person in col. 1 of questionnaire) (13)
201	1000	APPLEGATE DR	APT 1	ANYTOWN	WA	00100	4	S	0201	4-4	2			Johnson
201	1000	APPLEGATE DR	APT 2	ANYTOWN	WA	00100	4	S	0202	4-5	3			Miller
201	1000	APPLEGATE DR	APT 3	ANYTOWN	WA	00100	4	L	0203		4			4-17, last resort
201	1000	APPLEGATE DR	APT 4	ANYTOWN	WA	00100	4	S	0204	4-8	2			Rodriguez
201	1002	APPLEGATE DR		ANYTOWN	WA	00100	1	S	0205	4-3	1			
201	1004	APPLEGATE DR		ANYTOWN	WA	00100	1	S	0206	4-4	6			
201	~~1008~~	~~APPLEGATE DR~~		~~ANYTOWN~~	~~WA~~	~~00100~~	~~1~~	~~S~~	~~0207~~		C			4-18, nonexistant
201	4882	WATERTOWN ST		ANYTOWN	WA	00100	1	S	0208	4-5	5			
201	4884	WATERTOWN ST	APT 101	ANYTOWN	WA	00100	3	L	0209	4-5	4			Pawlewicz
201	4884	WATERTOWN ST	APT 102	ANYTOWN	WA	00100	3	S	0210					
201	4884	WATERTOWN ST	APT 103	ANYTOWN	WA	00100	3	S	0211	4-8	3			Worthington
201	1008	CAROLINE ST		ANYTOWN	WA	00100	1	S	0212	4-7	3			
201	1004	CAROLINE ST		ANYTOWN	WA	00100	1	S	0213	4-4	3			
201	1002	CAROLINE ST	APT A	ANYTOWN	WA	00100	4	S	0214		3			4-19, King
201	1002	CAROLINE ST	APT B	ANYTOWN	WA	00100	4	L	0215	4-3	2			Ellis
201	1002	CAROLINE ST	APT C	ANYTOWN	WA	00100	4	S	0216	4-4	1			Giovanni
201	1002	CAROLINE ST	APT D	ANYTOWN	WA	00100	4	S	0217					LMR
201	1002	CAROLINE ST	APT E	ANYTOWN	WA	00100		S	0218					
201									0219					
201									0220					

FORM D-102A (12-13-78) O-CT — U.S. DEPARTMENT OF COMMERCE BUREAU OF THE CENSUS

ADDRESS LISTING PAGE

20th Decennial Census — 1980

(14) D.D. No.	(15) ED No. (A1)	(16) ED page	(17) Population (a) GQ	(b) Household	(c) Total	(18) Housing (a) Vacant ("O" in col. 10)	(b) Unclassified ("U" in col. 10)	(c) Occupied	(d) Total
2799	0309	11 of 21			(a) + (b) =				(a) + (b) + (c) =

☆ U.S. GOVERNMENT PRINTING OFFICE 1979 284 535

Form D-116B. Special Place Sample Selection Listing Page (3/6 Sample)

SPECIAL PLACE SAMPLE SELECTION LISTING

ED No. (1)	Name of special place (2)	Description of housing unit or quarters (For example: doctors' home; nurses' dormitory; etc.) (3)	Type of quarters (HU; NON; or IN) (4)	Within-place control No. (From Sec. E, column 3, Shuttle card) (5)	Address of HU or name of person in NON or IN (6)	Type of form (7)
				SP		S
				SP		L
0124	Freeland's Boarding House	Boarding House	NON	SP 1-1	RmA, Eugene Adams ✓	S
				SP	RmB, Alvin Smith ✓	L
				SP	RmC, Carl Brown ✓	S
				SP	RmD, Gary Jones ✓	L
				SP	RmE, Maria Perez ✓	S
				SP	RmF, Roy White ✓	L
				SP	RmG, Gerald Clark ✓	S
				SP	RmH, Carla Samanski ✓	L
				SP	RmI, James Evans ✓	S
				SP	RmJ, Rita Clay ✓	L
				SP	RmK, Sharon Baker ✓	S
				SP	RmL, Clyde Yoder ✓	L
				SP	RmM, Nellie Rogers ✓	S
				SP		L
				SP		S
				SP		L

FORM D-116B (6-22-78)

Form D-117. Casual Interview Production Record

FORM D-117
(6-2-78)
D-CT

U.S. DEPARTMENT OF COMMERCE
BUREAU OF THE CENSUS

CASUAL INTERVIEW PRODUCTION RECORD
20th Decennial Census – 1980

INSTRUCTIONS – Complete for each day worked. Submit to the Special Place Operations Supervisor at the end of each day.

1. District Office name: Anytown, WA.
Code: 2799
2. Enumerator names: Mike M. Mann
3. Team No.: 6

Place or area (a)	ED (b)	Block(s) (c)	Date (d) Month	Day	Year	Time (e)		Persons enumerated (f)
Local 289 Union Hall	0123	311	5	7	80	From	9:00 a.m. (circled) p.m.	11
1309 46th St						To	10:30 a.m. (circled) p.m.	
State Employment Office	0123	307	5	7	80	From	10:45 a.m. (circled) p.m.	32
1325 45th St						To	12:30 a.m. p.m. (circled)	
Clyde's Pool Hall	0123	404	5	7	80	From	1:30 a.m. p.m. (circled)	7
4305 Forrest Ave						To	3:30 a.m. p.m. (circled)	
NE Corner-Forrest Ave +	0123	402	5	7	80	From	3:45 a.m. p.m. (circled)	19
Sylvan Terr.						To	5:30 a.m. p.m. (circled)	
						From	a.m. p.m.	
						To	a.m. p.m.	
						From	a.m. p.m.	
						To	a.m. p.m.	
						From	a.m. p.m.	
						To	a.m. p.m.	
						From	a.m. p.m.	
						To	a.m. p.m.	
						From	a.m. p.m.	
						To	a.m. p.m.	
						From	a.m. p.m.	
						To	a.m. p.m.	

Form D-263. Census Employment Inquiry (front)

CENSUS EMPLOYMENT INQUIRY FOR THE 1980 CENSUS
Complete this form and bring it to the testing site recorded on the cover on the date shown.

1. Name – *First, middle, last*
Mrs.
Miss
Ms.
Mr.

2a. Telephone number
Area code | Number

2b. Other telephone number where you may be reached
Area code | Number

3a. Mailing address – *Number and street or RFD and box*

Apt. No.

Post office | State | ZIP code

3b. Intersecting streets nearest your home

4. Date of birth *(Month, day, year)*

5. If you are under the age of 18, do you have a high school diploma or equivalent?
☐ Yes ☐ No

6. Social Security Number

7. Do you have a valid driver's license?
☐ Yes ☐ No

8. Although an automobile is not needed for all jobs, do you have one available full time if your assignment requires a car?
☐ Yes ☐ No

9. Some census jobs require the use of a language other than English. Indicate your knowledge of other languages by writing "E" for excellent, "G" for good, or "F" for fair opposite each language you list.

Language	Reading	Speaking	Under-standing	Writing

10. Are you available and willing to work *(Answer all questions)*
a. 8 hours each day, Monday through Friday?
☐ Yes ☐ No
b. Evenings?
☐ Yes ☐ No
c. Saturdays?
☐ Yes ☐ No

11. If you are hired as an enumerator, you will work with the public. Some people may not be willing to give you any information. Some people may be disturbed by census questions; a few may even show hostility. Nevertheless, you must remain calm and tactful.
Are you willing to work under such conditions?
☐ Yes ☐ No

12. If you are hired as an enumerator, you will probably work in the area where you live.
a. Do you feel that you are generally familiar with and can relate to the people in your area?
☐ Yes ☐ No
b. How long have you lived in the area in which you now reside?
☐ One year or less ☐ More than 1 year, but less than 2
☐ More than 2 years, but less than 3 ☐ 3 years or more

13a. Do you claim Veteran's Preference, based on active duty in armed forces, or as a spouse, widow(er), or mother?
☐ Yes ☐ No
b. List dates and branch of all active military service.

From	To	Branch

c. Kind of discharge.
☐ Honorable or general ☐ Other – *Explain in 28*

WORK EXPERIENCE

14. If you have ever been employed by the Federal Government as a civilian, give the total time worked below. Give the name and address of the last agency you worked for and the date of separation in item 28.

Years	Months	Days

15. If you have never worked, mark (X) here → ☐
If you have worked, list your most recent work experiences below.
If presently employed, can the Bureau contact your supervisor?
☐ Yes ☐ No

a. Name and address of employer

Name of immediate supervisor

Tel. No. of immediate supervisor: Area code | Number
Dates of employment *(Mo./Yr.)*: From | To

Title of position and kind of work done

No. and kind of employees supervised | Reason for leaving

b. Name and address of employer

Name of immediate supervisor

Tel. No. of immediate supervisor: Area code | Number
Dates of employment *(Mo./Yr.)*: From | To

Title of position and kind of work done

No. and kind of employees supervised | Reason for leaving

NOTE: THE ACCURACY OF YOUR STATEMENTS WILL BE VERIFIED

Form D-263. Census Employment Inquiry (back)

Answer all questions in Items 16 through 27 below. Read each statement carefully before responding.	*Mark (X) one*	
PHYSICAL ABILITIES	Yes	No
16a. Do you have a visual impairment which is not correctable with glasses or contact lenses, and which makes it difficult for you to read small print?		
b. Do you have a hearing impairment which is not correctable with a hearing aid, and which makes it difficult for you to hear normal person-to-person or telephone conversation?		
c. Do you have a speech impairment which hinders person-to-person or telephone conversation?		
PHYSICAL ACTIVITIES		
17a. Are you able to do considerable walking, including up and down hills and on rough ground?		
b. Are you able to climb stairs?		
c. Are you able to carry 3 lbs. of weight for long periods of time?		
18. Are you willing to work outside in bad weather?		
BACKGROUND INFORMATION		
19. Are you a citizen of the United States? *If No, give country of which you are a citizen and serial number of Alien Registration card in item 28.*		
20. Are you now employed by a Federal agency? *If Yes, explain in item 28.*		
21. Do you receive or do you have a pending application for retirement or retainer pay, pension or other compensation based upon military, Federal civilian, or District of Columbia Government service? *If Yes, explain in item 28.*		
22. Are you an official or an employee of any State, territory, county, or municipality? *If Yes, explain in item 28.*		
23. Are you now barred by the U.S. Civil Service Commission from taking examinations or accepting a civil service appointment? *If Yes, explain in item 28.*		
24. Within the last 5 years, have you ever been fired from any job, or have you quit after being informed that your employer intended to fire you for any reason? *If Yes, in item 28 give the name, address, and telephone number of employer, date, and reason in each case.*		
25a. Have you ever been convicted, forfeited collateral, or are you now under charges for any felony or any firearms, or explosives offense against the law? (A felony is defined as any offense punishable by imprisonment for a term exceeding one year, but does not include any offense classified as a misdemeanor under the laws of a State and punishable by a term of imprisonment of two years or less.)		
b. During the past seven years have you been convicted, imprisoned, on probation or parole or forfeited collateral, or are you now under charges for any offense against the law not included in a above?		
NOTE – When answering a and b above, you may omit: (1) traffic fines for which you paid a fine of $50.00 or less; (2) any offense committed before your 18th birthday which was finally adjudicated in a juvenile court of under a youth offender law; (3) any conviction the record of which has been expunged under Federal or State law; and (4) any conviction set aside under the Federal Youth Corrections Act of similar State authority.		
26. While in the military service were you ever convicted by a general court-martial? *If your answer to 25a, 25b, or 26 is "YES", give details in item 28. Show for each offense: (1) date; (2) charge; (3) place; (4) court; and (5) action taken.*		
27. Does the Bureau of the Census employ any relative of yours (by blood or marriage) in this locality? *If Yes, give in item 28 for each relative: (1) full name; (2) address, including ZIP code; and (3) relationship.*		

28. EXPLANATIONS OR ANSWERS TO ITEMS 1 through 27

Item No.	Explanation

ATTENTION – THIS STATEMENT MUST BE SIGNED

Read the following paragraph carefully before signing this Statement

A false answer to any item in this statement may be grounds for not employing you, or for dismissing you after you begin work, and may be punishable by fine or imprisonment (U.S. Code, title 18, sec. 1001). All statements are subject to investigation, including a check of your fingerprints, police records, and former employers. All the information you give will be considered in reviewing your Statement and is subject to investigation.

CERTIFICATION	Signature *(Sign in Ink)*	Date signed
I CERTIFY that all of the statements made in this application are true, complete, and correct, to the best of my knowledge and belief, and are made in good faith.		

FORM D-263 (10-2-78)

☆ U.S. GOVERNMENT PRINTING OFFICE 1979–657-004/414

Form D-263. Census Employment Inquiry

Census Taker Jobs

Form Approved:
O.M.B. No. 41-S78062

WORK AS A U.S. CENSUS TAKER

The U.S. Census Bureau will conduct the 1980 census in the near future. Local residents will be hired as clerks to work in the Census office and as enumerators to list addresses, visit households, etc.

YOUR TRAINING

You will attend a training session where you will learn about census work. A crew leader or other supervisor will train you, assign your work, answer your questions, and supervise and review your work.

WHEN YOU WILL WORK

Most jobs will last three weeks or longer. Good workers may be employed several months. In most instances, you must be willing to work eight hours each day. If you are hired as an enumerator, you will need to work many evenings and Saturdays. Because of these irregular working hours, it is generally best if you have no other job or other such commitment. Most employees will not work more than 40 hours per week.

YOUR PAY

Enumerators: Enumerators are usually paid a "piece rate" for the number of listings they complete. Average earnings will vary, depending on how much work is completed. For a forty-hour week, you may earn $135 or more. In a few instances, enumerators will be paid by the hour.

All enumerators will be paid a flat fee for training.

Others: Office personnel and crew leaders are paid by the hour. The pay rates for these positions start at $3.35 per hour.

Social Security deductions are taken from your earnings. Federal, State, and local income taxes, where applicable, are also deducted.

YOUR DUTIES

When you have completed your training you will be assigned specific work in the office or in the field. If you work in the field, you will probably work in the same area where you live. Whatever assignment you accept, you will be expected to be accurate and thorough in your work.

When you accept your job, you are expected to stay with it until the work is done.

The information you collect is confidential and must not be disclosed to anyone except your supervisors on the census, and then only in the course of duty.

EQUAL OPPORTUNITY EMPLOYER

The Bureau of the Census does not discriminate on the basis of race, color, religion, national origin, marital status, sex, age, or any nondisqualifying physical handicap.

Can you qualify for Census work? *

1. An applicant should be a citizen of the United States. Noncitizens will be considered only if qualified citizens are unavailable.
2. Applicants must take a written test to show abilities to read, follow written instructions, do arithmetic, and perform in other areas related to census work.
3. One must be physically fit for the job. Enumerators must be able to walk and climb stairs. All jobs require good eyesight to read small print on census forms, and most require the ability to speak and hear normal conversation.
4. An applicant should be at least 18 years old. Persons may be hired at age 16 if they meet conditions of employment set by State and local laws and are high school graduates, or meet certain other requirements.
5. Applicants should be available to work 40 hours a week. Applicants for part-time work will be considered as necessary.
6. Applicants should have a satisfactory work record for the past 5 years. Poor job performance, dishonesty, criminal or immoral conduct, and unreliability could be a basis for disqualification.
7. Conviction of a violation of the law since age 18 for something other than a minor traffic violation could be a basis for disqualification.
8. A census employee must not engage in any partisan political activity during the entire 24 hours of any day of actual employment.
9. Anyone barred from a civil service examination cannot be considered for employment.
10. An applicant must not have been employed as a tax assessor, tax collector, or law enforcement officer within the past 6 months to be eligible for enumerator or crew leader jobs.

***NOTE:** Further information regarding qualifications requirements and hiring information may be obtained from the Census Office at:

FORM D-263 (10-2-78)
P-C-D-CT
EXCEPTION TO SF-171
APPROVED BY NARS 11/78

Privacy Act statement is on reverse side
Please detach and keep this section

U.S. DEPARTMENT OF COMMERCE
BUREAU OF THE CENSUS

Form D-263A. Cultural Familiarity Questionnaire

Form Approved: O.M.B. No. 41-S78062

FORM D-263A
(12-18-79)

U.S. DEPARTMENT OF COMMERCE
BUREAU OF THE CENSUS

CULTURAL FAMILIARITY QUESTIONNAIRE

20th Decennial Census – 1980

1. Name	2. Telephone Area code | Number
3. Address – *Number and street, city, State and ZIP code*	

PLEASE COMPLETE ENTIRE FORM

Most available census jobs are for field workers (enumerators and crew leaders). If you wish to be considered only for office work, mark X in the box below. Note, however, that if you mark this box, you are limiting your chances for employment, since there are very few office jobs available.

I wish to be considered for office work only. ☐

The Bureau of the Census has found that census workers are most effective working in the community in which they live. It has also been found that workers are most effective when they work among people in communities having cultures with which they can identify and are most familiar. There may be several cultures in your community. Please indicate below the culture with which you identify most and are most familiar, by marking this culture with a 1. Then, please indicate a second culture with which you are very familiar. Mark this culture 2. Because cultural familiarity is an important job requirement, failure to indicate those cultures with which you are most familiar may affect your consideration for employment. However, in those cases where applicants who are familiar with a certain culture are unavailable, other applicants may be considered.

I am most familiar with the following cultures in my community. (Mark 1 for most familiar and 2 for very familiar.)

____ Mexican-American	____ Japanese	____ Hawaiian
____ Cuban	____ Chinese	____ Guamanian
____ Puerto Rican	____ Filipino	____ Samoan
____ Other Hispanic	____ Korean	____ White
____ American Indian	____ Vietnamese	____ Black
____ Alaskan Native	____ Asian Indian	____ Other – *Specify* _____

Please detach and keep Privacy Act statement.

Form D-291. Employee Pay Voucher (hourly rate)

WRITE HARD – USE BALL POINT PEN

1. Social Security No.	2. Check digits	3. Type empl.	FORM D-291 (5-8-79) D	U.S. DEPARTMENT OF COMMERCE BUREAU OF THE CENSUS
0 0 0 – 0 0 – 0 0 0 0	0 0	57 – 38		

4. Crew leader district No.	5. ED or assignment No.
6	0102

6. Pay period (Enter dates) From	To	7. Office location	Code
4-6-80	4-19-80	ANYTOWN, USA	0000

EMPLOYEE PAY VOUCHER (DECENTRALIZED)
20th Decennial Census – 1980

WARNING AGAINST FALSE, FICTITIOUS, OR FRAUDULENT CLAIMS – Whoever knowingly makes a false, fictitious, or fraudulent claim against the United States shall be subject to a fine, imprisonment, or both.

All information furnished will be treated in accordance with the Privacy Act of 1974. No information will be released except as authorized by the act.

8. Mark (X) one → 1 ☐ Piece rate | 2 ☐ Piece rate, mileage | 3 ☐ Piece rate, time enroute, mileage | 4 ☒ Hourly rate, mileage $ 4.00 | 5 ☐ Hourly rate $ ____

Section IA – TRAINING FEES FOR ALL ENUMERATORS (EXCEPT QC ENUMERATORS)

Item (a)	Operation code (b)	Rate (c)	Week 1 Number of days or hours (d)	Week 1 Amount (e)	Week 2 Number of days or hours (f)	Week 2 Amount (g)
1. Training fees (daily)		$26.00 per full day		$		$
2. Training fees (hourly)		$3.25 per hour		$		$

Section IB – HOURS WORKED BY OPERATION

CODES		Regular time (a)	(b)	(c)	Overtime (d)	Total regular hours (e)
1. Project →		5315	5315	5315	5315	
2. Operation →		72				
Week 1	3. Sunday 6					
	4. Monday 7	6				6
	5. Tuesday 8	8				8
	6. Wednesday 9	8				8
	7. Thursday 10	5				5
	8. Friday 11	5				5
	9. Saturday 12	8				8
	10. Subtotal →	40				40
Week 2	11. Sunday 13					
	12. Monday 14	3				3
	13. Tuesday 15	6 3/4				6 3/4
	14. Wednesday 16	7				7
	15. Thursday 17	7 3/4				7 3/4
	16. Friday 18	8				8
	17. Saturday 19	6				6
	18. Subtotal →	38 1/2				38 1/2
19. TOTAL BOTH WEEKS →		78 1/2				78 1/2

Section IC – PIECE RATE WORK

	Item (a)	Operation code (b)	Rate (c)	Units (d)	Amount (e)
FOLLOWUP 1	1. Nonresponse long form (occ)	70	$3.80		$
	2. Nonresponse short form (occ)	70	$2.20		$
	3. Vacant (long or short)	70	$1.75		$
FOLLOWUP 2	4. Missing long (occ)	75	$4.05		$
	5. Missing short (occ)	75	$2.40		$
	6. Missing vacant (long or short)	75	$2.00		$
	7. Failed edit (long)	75	$1.90		$
	8. Failed edit (short)	75	$1.45		$
	9. Nonhousehold source	75	$1.55		$
	10. Vacant/delete	75	$2.00		$
	11. Time enroute (when authorized)	43	$ .15		$
	12. GRAND TOTAL →				$

Employee's Certification – I certify that this claim is true and correct; that I have (1) worked the hours on the days indicated, or (2) completed the items indicated for which piece rates are claimed in accordance with instructions and I am entitled to the training fee; and that reimbursements claimed on the attached forms, including telephone charges, were incurred on official business.

Signature of employee: Mike M. Mann — Date: 4/21/80

Supervisor's Certification – I certify that I have reviewed the materials submitted and find the items of work have been done satisfactorily; that the amounts shown for hours worked, piece rate(s), training fees, miles driven, and other charges should be paid.

Signature of supervisor: Linda L. Lee — Date: 4/21/80

Section II – REIMBURSEMENT OF MILEAGE, PER DIEM, OTHER, AND TELEPHONE EXPENSE

	(a)	(b)	(c)	(d)	Total cost (e)
1. Mileage (210)	$34.04	$	$	$	$34.04
2. Per diem (210)	$	$	$	$	$
3. Other (210)	$ .80	$	$	$	$ .80
4. Tel. exp. (230)	$ .10	$	$	$	$ .10
5. GRAND TOTAL →	$34.94	$	$	$	$ 34.94

TERMINATION
Supervisor will mark (X) if the employee is terminated during this pay period → ☐

Remarks

Schedule No.	Audited by	Date	Computed by	Date	Verified by	Date

YROLL OFFICE USE

Write name and address in outlined area below and mark (X) if new address → ☐

Mike M. Mann
456 Mill Road
Anytown, USA 00100

Section III – REGIONAL OFFICE USE

	1. Base	2. Other	3. Gross
	$	$	$
DEDUCTIONS	4. Federal tax	Code	$
	5. FICA		$
	6. State tax	Code	$
	7. Other – Specify		$
	8. NET SALARY →		$
	9. Total reimbursements (from section II) Travel (210) $ ____ Communications (230) $ ____		$
	10. Earned income credit		$
	11. NET PAYMENT →		$

Copy distribution: 1 – Payroll 2 – Audit 3 – District Office 4 – Employee

Form D-291A. Employee's Record of Travel Expenses

FORM D-291A (5-1-79) D

U.S. DEPARTMENT OF COMMERCE
BUREAU OF THE CENSUS

EMPLOYEE'S RECORD OF TRAVEL EXPENSES
(DECENTRALIZED)
20th Decennial Census – 1980

All information furnished will be treated in accordance with the Privacy Act of 1974. No information will be released except as authorized by the act.

1. Employee name: Mike M. Mann
2. D.O. code: 0000
3. Pay period From: 4-6-80 To: 4-19-80
4. Office location: ANYTOWN, USA

Section I – OFFICIAL MILEAGE TRAVELED (If authorized)

Dates of travel (1)	Total miles claimed (2)	MILES BY OPERATION CODE (3)				
		66	70			
4-7	5	5				
4-8	4	4				
4-9	25		25			
4-10	30		30			
4-11	27		27			
4-12	22		22			
4-14	26		26			
4-16	24		24			
4-18	21		21			
TOTAL MILES CLAIMED →	184	9	175			
18.5 TOTAL COST OF MILEAGE AT 17¢ PER MILE – *Enter here and on D-291, section II, line 1* →	$ 34.04	$ 1.67	$ 32.37	$	$	$

Section II – PER DIEM CLAIMED (If authorized)

Departure Date (1)	Departure Time (2)	Points of Travel From / To (3)	Arrival Date (4)	Arrival Time (5)	Per Diem Calculation Item (6)	COST BY OPERATION CODE (7)	
	a.m. / p.m.			a.m. / p.m.	Number of days claimed		
	a.m. / p.m.			a.m. / p.m.			
	a.m. / p.m.			a.m. / p.m.	Daily rate (×)		
	a.m. / p.m.			a.m. / p.m.	TOTAL – *Enter here and on D-291, section II, line 2* → (=)	$	$

Section III – OTHER REIMBURSABLE ITEMS (Road, bridge, or ferry tolls; parking fees; common carrier fees paid cash; other miscellaneous items)

Date (1)	Description of expenditures (2)	COST BY OPERATION CODE (3)		
		66		
4-7	I-95 Toll Road Fee	.40		
4-8	I-95 Toll Road Fee	.40		
TOTAL – *Enter here and on D-291, section II, line 3* →		$ .80	$	$

Section IV – RECORD OF TELEPHONE CALLS

Date (1)	LOCAL CALLS Number of cash calls (2)	LOCAL CALLS Cost per call (3)	TOLL CALLS Places between which calls were made (4)	COST BY OPERATION CODE (5)		
				70		
4-11	1	.10		.10		
TOTAL – *Enter here and on D-291, section II, line 4* →				$ .10	$	$

Remarks

Copy distribution: WHITE – Payroll Office YELLOW – District Office PINK – Employee copy

Form D-292. Employee Pay Voucher

WRITE HARD – USE BALL POINT PEN

1. Social Security No.	2. Check digits	3. Type empl.	FORM D-292 (5-8-79) C	U.S. DEPARTMENT OF COMMERCE BUREAU OF THE CENSUS
0 0 0 – 0 0 – 0 0 0 0	0 0	57-35		

4. Crew leader district No.	5. ED or assignment No.

6. Pay period (Enter dates) From	To	7. Office location	Code
5-11-80	5-24-80	ANYTOWN, WA	2799

EMPLOYEE PAY VOUCHER (CONVENTIONAL)
20th Decennial Census – 1980

WARNING AGAINST FALSE, FICTITIOUS, OR FRAUDULENT CLAIMS – Whoever knowingly makes a false, fictitious, or fraudulent claim against the United States shall be subject to a fine, imprisonment, or both.

All information furnished will be treated in accordance with the Privacy Act of 1974. No information will be released except as authorized by the act.

8. *Mark (X) one* | 1 ☐ Piece rate | 2 ☐ Piece rate, mileage | 3 ☐ Piece rate, time enroute, mileage | 4 ☐ Hourly rate, mileage $____ | $ ☒ Hourly rate $ 3.55

Section IA – TRAINING FEES FOR ALL ENUMERATORS (EXCEPT QC ENUMERATORS)

Item (a)	Operation code (b)	Rate (c)	Week 1 Number of days or hours (d)	Week 1 Amount (e)	Week 2 Number of days or hours (f)	Week 2 Amount (g)
1. Training fees (daily)	66	$26.00 per full day		$		$
2. Training fees (hourly)	66	$3.25 per hour		$		$

Section IB – HOURS WORKED BY OPERATION

CODES	Regular time (a) $316	(b) $316	(c) $316	Overtime (d) $316	Total regular hours (e)
1. Project →					
2. Operation →	37	06			
Week 1: 3. Sunday 11					
4. Monday 12	8				8
5. Tuesday 13	8				8
6. Wednesday 14	8				8
7. Thursday 15	8				8
8. Friday 16	8				8
9. Saturday 17					
10. Subtotal →	40				40
Week 2: 11. Sunday 18					
12. Monday 19	8				8
13. Tuesday 20	8				8
14. Wednesday 21		8			8
15. Thursday 22		8			8
16. Friday 23		8			8
17. Saturday 24					
18. Subtotal →	16	24			40
19. TOTAL BOTH WEEKS →	56	24			80

Section IC – PIECE RATE WORK

Item (a)	Operation code (b)	Rate (c)	Units (d)	Amount (e)
1. Long form (occ)	70	$3.85		$
2. Short form (occ)	70	$1.75		$
3. Vacant (long or short)	70	$1.15		$
4. PEPOC card (form D-707)	70	$ .06		$
5. T-Night Place	70	$1.50		$
6. T-Night Package	70	$ .04		$
7. Time enroute (when authorized)	43	$ .12		$
8. GRAND TOTAL →				$

Employee's Certification – I certify that this claim is true and correct; that I have (1) worked the hours on the days indicated, or (2) completed the items indicated for which piece rates are claimed in accordance with instructions and I am entitled to the training fee; and that reimbursements claimed on the attached forms, including telephone charges, were incurred on official business.

Signature of employee: June J. Jones — Date: 5/26/80

Supervisor's Certification – I certify that I have reviewed the materials submitted and find the items of work have been done satisfactorily; that the amounts shown for hours worked, piece rate(s), training fees, miles driven, and other charges should be paid.

Signature of supervisor: Ida L. Loy — Date: 5/26/80

TERMINATION
Supervisor will mark (X) if the employee is terminated during this pay period → ☐

Section II – REIMBURSEMENT OF MILEAGE, PER DIEM, OTHER, AND TELEPHONE EXPENSE

	(a)	(b)	(c)	(d)	Total cost (e)
1. Mileage (210)	$	$	$	$	$
2. Per diem (210)	$	$	$	$	$
3. Other (210)	$	$	$	$	$
4. Tel. exp. (230)	$	$	$	$	$
5. GRAND TOTAL →	$	$	$	$	$

Remarks

Schedule No.	Audited by	Date	Computed by	Date	Verified by	Date

ROLL OFFICE USE

Write name and address in outlined area below and mark (X) if new address → ☐

Section III – REGIONAL OFFICE USE

1. Base	2. Other	3. Gross
$	$	$

DEDUCTIONS		Code	
	4. Federal tax		$
	5. FICA		$
	6. State tax		$
	7. Other – *Specify*		$
8. NET SALARY →			$
9. Total reimbursements (from section II) Travel (210) $ ____ Communications (230) $ ____			$
10. Earned income credit			$
11. NET PAYMENT →			$

Copy distribution: 1 – Payroll 2 – Audit 3 – District Office 4 – Employee

Form CD-317. Privacy Act Advisory Statement

FORM CD-317
(REV. 10-78)
PRESCRIBED BY
DAO 208-18

U.S. DEPARTMENT OF COMMERCE

PRIVACY ACT ADVISORY STATEMENT

The Privacy Act of 1974 (P.L. 93-579) requires that you be given certain information in connection with: (a) [X] The request for information solicited on the attached form D-263; or (b) [ ] This request for your Social Security Number. Accordingly, pursuant to the requirements of the Act, please be advised:

1. The authority for the collection of this data is (cite U.S. Code, Public Law, or Executive Order): Title 13 U.S.C. Section 23, 24; E.O. 10561, Title 5 U.S.C. Section 301, 1302.

2. Furnishing the information solicited is:

   [X] Mandatory [ ] Voluntary

3. The principal purpose(s) for which the data will be used is:

   By agency officials for purposes of review in connection with appointment, and determination of qualifications and assignment, of an individual.

4. * Other routine uses of the data, in addition to those printed on the reverse of this form, are (if any):

5. * The effects on you, if any, of not furnishing the requested information are:

   Precondition for employment or retention in Federal Government

USCOMM-OC 1233-P7a

* Items 4 and 5 do not apply to requests for SSNs.

PREFATORY STATEMENT OF GENERAL ROUTINE USES

The following routine uses apply to, and are incorporated by reference into, each system of records set forth below:

1. In the event that a system of records maintained by the Department to carry out its functions indicates a violation or potential violation of law or contract, whether civil, criminal or regulatory in nature, and whether arising by general statute or particular program statute or contract, or rule, regulation, or order issued pursuant thereto, or the necessity to protect an interest of the Department, the relevant records in the system of records may be referred, as a routine use, to the appropriate agency, whether federal, state, local or foreign, charged with the responsibility of investigating or prosecuting such violation or charged with enforcing or implementing the statute or contract, or rule, regulation or order issued pursuant thereto, or protecting the interest of the Department.

2. A record from this system of records may be disclosed, as a routine use, to a federal, state or local agency maintaining civil, criminal or other relevant enforcement information or other pertinent information, such as current licenses if necessary to obtain information relevant to a Department decision concerning the hiring or retention of an employee, the issuance of a security clearance, the letting of a contract, or the issuance of a license, grant or other benefit.

3. A record from this system of records may be disclosed, as a routine use, to a federal, state, local, or international agency, in response to its request, in connection with the assignment, hiring or retention of an employee, the issuance of a security clearance, the reporting of an investigation of an employee, the letting of a contract, or the issuance of a license, grant, or other benefit by the requesting agency, to the extent that the information is relevant and necessary to the requesting agency's decision on the matter.

4. A record from this system of records may be disclosed, as a routine use, in the course of presenting evidence to a court, magistrate or administrative tribunal, including disclosures to opposing counsel in the course of settlement negotiations.

5. A record in this system of records may be disclosed, as a routine use, to a Member of Congress submitting a request involving an individual when the individual has requested assistance from the Member with respect to the subject matter of the record.

6. A record in this system of records which contains medical information may be disclosed, as a routine use, to the medical advisor of any individual submitting a request for access to the record under the Act and 15 CFR Part 4b if, in the sole judgment of the Department, disclosure could have an adverse effect upon the individual, under the provision of 5 U.S.C. 552a (f) (3) and implementing regulations at 15 CFR 4b. 6.

7. A record in this system of records may be disclosed, as a routine use, to the Smithsonian Science Information Exchange, Inc.

8. A record in this system of records may be disclosed, as a routine use, to the Office of Management and Budget in connection with the review of private relief legislation as set forth in OMB Circular No. A-19 at any stage of the legislative coordination and clearance process as set forth in that Circular.

9. A record in this system of records may be disclosed, as a routine use, to the Department of Justice in connection with determining whether disclosure thereof is required by the Freedom of Information Act (5 U.S.C. 552).

10. A record in this system of records may be disclosed, as a routine use, to a contractor of the Department having need for the information in the performance of the contract, but not operating a system of records within the meaning of 5 U.S.C. 552a (m).

11. A record in this system of records may be disclosed, as a routine use, when the information qualifies for exemption under the Freedom of Information Act (5 U.S.C. 552) but the Department, in its discretion, determines not to assert the exemption.

FORM CD-317 (REV. 10-78)

USCOMM-OC 1233-P7a

INFORMATION REGARDING DISCLOSURE OF YOUR SOCIAL SECURITY NUMBER UNDER PUBLIC LAW 93-579 SECTION 7 (b)

Disclosure by you of your social security number (SSN) is mandatory to obtain the services, benefits or processes that you are seeking. Solicitation of the SSN by the United States Civil Service Commission is authorized under provisions of Executive Order 9397, dated November 22, 1943. The SSN is used as an identifier throughout your Federal career from the time of application through retirement. It will be used primarily to identify your records that you file with the Civil Service Commission or agencies. The SSN also will be used by the Civil Service Commission and other Federal agencies in connection with lawful requests for information about you from your former employers, educational institutions, and financial or other organizations. The information gathered through the use of the number will be used only as necessary in personnel administration processes carried out in accordance with established regulations and published notices of systems of records. The SSN also will be used for the selection of persons to be included in statistical studies of personnel management matters. The use of the SSN is made necessary because of the large number of present and former Federal employees and applicants who have identical names and birth dates, and whose identities can only be distinguished by the SSN.

Form D-351. Special Place Control Card

FORM D-351
(4-12-79)
C

U.S. DEPARTMENT OF COMMERCE
BUREAU OF THE CENSUS

SPECIAL PLACE
CONTROL CARD

20th Decennial Census – 1980

B. IDENTIFICATION AND CONTROL

1. D.O. code	2. ED No.	3. Block No	4. Control No.	5. Sample
2799	0123	308	2	☒ Yellow (1/6) ☐ Green (3/6)

6. Special place name: County Hospital

7. Mailing address (R.F.D. and Box No. or No and street): 4500 Amon Ave.

A. ENUMERATOR INFORMATION

1. Enumerator name: Mike M. Mann

8. Post Office: Anytown, Wa.

9. ZIP code: 00100

2. Date assigned	3. Date returned	4. C.L.D. No.	10. Telephone No.	11. Special place code
3/28/80	4/10/80	5-1	000-763-7000	74

C. SPECIAL PLACE INFORMATION

1. Type of special place
- ☐ T-night (Hotel, motel, YMCA, campground, etc.)
  - Permanent rooms _____
  - Transient rooms _____
  - Total rooms _____
  - ☐ Permanent place
  - ☐ Transient place
- ☐ M-night place
- ☐ Military place
- ☐ College dorm, residence hall, fraternity house, etc.
- ☒ Other – Specify Gen. Hospital

2. Type of ownership
- ☐ Federal
- ☐ State
- ☒ Local
- ☐ Private

3. Pop. estimate: 145

4. Advance arrangements – *Give name and title of person with whom arrangements were made and describe arrangements below.*

Name: Harold Smith

Title: Administrator

Telephone No.: 000-763-7050

Arrangements – Notes: See Mr. Smith at time of enumeration; staff notified of Census.

Form D-353. Special Place Shuttle Card (front) (Conventional)

FORM D-353
(4-12-79)
C

U.S. DEPARTMENT OF COMMERCE
BUREAU OF THE CENSUS

SPECIAL PLACE
SHUTTLE CARD
20th Decennial Census – 1980

B. IDENTIFICATION AND CONTROL

1. D.O. code	2. ED No.	3. Block No.	4. Control No.	5. Sample
2799	0123	308	2	☒ Yellow (1/6) ☐ Green (3/6)

6. Special place name: County Hospital

7. Mailing address (R.F.D. and Box No. or No. and street): 4500 Amon Ave.

A. ENUMERATOR INFORMATION

1. Enumerator name: Mike M. Mann

8. Post Office: Anytown, Wa.

9. ZIP code: 00100

2. Date assigned	3. Date returned	4. C.L.D. No.	10. Telephone No.	11. Special place code
3/28/80	4/10/80	5-1	000-763-7000	74

C. SPECIAL PLACE INFORMATION

1. Type of special place
- ☐ T-night (Hotel, motel, YMCA, campground, etc.)
  - Permanent rooms ____
  - Transient rooms ____
  - Total rooms ____
  - ☐ Permanent place
  - ☐ Transient place
- ☐ M-night place
- ☐ Military place
- ☐ College dorm, residence hall, fraternity house, etc.
- ☒ Other – Specify Gen. Hospital

2. Type of ownership
- ☐ Federal
- ☐ State
- ☒ Local
- ☐ Private

4. Advance arrangements – Give name and title of person with whom arrangements were made and describe arrangements below.

Name: Harold Smith

Title: Administrator

Telephone No.: 000-763-7050

Arrangements – Notes: See Mr. Smith at time of enumeration; staff notified of Census.

START RECORDING IN SECTION E OF CARD 1 ON REVERSE

D. SPECIAL PLACE TOTALS

Card (1)		Number of HU's enumerated on: All forms (2)	Number of HU's enumerated on: Long forms only (3)	Number of persons IN HU: All forms (4)	Number of persons IN HU: Long forms only (5)	Number of persons IN NON OR IN: All forms (6)	Number of persons IN NON OR IN: Long forms only (7)
CARD 1	Back	4	1	7	3	110	18
CARD 2	Front					23	4
	Back						
CARD 3	Front						
	Back						
CARD 4	Front						
	Back						
CARD 5	Front						
	Back						
CARD 6	Front						
	Back						
CARD 7	Front						
	Back						
CARD 8	Front						
	Back						
CARD 9	Front						
	Back						
CARD 10	Front						
	Back						
TOTAL →		4	1	7	3	133	22

Form D-353. Special Place Shuttle Card (back) (Conventional)

CARD 1 OF 2

E. LISTING OF HOUSING UNITS, NON-INSTITUTIONAL AND INSTITUTIONAL QUARTERS									
Complete description of housing unit or group quarters and street address if different from B.7. For HU's include apartment designation, if any. (For example; doctor's home; 3215 Main St., Apt. 2; nurse's dormitory, 3217 Main St., etc.)	Type (HU, NON, or IN)	Within place control No.	Type of form	Serial No.	Date questionnaire checked in	Number of persons enumerated			
						IN HU		IN NON OR IN	
						All forms	Long forms only	All forms	Long forms only
(1)	(2)	(3)	(4)	(5)	(6)	(7)	(8)	(9)	(10)
Doctor's Apt.; Apt. 1	HU	SP 2-1	L	8001		3	3		
Doctor's Apt.; Apt. 2	HU	SP 2-2	S	8002		2	0		
Dorm Mother - General Hospital - 7904 47th St.	HU	SP 2-3	S	8003		1	0		
Dorm Dean - General Hospital - 7980 47th St.	HU	SP 2-4	S	8004		1	0		
Nurses' Dorm - General Hospital - 7904 47th St.	NON	SP 2-5		8005				6	1
Interns' Dorm - General Hospital - 7980 47th St.	NON	SP 2-6		8006				4	1
General Hospital	NON	SP 2-7		8007				4	0
Tuberculosis (Ward 1)	IN	SP 2-8		8008				5	1
Tuberculosis (Ward 2)	IN	SP 2-9		8009				7	1
Tuberculosis (Ward 3)	IN	SP 2-10		8010				6	1
Drug Treatment (Ward 1)	IN	SP 2-11		8011				2	1
Drug Treatment (Ward 2)	IN	SP 2-12		8012				3	0
Alcoholic Treatment	IN	SP 2-13		8013				8	1
Psychiatric Care (Unit 1)	IN	SP 2-14		8014				5	1
Psychiatric Care (Unit 2)	IN	SP 2-15		8015				9	2
Psychiatric Care (Unit 3)	IN	SP 2-16		8016				6	1
Mental Handicap	IN	SP 2-17		8017				8	1
Deaf (Ward 1)	IN	SP 2-18		8018				11	2
Deaf (Ward 2)	IN	SP 2-19		8019				17	3
Chronically Ill (Ward 1)	IN	SP 2-20		8020				9	1
(11) Total number of persons enumerated this page →						7	3	110	18
(12) Total number of all HU's enumerated on all forms this page →						4			
(13) Total number of HU's enumerated on long forms this page →						1			
Remarks									

FORM D-353 (4-12-79)

Form D-434. Nonhousehold Sources Record (front)

O.M.B. No. 41-S79024; Approval Expires June 1981

FORM D-434
(3-14-79)
D-CT

U.S. DEPARTMENT OF COMMERCE
BUREAU OF THE CENSUS

NONHOUSEHOLD SOURCES RECORD

20th Decennial Census – 1980

NOTICE – Your report to the Census Bureau is confidential by law (title 13, U.S. Code). It may be seen only by sworn Census employees and may be used only for statistical purposes.

Section A – IDENTIFICATION

1. Control No.	2. Name		
123456789	CARL COX		
3. Address – *Number, street, apartment designation*			
1002 APPLEGATE DR			
Post office		State	ZIP code
ANYTOWN		WA	00100
4. Sex	5. Date of birth →	Month	Year
M		01	55
6. Geographic codes →	D.O. number	ED number	Block number
	2799	0309	201

Section B – OFFICE MATCH RESULTS

B1. Match address in Section A, item 3 to MAR
- a. Address not in MAR
  - ☐ No further action
- b. Address in MAR
  - (1) Vacant or deleted
    - ☐ No further action
  - (2) ☒ Occupied – *Enter serial number in B2*
- c. Multi-unit structure in MAR and no apartment designation in Section A, item 3
  - (1) + in column (6) of MAR
    - ☐ No further action
  - (2) 9 or less in column (6) of MAR – *Match surname in Section A, item 2 to column (13) of MAR*
    - (a) Name does not match
      - ☐ No further action
    - (b) Name matches – *Enter serial number in B2*

B2. Find and search questionnaire with serial number → 0205
- a. Missing
  - ☐ No further action
- b. "Refusal" on front of questionnaire
  - ☐ No further action
- c. Name in Section A, item 2 found on questionnaire
  - ☐ No further action
- d. ☐ Name in Section A, item 2 not found on questionnaire – *Enter names of persons on questionnaire in Section E, line numbers 1 through 10 and enter charecteristics in Section E, item 3*

Section C – TELEPHONE FOLLOWUP INTERVIEW

1. Followup clerk name	2. Telephone number	Source
	765-4321	☒ Questionnaire ☐ Not available ☐ Other _____

3. Record of calls

Call (a)	Date / Time (b)	Remarks (c)
1		
2		
3		
4		
5		

☐ Unable to contact – *Assign to Followup 2*

4a. Good (morning, afternoon, evening). I am *(your name)* from the U.S. Bureau of the Census. We are calling households in the area to make sure everyone was counted in the 1980 Census.
Is this *(read address from Section A)*?
- ☐ Yes – *Continue with 4b*
- ☐ No – *End interview and mark the "Unable to contact" box in item 3*
- ☐ Refusal – *Continue with 4b*

b. To whom am I speaking?
- ☐ Same person as in Section A – *Skip to 4d*
- ☐ Different person than in Section A
  - *Enter name* → _____ *and continue with 4c*
- ☐ No name given – *Continue with 4c*

c. Do you know *(name of person in Section A)*?
- ☐ Yes – *Continue with 4d*
- ☐ No – *Skip to Section E, Check Item A*

d. Did *(name of person in Section A/you)* live here April 1, 1980?
- ☐ Yes – *Add name to Section E, item 2, complete Section E, items 3a–e and continue with Section E, Check Item A*
- ☐ No – *Continue with Section E, Check Item A*

Section D – PERSONAL VISIT INTERVIEW

1. I am *(your name)* from the U.S. Bureau of the Census; here is my identification. We are visiting addresses to check to see if everyone was counted in the 1980 Census.
What is your name?
- ☐ Same person as in Section A – *Skip to 3*
- ☐ Different person than in Section A
  - *Enter name* → _____ *and continue with 2*
- ☐ No name given – *Continue with 2*

2. Do you know *(name of person in Section A)*?
- ☐ Yes – *Continue with 3*
- ☐ No – *Skip to Section E, Check Item A*

3. Did *(neme of person in Section A/you)* live here on April 1, 1980?
- ☐ Yes – *Enter name in Section E, item 2, complete Section E, items 3e–e and continue with Section E, Check Item A*
- ☐ No – *Continue with Section E, Check Item A*

Form D-434. Nonhousehold Sources Record (back)

Section E – HOUSEHOLD ROSTER

CHECK ITEM A — Does the roster in item 1 below include the name of the person to whom you are speaking?
- ☐ Yes – *Continue with 1*
- ☐ No or no name given – *END INTERVIEW*

1. These are the persons we have listed as living here on April 1, 1980. *(Read list)*

Was anyone else living here on that date?
- a. ☐ Yes – *Enter names in 2 below and complete 3a–e for each person.*
- b. ☐ No – *END INTERVIEW*

3. *ASK FOR ALL PERSONS ADDED*

Line No.		a. What is . . .'s relationship to *(name of person on line 1 of item 1)*?	b. What is . . .'s sex?	c. Is . . . 1 – White? 2 – Black or Negro? 3 – Japanese? 4 – Chinese? 5 – Filipino? 6 – Korean? 7 – Vietnamese? 8 – Indian (Amer.)? *Specify tribe* 9 – Asian Indian? 10 – Hawaiian? 11 – Guamanian? 12 – Samoan? 13 – Eskimo? 14 – Aleut? 15 – Other? – *Specify*	d. What is . . .'s date of birth? *(mo./yr.)*	e. Is . . . of Spanish/Hispanic origin or descent? 1 – No, not Spanish/Hispanic 2 – Yes, Mexican, Mexican-Amer., Chicano 3 – Yes, Puerto Rican 4 – Yes, Cuban 5 – Yes, other Spanish/Hispanic
1	Curtis Cox		M		3-45	
2	Cathy Cox	wife	F		6-48	
3						
4						
5						
6						
7						
8						
9						
10						

2. *Enter names below and complete 3a–e for each person.*

1						
2						
3						
4						
5						

Section F – CENSUS ADDITIONS

1. Person in Section A added?
- ☐ Yes
- ☐ No

2. Other persons added?
- ☐ Yes – *Enter line numbers from Section E, item 2*

Line numbers ____ , ____ , ____ , ____
- ☐ No

Remarks

FORM D-434 (8-14-79)

Appendix 5D. Staffing Calendars

The 1980 census staffing calendars were large, wall-size sheets; these have been truncated for purposes of publication here.

Centralized

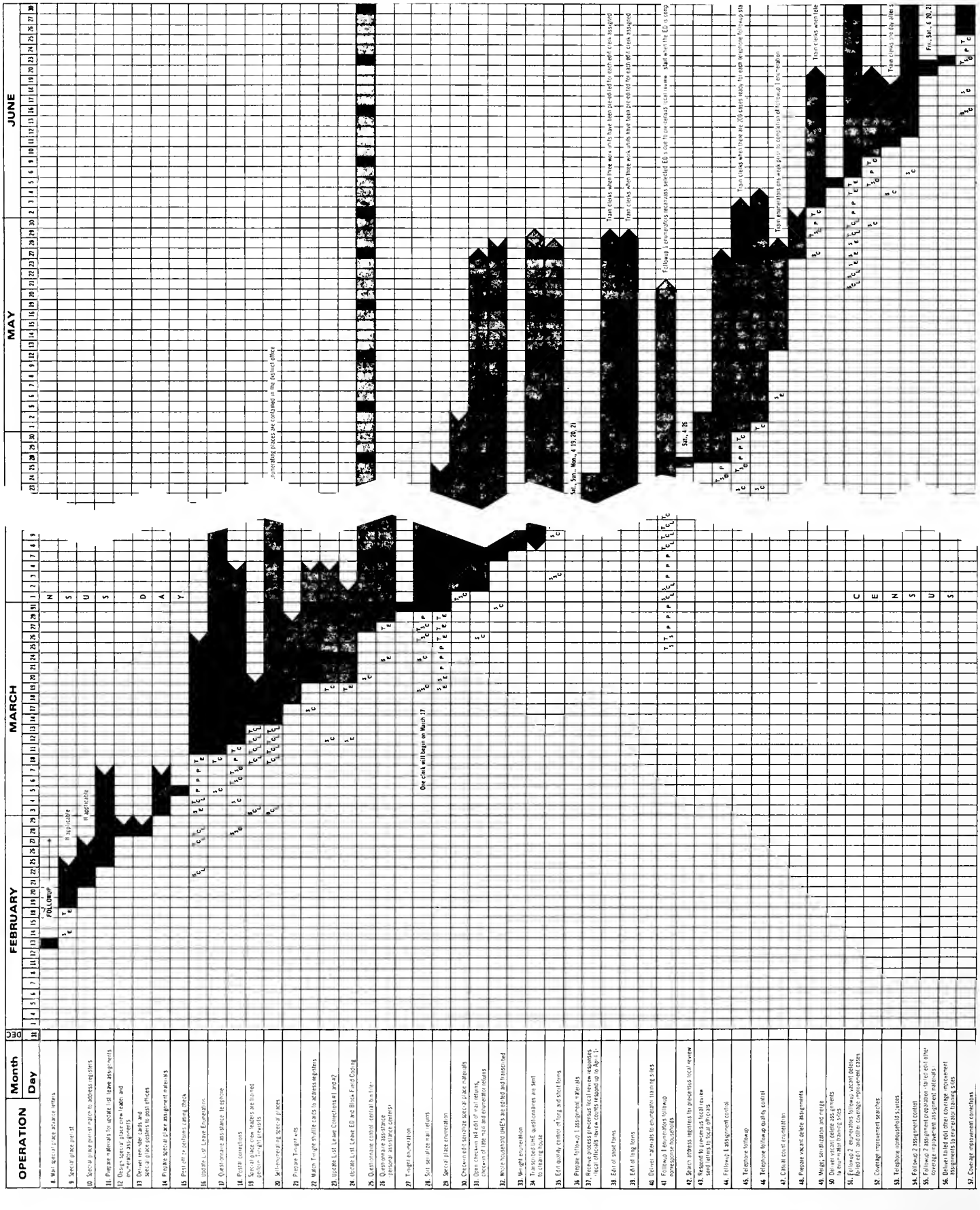

Decentralized

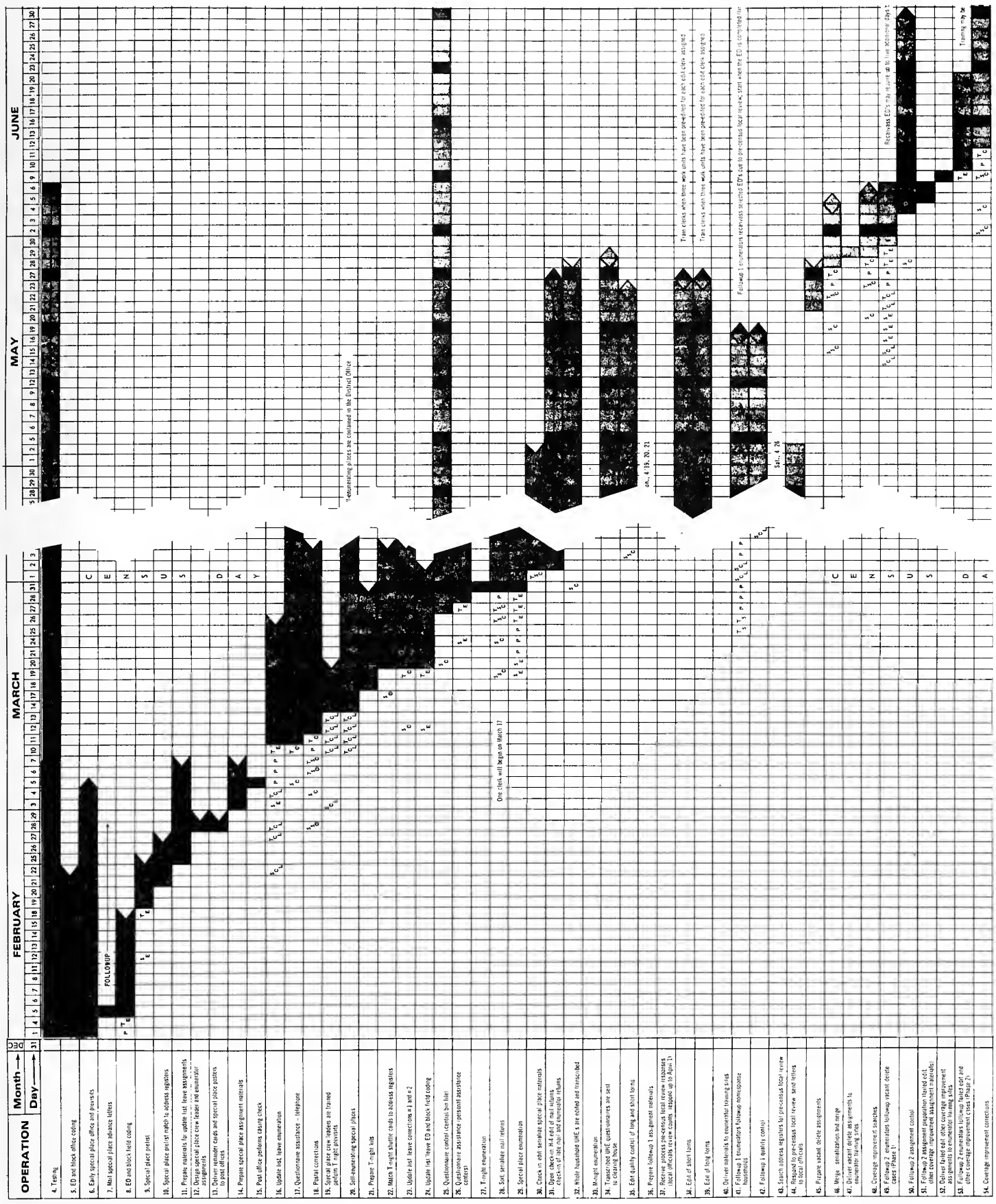

* U.S. Government Printing Office: 1987 0-181-076 (40214)

Superintendent of Documents
U.S. Government Printing Office
Washington, D.C. 20402

Official Business
Penalty for Private Use, $300

CB/Bureau of the Census Library
5 0673 01150161 9

U.S.MAIL

POSTAGE AND FEES PAID
U.S. DEPARTMENT OF COMMERCE
COM-202

Special Fourth-Class
Rate—Book